APPROXIMATE MINIMUM DIMENSIONS FOR NON-ATC CONTROLLER EQUIPMENT CABINET*				
TYPE	HEIGHT(H)	WIDTH(W)	DEPTH(D)	USE
4 PHASE POLE MOUNTED	49"	30"	17"	8 PHASE CONTROLLER-4 PHASE OPERATION
4 PHASE BASE MOUNTED	55"	38"	26"	8 PHASE CONTROLLER-4 PHASE OPERATION
8 PHASE BASE MOUNTED (OR 4 PHASE WITH MASTER)	55"	44"	26"	8 PHASE CONTROLLER-8 PHASE OPERATION (OR 4 PHASE OPERATION W/ MASTER)

* LARGER SIZES MAY BE REQUIRED FOR LOCATIONS WITH ADDITIONAL EQUIPMENT.

APPROXIMATE MINIMUM DIMENSIONS FOR ATC CONTROLLER EQUIPMENT CABINET*				
TYPE	HEIGHT(H)	WIDTH(W)	DEPTH(D)	CHANNELS (OUT)
A - 356 ATC	46"	24"	20"	16
B - 352 ATC	67"	24"	30"	32
C - 353 ATC	54"	45"	29"	32
D - P65 ATC/350 ATC	67"	44"	26"	32
E - P44 ATC	56"	44"	26"	32

* LARGER SIZES MAY BE REQUIRED FOR LOCATIONS WITH ADDITIONAL EQUIPMENT.

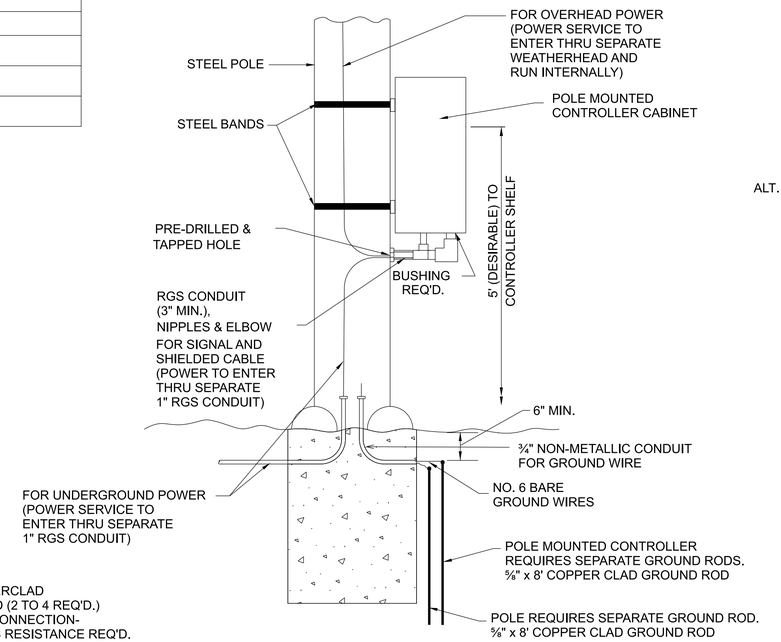

TYPICAL DETAIL FOR STEEL STRAIN POLE MOUNTED CONTROLLER CABINET (OVERHEAD OR UNDERGROUND POWER SERVICE ENTRANCE)

(SEE SHEET T-SG-10 FOR FOUNDATION DETAILS)

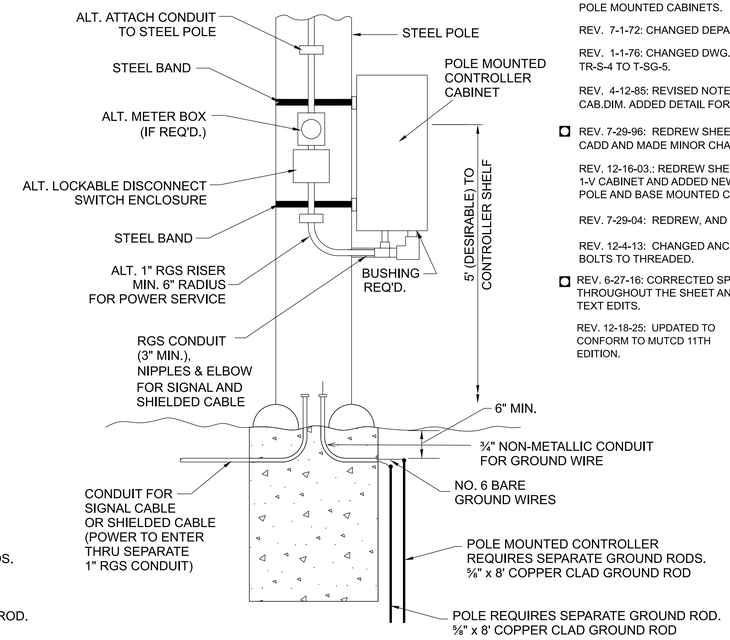

ALTERNATE TYPICAL DETAIL FOR STEEL STRAIN POLE MOUNTED CONTROLLER CABNET (OVERHEAD POWER SERVICE ENTRANCE)*

(SEE SHEET T-SG-10 FOR FOUNDATION DETAILS)

* TYPICAL POWER SERVICE TO BE RUN INTERNALLY DOWN POLE FROM WEATHERHEAD AT TOP OF POLE.

REV. 6-7-72: ADDED NOTE CONCERNING POLE MOUNTED CABINETS.

REV. 7-1-72: CHANGED DEPARTMENT NAME.

REV. 1-1-76: CHANGED DWG. NO. FROM TR-S-4 TO T-SG-5.

REV. 4-12-85: REVISED NOTE UNDER APPROX. CAB.DIM. ADDED DETAIL FOR MOUNTING BRACKET.

REV. 7-29-96: REDREW SHEET ON CADD AND MADE MINOR CHANGES.

REV. 12-16-03.: REDREW SHEET.DELETED TYPE 1-V CABINET AND ADDED NEW DETAILS FOR POLE AND BASE MOUNTED CABINETS.

REV. 7-29-04: REDREW, AND REDESIGNED SHEET.

REV. 12-4-13: CHANGED ANCHOR BOLTS TO THREADED.

REV. 6-27-16: CORRECTED SPELLING ERRORS THROUGHOUT THE SHEET AND MADE MINOR TEXT EDITS.

REV. 12-18-25: UPDATED TO CONFORM TO MUTCD 11TH EDITION.

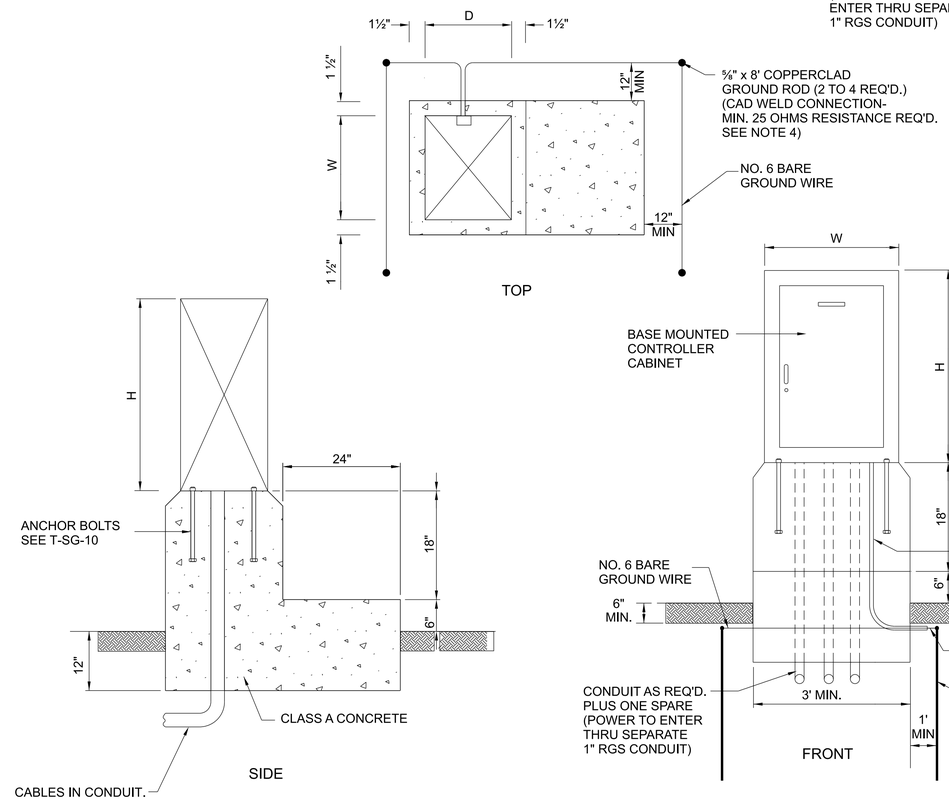

TYPICAL DETAIL OF BASE FOR CONTROLLER CABINET

BASE MOUNTED CABINET NOTES:

1. THE BASE MOUNTED CABINET IS TO BE SITUATED IN THE OPTIMUM POSITION FOR VIEWING THE CONTROLLER OPERATION AND THE ON STREET SIGNAL DISPLAYS SIMULTANEOUSLY. CABINET PLACEMENT SHOULD BE SUCH THAT CABINET DOOR, WHEN FULLY OPENED, IS WITHIN EXISTING/PROPOSED ROW.
2. ALL CONDUIT TO UTILIZE LARGE SWEEP RADII (MINIMUM 6" RADIUS).
3. FOUNDATIONS TO HAVE ONE SPARE 2" CONDUIT. SPARE CONDUIT TO EXTEND 24" BEYOND FOUNDATION AND BE CAPPED.
4. UP TO 4 GROUND RODS MAY BE REQUIRED. CONTRACTOR TO INSTALL NUMBER OF GROUND RODS REQUIRED TO ACHIEVE MINIMUM 25 OHMS RESISTANCE A MINIMUM OF 2 GROUND RODS ARE REQUIRED.

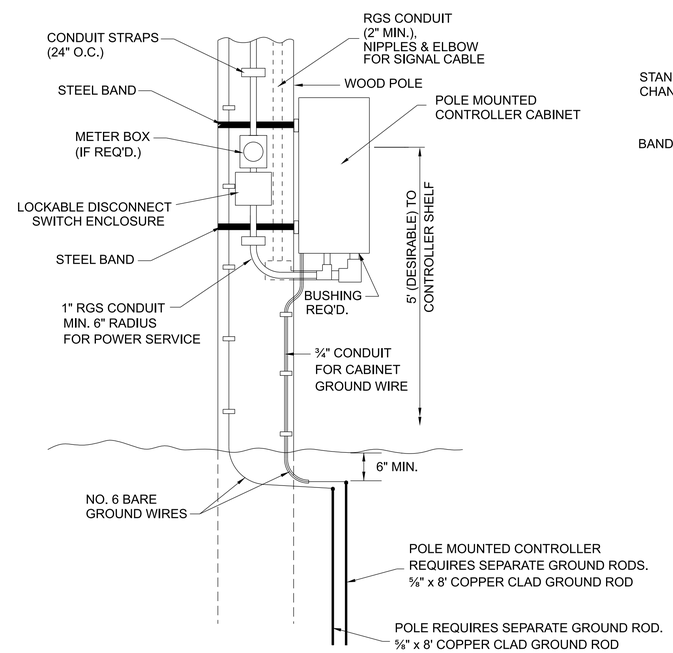

TYPICAL DETAIL FOR WOOD POLE MOUNTED CONTROLLER CABINET

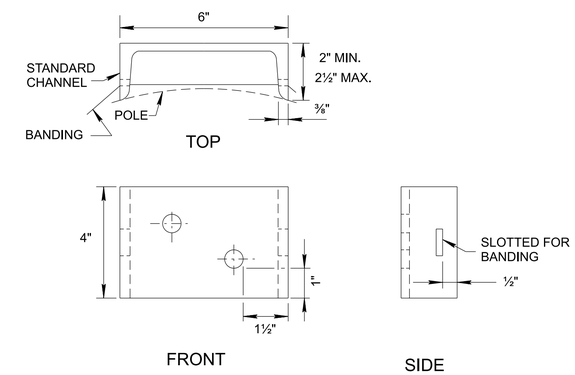

MOUNTING BRACKET FOR POLE MOUNTED CONTROLLER CABINET

(TWO PER CABINET)

MINOR REVISION -- FHWA APPROVAL NOT REQUIRED.

STATE OF TENNESSEE
STANDARD DRAWING
DEPARTMENT OF TRANSPORTATION

CONTROLLER CABINET DETAILS

JAN 1970 | T-SG-5

NOT TO SCALE

10/15/2025 7:13:53 AM
H:\26\26180 - Tennessee DOT Road Design Manual\004 - TDOT Traffic Design Updates\design_CAD\Signals (SG)\TSG5.DGN