SDG 9:

Joints and Bearings

Chapter 9

Tennessee Department of Transportation October 20, 2026



Table of Contents

Section 1 General Requirements 1
Section 2 Code Requirements 1
Section 3 Creep and Shrinkage Movements 1
Section 4 Uniform Temperature Movement 1
9-401.00 Design Criteria 2
9-401.01 Fixed Bent/Pier Thermal Force 2
9-401.02 Integral Bent/Pier Thermal Force 2
Section 5 Expansion Joints 3
9-501.00 General 3
9-502.00 Design Guidelines and Selection 3
9-503.00 Strip-Seal Expansion Joints 5
9-504.00 Modular Expansion Joints 5
9-505.00 Cover Plates 5
9-505.01 Sidewalk Cover Plates 5
9-505.02 Bridge Rail and Parapet Cover Plates 5
Section 6 Bearings 5
9-601.00 General 5
9-602.00 Design Guidelines and Selection 6
9-603.00 Rotation Requirements 6
9-604.00 Leveling Pads 6
9-605.00 Steel-Reinforced Elastomeric Pads 7
9-606.00 Steel Fixed Bearings 7
9-607.00 Steel Expansion Bearings 7
Appendix A. Standard Details for Steel Fixed and Expansion Bearings 8

Table of Figures

Figure 1. Standard Details for Steel Fixed and Expansion Bearings 9

List of Tables

Table 1. Thermal Movement Calculation Parameters 1

Version History and Revision Summary

Version history and a summary of revisions are given in the table below. Minor editorial revisions may not be included in the summary.

Version	Revision Summary
06302022	Initial Release
10112023	Revised Table 1 and Section 9-503.00; Added Version History and Revision Summary
10202026	Revised Sections 9-502.00, 9-505.01, and 9-505.02

Section 1 General Requirements

Joints and bearings shall be designed to accommodate all calculated movements and forces expected throughout the life of the bridge. Joints and bearings shall also be designed to accommodate regular maintenance activities that will prolong the life of these devices.

Section 2 Code Requirements

Unless otherwise noted, the design of joints and bearings shall be in accordance with the latest editions of the *AASHTO LRFD Bridge Design Specifications* and the *AASHTO Guide Specifications for LRFD Seismic Bridge Design*.

Section 3 Creep and Shrinkage Movements

The movements from creep and shrinkage strains are largely mitigated by TDOT's rule that prestressed beams must be at least 90 days old prior to pouring the slab.

Section 4 Uniform Temperature Movement

Bridges are subject to heat transfer from the ambient air temperature and radiant heat from direct sunlight. Bridges of different structure types expand and contract at different rates. Concrete structures react more slowly than steel structures due to the concrete structures' larger thermal mass. This makes them less susceptible to large temperature swings over a short amount of time. Variations in the average temperature of the bridge superstructure result in thermal expansion and contraction.

The amount of thermal movement shall be calculated according to Table 1. The values in Table 1 are based on Procedure A in AASHTO 3.12.2. Tennessee shall be assumed to be in a moderate climate for the thermal movement calculation. In AASHTO Table 3.4.1-1, two load factors are given for the thermal (TU) load. According to AASHTO 3.4.1, the larger of the two factors shall be used for movement calculations and the smaller value for all other effects. Therefore, when determining the total opening of expansion joints and designing expansion bearing devices, multiply the total thermal movement from Table 1 by 1.20.

Beam Type	Temperature Range	Coefficient of Thermal Expansion	Total Thermal Movement
Concrete (normal weight)	25º to 95º F	0.0000060/ºF	0.00504 in./ft.
Steel	0º to 120º F	0.0000065/ºF	0.00936 in./ft.

Table 1. Thermal Movement Calculation Parameters

9-401.00 Design Criteria

D = distance from theoretical fixed center of structure to bent/pier in question (ft.)

Δ = total thermal movement due to expansion and contraction (in.)

For prestressed concrete bridges: Δ = 0.00504D

For steel bridges: Δ = 0.00936D

L = distance from top of cap to top of footing (or point of fixity for drilled shafts and pile bents) (ft.)

P = force required to produce Δ/2 displacement (k)

E = 1000 ksi for concrete column in long term deflection

I = combined moment of inertia of all columns (ft^4)

9-401.01 Fixed Bent/Pier Thermal Force

Assuming the bent/pier to act as a cantilever with the thermal force at the top (free end):

$$\frac{\Delta}{2} = \frac{PL^3}{3EI} \tag{1}$$

Solving for P:

$$P = \frac{3EI\Delta}{2L^3} \tag{2}$$

9-401.02 Integral Bent/Pier Thermal Force

Assuming the bent/pier to act as a cantilever with the thermal force at the top (free to move laterally but not rotate):

$$\frac{\Delta}{2} = \frac{PL^3}{12EI} \tag{3}$$

Solving for P:

$$P = \frac{6EI\Delta}{L^3} \tag{4}$$

The thermal force, P, in equations (1) through (4) is referred to as TU in AASHTO. AASHTO 3.4.1 specifies a TU load factor of 1.0 when a refined analysis is completed for the piers/bents. In lieu of a refined analysis, use a reduced modulus of elasticity of 1000 ksi when computing the thermal force. It is office policy to assume some foundation rotation and reduce the column moment resulting from the thermal force by half. Use a TU load factor at the Strength Limit State of 0.50 (AASHTO Table 3.4.1-1).

Section 5 Expansion Joints

9-501.00 General

Expansion joints shall prevent water, deicing chemicals, and debris infiltration to the substructure elements below. Expansion joints shall also provide a relatively smooth riding surface between approach pavements and the structure, or adjacent structural elements.

Due to maintenance concerns with expansion joints, it is preferred to implement jointless construction wherever possible. Standard Drawing STD-1-5 makes provision for an expansion joint at the juncture of the approach pavement and roadway. This joint prevents bridge thermal movements from damaging the roadway pavement.

9-502.00 Design Guidelines and Selection

The need for an expansion joint will be determined based on the amount of bridge movement.

Movement calculations shall consider superstructure type, contributing length, structure curvature, construction phasing, fixity between superstructure and substructure, superstructure rotations, and substructure stiffness. Skews, horizontal and vertical alignment, grade, and cross-slopes shall be considered when selecting and designing a joint system.

Expansion joints shall be sized to accommodate the thermally induced movement, rotations, and deformations imposed on the structure. The required movement shall be rounded up to the nearest inch.

A length of deck sufficient to accommodate the expansion joint shall blocked out at each joint location. Blocked-out areas adjacent to expansions joints shall be poured after the rest of the deck is poured and the expansion joint has been properly installed and set. The joint openings shall be set based on the ambient air temperature at the time the joint is permanently affixed to the structure. The expansion joint shop drawings shall include installation joint opening widths for the applicable temperature range in 10^0 F increments.

When the total anticipated movement at an abutment is less than 2 inches and the abutment is not restrained against movement, no joint is required, and the abutment shall be constructed integrally with the superstructure.

When the total anticipated movement at an abutment is less than ¼-inch, the abutment shall be constructed integrally with the superstructure regardless of the support conditions.

When the total movement at an abutment is between ¼-inch and 2 inches and the abutment is restrained against movement and rotation or the total movement is between 2 inches and 4 inches, a strip-seal expansion joint shall be used with the following exception. The use of integral abutments when the total anticipated movement is greater than 2 inches may be approved in specific cases by the Director, and if approved, the required pile embedment into the abutment beam shall be increased to 2 feet. The required movement is 4 inches for all strip-seal expansion joints. Add SDG 11 note 90 to the bridge plans.

When the total movement is greater than 4 inches, a modular expansion joint shall be used. The required movement shall be rounded up to the nearest inch. Add SDG 11 note 91 to the bridge plans.

When a joint is required, it shall exhibit the following qualities:

1. Accommodate the full range of structure movements without exceeding the required movement at deck surface level when at maximum opening
2. Provide proper anchorage and structural capacity to resist the anticipated loads.
3. Have good riding qualities
4. Not cause undue stresses in the bridge due to thermal expansion and contraction
5. Be reasonably silent and free of vibration
6. Resist snowplow damage and traffic abrasion
7. Facilitate maintenance and repair
8. Be leakproof.

In the past, TDOT has mandated that joint anchors be welded straps and prohibited the use of welded stud connectors as anchors. Joint fabricators such as Mageba offer proprietary modular joints that do not employ strap anchors. The approval of the Director is required before

permitting the contractor to use proprietary expansion joints that do not use welded strap anchors.

Concrete sealer shall be applied to substructures coinciding with expansion joint locations. Add SDG 11 note 52 to the bridge plans.

9-503.00 Strip-Seal Expansion Joints

Strip-seal expansion joints consist of a preformed neoprene gland mechanically locked into steel edge rails embedded into concrete on both sides of an expansion gap. Strip-seal expansion joints provide a cost-effective joint system that allows easy neoprene gland replacement when needed. Strip-seal expansion joints shall be in accordance with Standard Drawings STD-3-1 and STD-3-2. The Contractor shall submit shop drawings and calculations stamped by an Engineer licensed in the State of Tennessee for review and approval prior to fabrication.

9-504.00 Modular Expansion Joints

Modular expansion joints are complex structural assemblies that consist of multiple pre-molded neoprene strip-seals held into place by separate extruded steel beams.

The Contractor shall submit shop drawings and calculations stamped by an Engineer licensed in the State of Tennessee for review and approval prior to fabrication.

Modular expansion joints shall be installed as one continuous unit. Field splicing of modular joints is allowed with approval of the Director. Where field splicing is required, all splices shall be fully welded. Bolted splices are not allowed.

9-505.00 Cover Plates

9-505.01 Sidewalk Cover Plates

Sidewalks at all expansion joints shall have steel cover plates. Sidewalk cover plates shall be compliant with the Americans with Disabilities Act (ADA) requirements as applicable.

9-505.02 Bridge Rail and Parapet Cover Plates

Bridge rails and parapets at modular expansion joints shall have steel cover plates in accordance with Standard Drawings STD-1-2SS and STD-1-4SS.

Section 6 Bearings

9-601.00 General

Bridge bearings transfer permanent and transient loads from the bridge superstructure to the substructure. Bearings shall also accommodate anticipated thermal movements and rotations.

Several bearing types are available. These include leveling pads, steel-reinforced elastomeric bearings, steel fixed bearings, and steel expansion bearings. Disk bearings have also been used occasionally in Tennessee.

9-602.00 Design Guidelines and Selection

All bearings along the same centerline of bearing shall be the same size and type. This is due to potential damage from differing deflection and rotational characteristics.

All bridges with bearings shall be designed for the thermal movement as determined in accordance with Section 4.

The Designer shall verify that the force required to translate an expansion bearing is less than that required to deflect the substructure to which it is mounted. If the substructure deflects at less force than it takes for the bearing device to slide or deflect, then the bearing device serves no purpose.

When anchor bolts are used at bearing devices, they shall be fully tensioned for the anchor bolts and bearing device to function properly. This requires attention to proper detailing of the anchor bolt projections, thread lengths, and washer sizes.

Elastomeric leveling pads under base plates may experience a reduced coefficient of friction when loaded that may promote the bearing slipping at the base plate/leveling pad interface. Consideration should be given to fixing the base plate against lateral movement utilizing a method that discounts any friction between the base plate and the elastomeric leveling pad.

Steel bearing components shall not be constructed of weathering steel (painted or unpainted.)

Anchor bolts shall not be bolted to the top plate of a steel-reinforced elastomeric bearing, which would subject the anchor bolts to significant moments.

9-603.00 Rotation Requirements

Add 0.005 radians to the calculated rotations of the structure to account for uncertainties in the fabrication and placement of the bearings. See AASHTO 14.4.2.1.

9-604.00 Leveling Pads

Leveling pads are plain elastomeric pads used to help equally distribute bearing pressures over the bearing area due to irregularities in the bearing surfaces and to prevent girder-to-support contact due to anticipated girder rotations during the deck pour. Rotation restrictions other than

preventing girder-to-support contact shall not be considered. Normally these pads are 1/8-inch to ½-inch thick.

9-605.00 Steel-Reinforced Elastomeric Pads

Steel-reinforced elastomeric pads shall be designed using Method A in AASHTO 14.7.6 or Method B in AASHTO 14.7.5.

The minimum bearing height shall be 2 inches to facilitate inspection and removal of the bearing.

The plans shall clearly show the orientation of the bearings relative to the centerline of the beam and the substructure centerline of bearing.

Sole plates and base plates shall be a minimum of 1-inch thick and shall not be constructed of weathering steel.

Anchor bolt holes in base plates shall be oversized ¾-inch larger than the anchor bolt diameter to accommodate construction tolerances.

9-606.00 Steel Fixed Bearings

For non-expansion bearings where the design requirements for steel-reinforced elastomeric bearing pads cannot be met, steel fixed bearings shall be used unless an alternate bearing type is approved by the Director. The typical details for steel fixed bearings are given in Figure 1 of Appendix A. The information shown in Figure 1 is typical but may have to be modified for special cases.

9-607.00 Steel Expansion Bearings

For expansion bearings where the design requirements for steel-reinforced elastomeric bearing pads cannot be met, steel expansion bearings shall be used unless an alternate bearing type is approved by the Director. The typical details for steel expansion bearings are given in Figure 1 of Appendix A. The information shown in Figure 1 is typical but may have to be modified for special cases.

Appendix A. Standard Details for Steel Fixed and Expansion Bearings

STEEL EXPANSION BEARINGS

(ALL MATERIAL SHALL BE A709 GRADE 50 UNLESS OTHERWISE NOTED.)

LOCATION	NUMBER REQUIRED	R (SERVICE I)	E	FW	BASE PLATE		SELF LUBRICATING PLATE		SLIDER PLATE		PIN ASSEMBLY	
					BL	BW	CL	CW	SL	SW	PL	AL

R = REACTION IN KIPS
FW = BOTTOM FLANGE WIDTH IN INCHES
E = TOTAL EXPANSION IN INCHES
CW = [R / (2 (FW + 4"))] + E
SW = BW + E
BW = (THE GREATER VALUE OF) CW + 2" OR BW = R / BL OR 12" MINIMUM

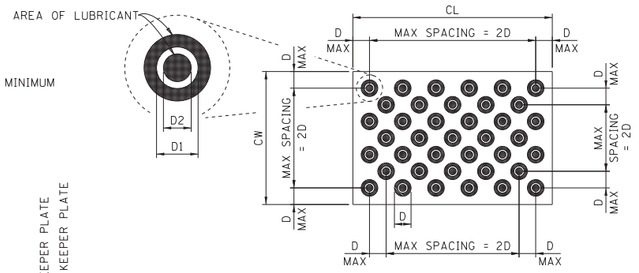

PLAN OF BRONZE/ COPPER ALLOY PLATE

AL = TOTAL CROSS-SECTIONAL AREA OF LUBRICANT
(0.25) (CW) (CL) ≤ AL ≤ (0.30) (CW) (CL)
RECESSES SHALL BE TREPANNED TO A DEPTH OF ¼"
FABRICATOR SHALL SUBMIT DETAIL OF BRONZE/ COPPER ALLOY PLATE FOR APPROVAL

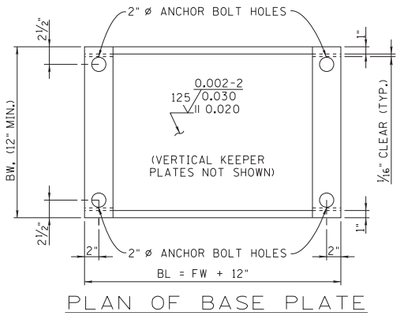

PLAN OF BASE PLATE

(CAUTION: DO NOT FINISH COPPER PLATE OR BRONZE CASTING TOP OR BOTTOM)

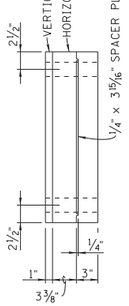

END VIEW

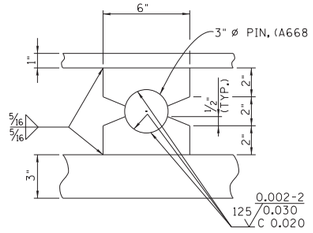

PIN & BEARING ASSEMBLY

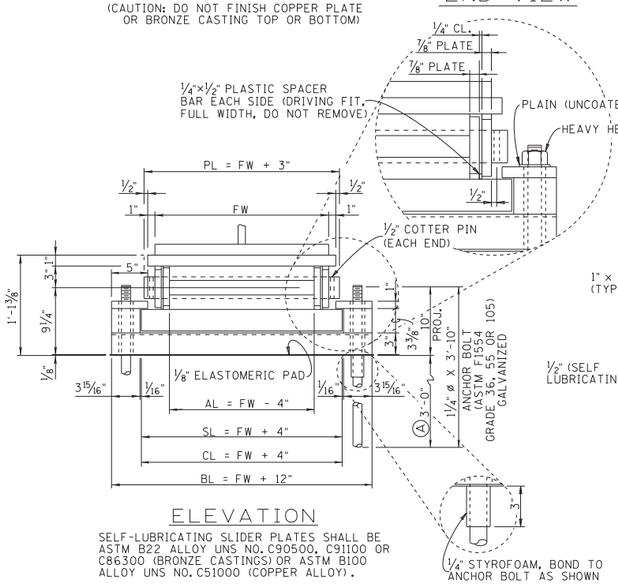

ELEVATION

SELF-LUBRICATING SLIDER PLATES SHALL BE ASTM B22 ALLOY UNS NO. C90500, C91100 OR C86300 (BRONZE CASTINGS) OR ASTM B100 ALLOY UNS NO. C51000 (COPPER ALLOY).

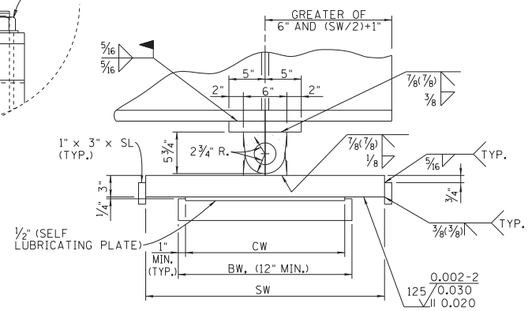

END ELEVATION

FINISH NOTE:
ALL MACHINED AND/OR ROLLED SURFACES IN DIRECT CONTACT WITH THE SELF-LUBRICATING COPPER ALLOY PLATE (ASTM B100 ALLOY UNS NO. C51000) OR BRONZE CASTING (ASTM B22 ALLOY UNS NO. C90500, C91100, OR C86300), SHALL MEET THE ANSI SURFACE ROUGHNESS REQUIREMENTS AS DEFINED IN ASME B46.1 SURFACE ROUGHNESS, WAVINESS, AND LAY, SECTION 1. MAXIMUM ROUGHNESS HEIGHT SHALL BE 125 MICROINCHES AND MACHINE MARKS ARE TO BE PARALLEL TO THE DIRECTION OF MOVEMENT ON THE MOVING PART.

DESIGNED BY _____ DATE _____
DRAWN BY _____ DATE _____
SUPERVISED BY _____ DATE _____
CHECKED BY _____ DATE _____

STEEL FIXED BEARINGS

(ALL MATERIAL SHALL BE A709 GRADE 50 UNLESS OTHERWISE NOTED.)

LOCATION	NUMBER REQUIRED	R (SERVICE I)	FW	BASE PLATE		SPACER PLATE		PIN ASSEMBLY	
				BL	BW	SL	SW	PL	AL

R = REACTION IN KIPS
FW = BOTTOM FLANGE WIDTH IN INCHES
BW = R / BL OR 12" MINIMUM
SW = BW - 6"

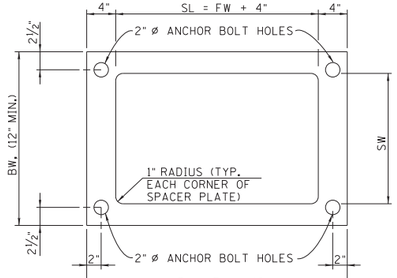

PLAN OF BASE PLATE

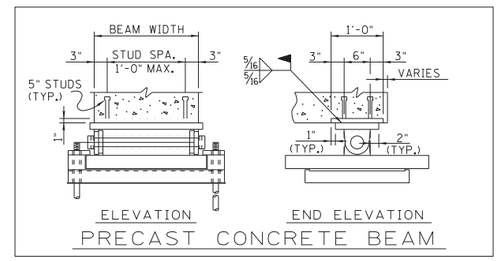

ELEVATION END ELEVATION

PRECAST CONCRETE BEAM

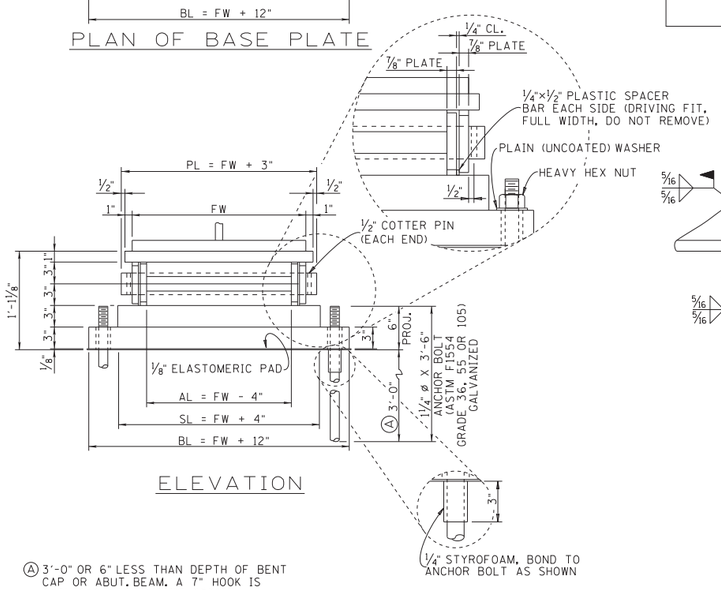

ELEVATION

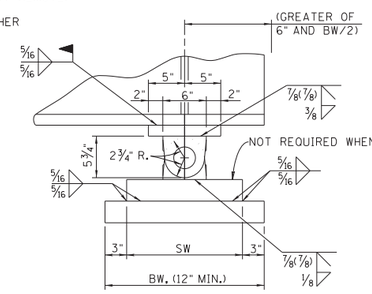

END ELEVATION



SEISMIC HOOK DETAIL

GENERAL NOTES:

NOTE: PIN AND BOTTOM OF SLIDER PLATE SHALL BE LUBRICATED WITH MOLYKOTE 3402-C LF ANTI-FRICTION COATING.
NOTE: ANCHOR BOLTS SHALL BE TENSIONED TO PRODUCE 60% OF ANCHOR BOLT YIELD STRESS.
NOTE: ANCHOR BOLTS SHALL BE GALVANIZED ACCORDING TO ASTM F2329 OR MECHANICALLY GALVANIZED TO ASTM B695.
NOTE: ALL EXPOSED SURFACES OF ASSEMBLED BEARING DEVICES SHALL BE PAINTED. THE COLOR OF THE TOP COAT SHALL BE BROWN, AMS-STD-595A, COLOR NO. 30059.

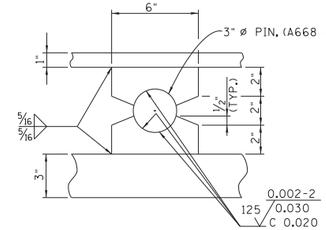

PIN & BEARING ASSEMBLY

CONST. NO. _____

PROJECT NO.	YEAR	SHEET NO.

REVISIONS

NO.	DATE	BY	BRIEF DESCRIPTION

STATE OF TENNESSEE
DEPARTMENT OF TRANSPORTATION

CORRECT _____ ENGINEER OF STRUCTURES

SDG 9

10-06-23

FIGURE 1. STANDARD DETAILS FOR STEEL FIXED AND EXPANSION BEARINGS