SDG 8:

Bents and Piers

Chapter 8

Tennessee Department of Transportation September 11, 2026

Table of Contents

Section 1 Types of Bents / Piers 1
8-101.00 Introduction 1
8-102.00 Hammerhead Bents 1
8-103.00 Multi–Post Bents 2
8-104.00 Integral Bents 3
8-105.00 Wall Piers 5
8-106.00 Pile Bents 6
Section 2 Design Practice of Bridge Bents 7
8-201.00 Materials 7
8-202.00 Design of Bent Caps 8
8-202.01 Integral Caps 8
8-203.00 Design of Columns 8
8-203.01 Slenderness Effects 8
8-203.02 Aesthetics 8
8-203.03 Struts 9
8-203.04 Additional Requirements 9
8-204.00 Design of Pile Bents 9
8-205.00 Riser Blocks 11
Section 3 Leap Bridge Concrete 11
Appendix A. Integral Steel Box Cap Examples 21
Works Cited 25

Table of Figures

Figure 1 - Hammerhead Bent 2
Figure 2 - Multi-Post Bent 3
Figure 3 - Integral Box Cap at Centerline of Girder 4
Figure 4 - Steel Box Cap Connection 5
Figure 5 - Wall Pier 6
Figure 6 - Pile Bent 7
Figure 7 – Multiplier for All Live Load Cases 12
Figure 8 – Resistance Factors 13
Figure 9 – Impact and Reduction 14
Figure 10 – Crack Control 15
Figure 11 - Cover 16
Figure 12 – Column Slenderness 17
Figure 13 – Moment Magnification Parameters 18
Figure 14 – Shear and Torsion Calculations 19
Figure 15 - Footing 20
Figure 16 – Integral Steel Box Cap Example 1 22
Figure 17 – Integral Steel Box Cap Example 2A 23
Figure 18 – Integral Steel Box Cap Example 2B 24

Version History and Revision Summary

Version history and a summary of revisions are given in the table below. Minor editorial revisions may not be included in the summary.

Version	Revision Summary
06052023	Initial Release
02032025	Revised 8-101.00 and 8-205.00; Added new Figure 7 and renumbered subsequent figures; Revised Works Cited; Added Table 1
09112026	Revised 8-203.04, 8-205.00

Section 1 Types of Bents / Piers

8-101.00 Introduction

Intermediate supports between bridge spans have a mixed naming terminology. The most common practice among engineers is to refer to these supports as bents unless they are located within or near a water crossing. In this case, they are referred to as piers. For simplicity, the terms "bent" and "pier" will be used interchangeably within this document.

Typical bents consist of three primary components: cap, column, and footing. Many variations of each component are often used by TDOT based on geometric constraints, bridge geometry, location, and aesthetics. The most common bents and piers used by TDOT are the following:

- Hammerhead bents
- Multi-post bents
- Integral piers
- Wall piers
- Pile bents

All bents must resist vertical and lateral loads transferred from the superstructure to the foundation(s). Like all other components of the bridge, bents shall be designed in accordance with the latest edition of the AASHTO LRFD Bridge Design Specifications (AASHTO) with the HL-93 live load increased by 10% (multiplied by 1.1) in addition to all load factors specified by AASHTO for all applicable load combinations. Traditionally, TDOT designs bents as ductile members to resist seismic forces. See SDG 14 for bent seismic design guidelines. See SDG 10 for bent foundation design guidelines.

8-102.00 Hammerhead Bents

Hammerhead bents consist of one or more columns having a tapered cantilever-type cap as shown in Figure 1. Many variations in geometry exist when designing hammerhead bents. Columns can be circular, rectangular (filleted or chamfered), hexagonal, tapered, etc. This wide variety of options often makes hammerhead bents the most aesthetically pleasing option among bent types.

Most hammerhead bents only require one column to support the cap. For wider bridges, double or triple (or more) hammerhead bents may be required. This is usually more economical than multi-post bents, which would typically have more columns than a hammerhead bent for the same length of cap.

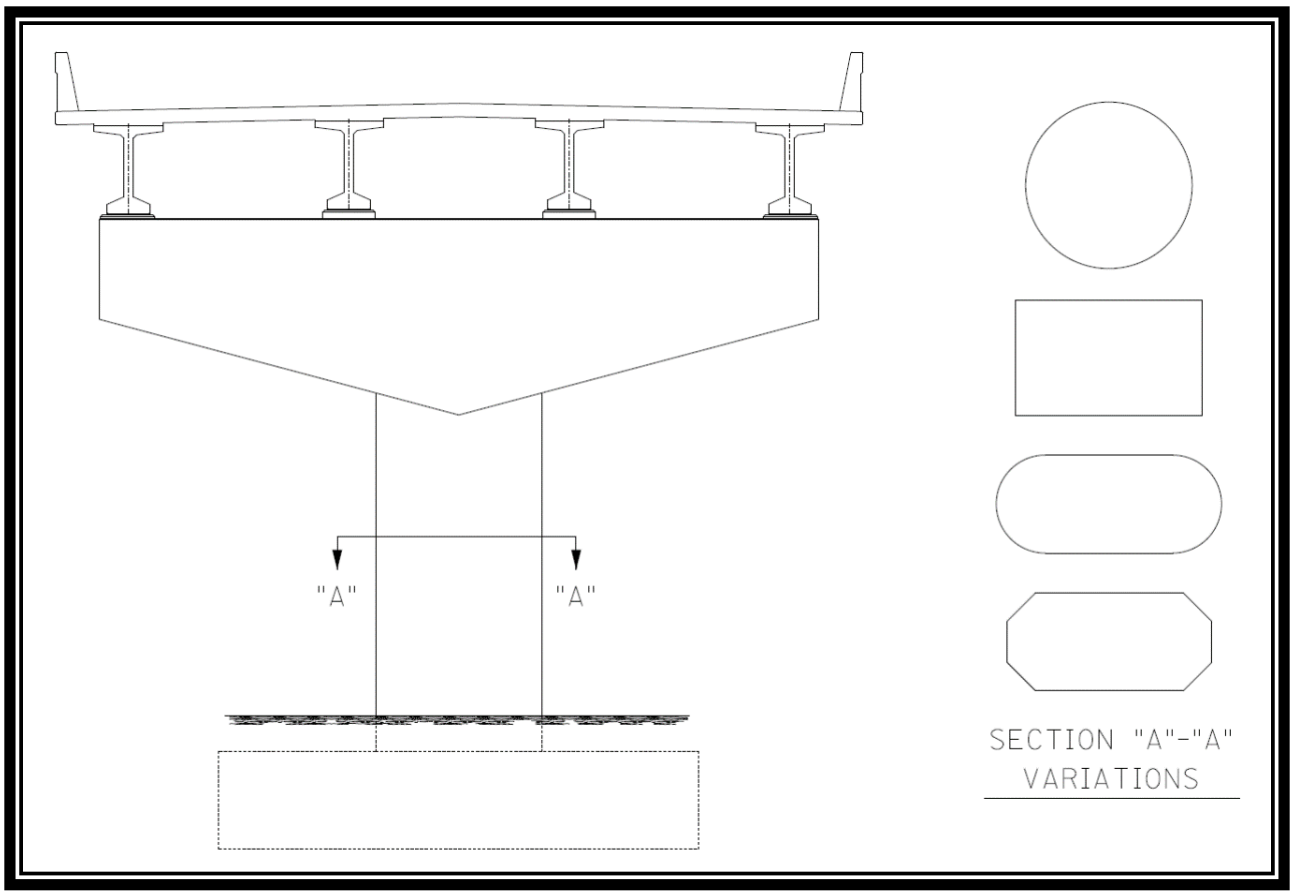

Figure 1 - Hammerhead Bent

8-103.00 Multi–Post Bents

A multi-post bent with a constant depth cap is shown in Figure 2. As in this example, the cap cantilevers are often tapered to enhance aesthetics. Columns can be formed as any of the shapes shown in Figure 1 but are commonly circular or rectangular.

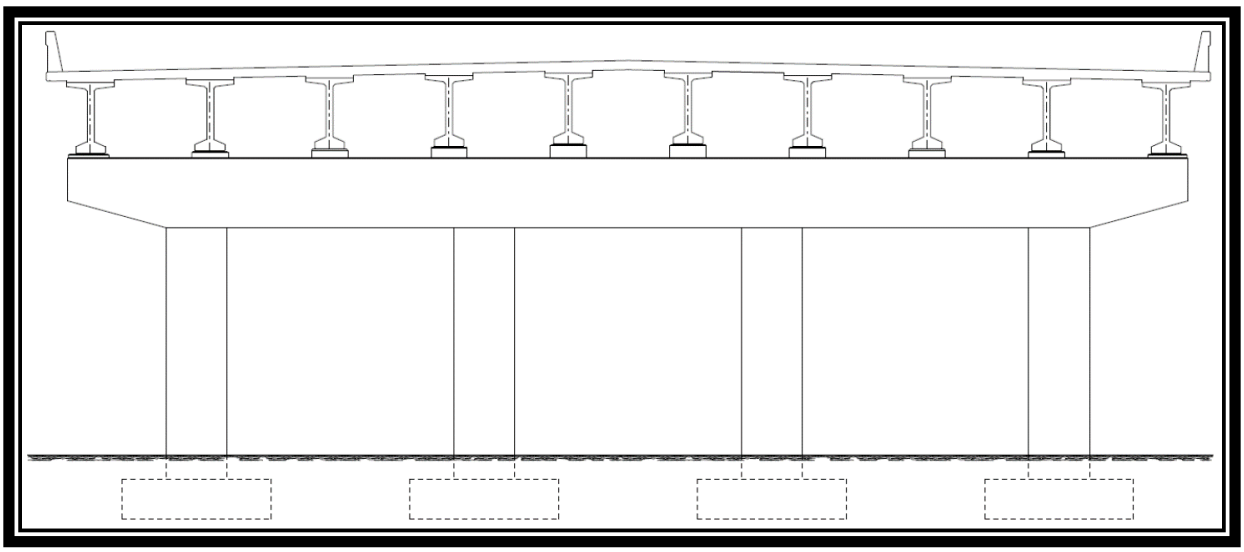

Figure 2 - Multi-Post Bent

Multi-post bents can be used with any bridge type and size but are typically used to support wider bridges. They can be advantageous for bridges that must be constructed in phases. For bridge replacements, construction phasing often determines the placement of columns and foundations to avoid disturbing existing bridge foundations while they are still in service. Multi-post bents offer such an array of geometric options that they can be used to support a partially constructed bridge superstructure, avoid existing foundations, and still be constructed in a way that is aesthetically pleasing.

8-104.00 Integral Bents

Integral bents are named based on their connection between the cap and the superstructure. Instead of the girders bearing on top of the cap, the girders frame into the sides of the cap. A steel box is typically used for the cap section in conjunction with steel girders, as shown in Figure 3.

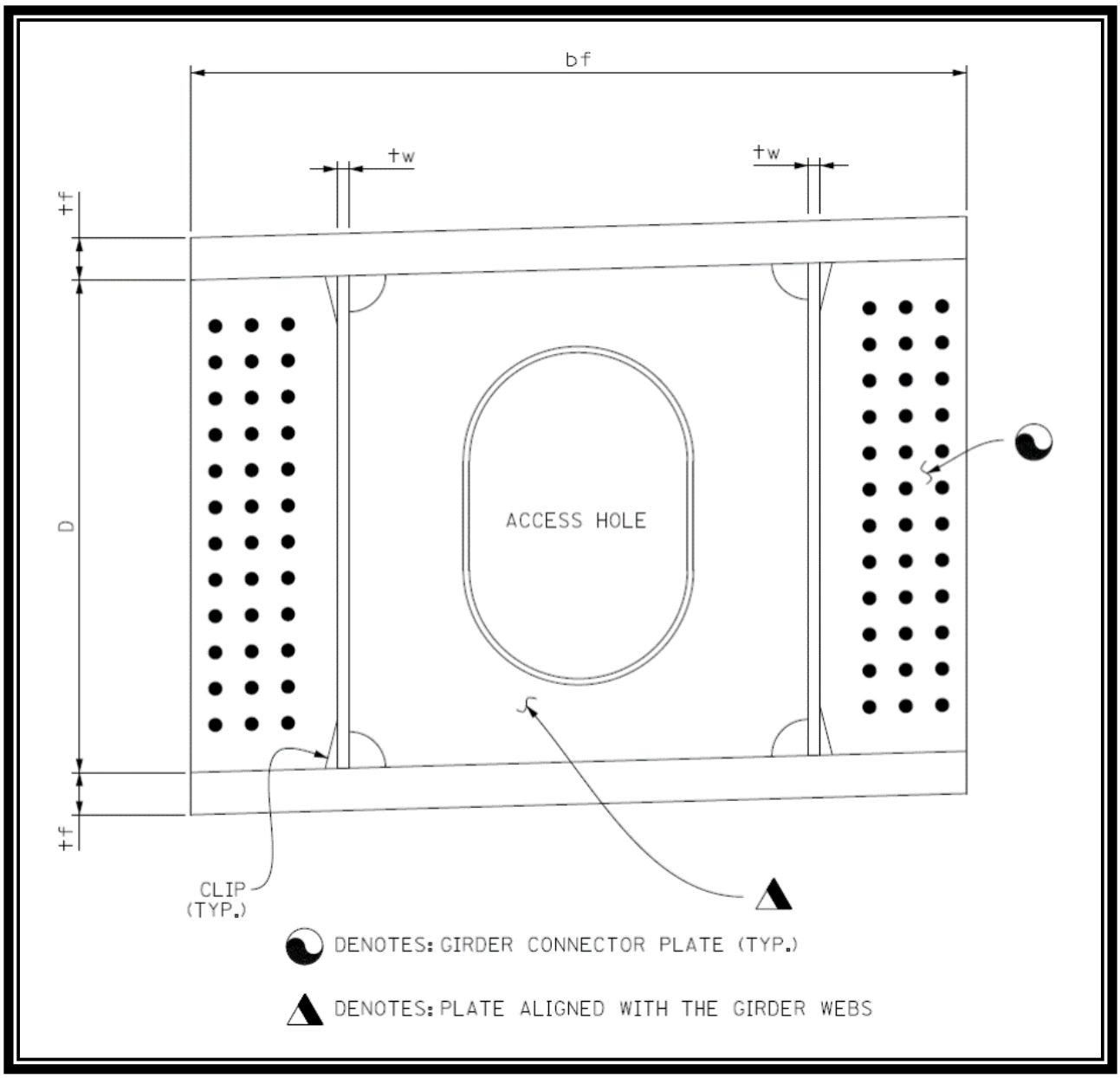

Figure 3 - Integral Box Cap at Centerline of Girder

Integral bents can consist of one or more columns. Figure 4 shows TDOT's typical method of cap-to-column connection when a steel box cap is used.

Integral bents are typically only used at grade crossings where there is inadequate vertical clearance for any other bent type. The use of integral bents shall be approved by the Design Manager.

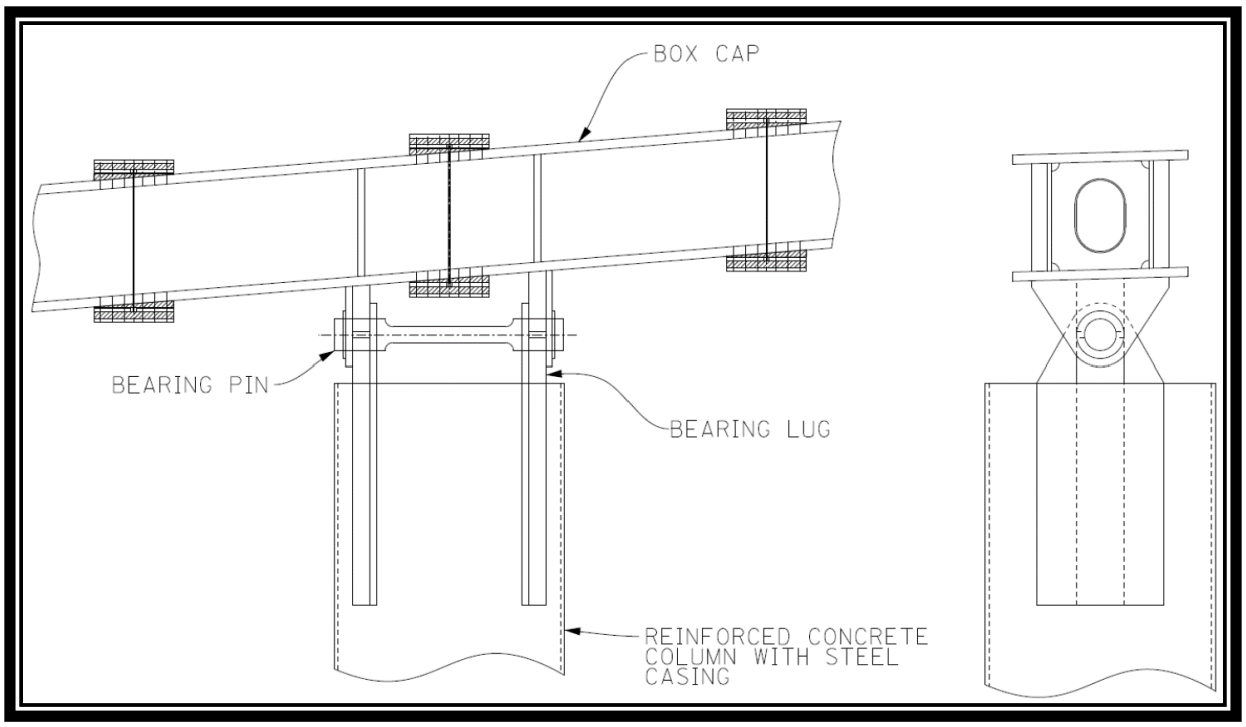

Figure 4 - Steel Box Cap Connection

8-105.00 Wall Piers

Wall piers feature a continuous wall supporting the cap for nearly the entire cap length. A typical wall pier is shown in Figure 5.

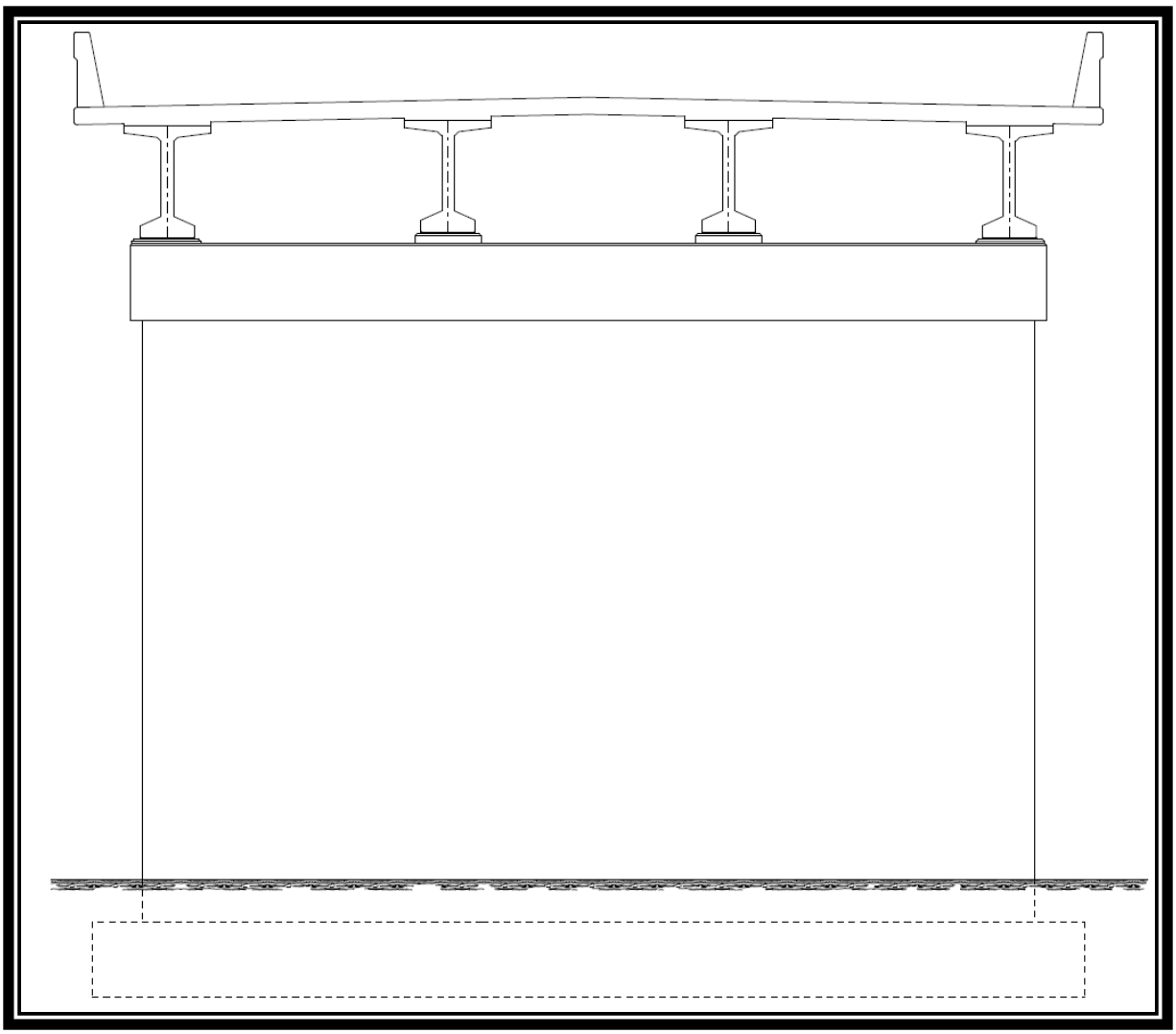

Figure 5 - Wall Pier

Wall piers are most commonly used as short piers bearing on rock for hydraulic crossings. They are also occasionally used for railroad crossings when piers of "heavy construction" are required due to the railroad's horizontal clearance requirements.

8-106.00 Pile Bents

In some situations, it is preferable to support the bridge solely on the foundation piles and a pile cap as shown in Figure 6. This concept presents a simpler design procedure and reduced construction times. Pile bents should be considered at stream crossings where environmental impacts would be high if typical footings were used. Where analysis reveals the potential for scour, the piles shall have a minimum embedment of 15 feet below the 500-year scour elevation. See SDG 10 Section 8 for more information. For a deep scour line, footings could be very difficult and expensive to construct. Therefore, it is preferable to use a pile bent.

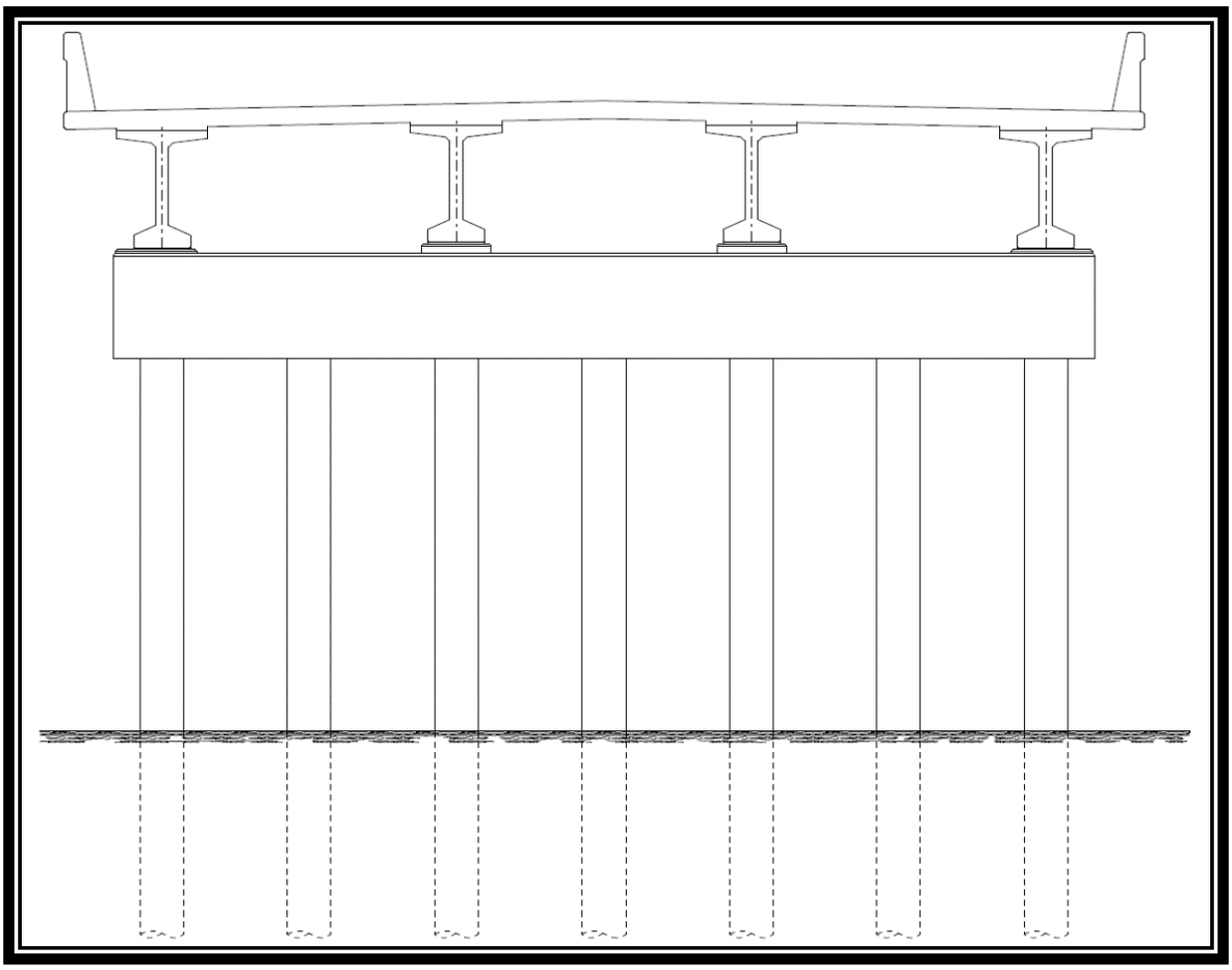

Figure 6 - Pile Bent

Piles for pile bents require a minimum pile embedment of 10 feet to establish sufficient soil lateral resistance. If the piles for pile bents cannot be driven at least 10 feet, predrilling into the rock layer shall be required. See SDG 10 Appendix B.

Pile bents are most commonly used in west Tennessee where bedrock is located far deeper than a pile can be practicably driven. In this situation, friction piles are required to achieve vertical resistance. Steel pipe piles shall be used for pile bents unless an alternate pile type is approved by the Director.

Section 2 Design Practice of Bridge Bents

8-201.00 Materials

Concrete for bent components is typically TDOT Class "A" with a design strength of 3,000 psi. Use of higher strength concrete is allowed with approval of the Design Manager. Higher strength concrete increases shear capacity. This can be helpful when trying to limit bent cap and footing

dimensions. When higher strength concrete is used (except in drilled shafts), it shall be designated as Class "X" concrete. Concrete for drilled shafts is Class "SH-SCC" and is quantified as "Drilled Shaft (SH-SCC) Concrete".

Steel reinforcement shall be ASTM A615 Grade 60 with the following exceptions:

1. ASTM A706 Grade 60 is required for column longitudinal reinforcement for Seismic Design Category (SDC) D or any time a pushover analysis is done to verify the displacement capacity.
2. Higher grades of reinforcement may be used with the approval of the Design Manager.

See SDG 10 for material grades of pile foundations. For drilled shaft foundations, refer to TDOT Special Provision 625 for material specifications.

8-202.00 Design of Bent Caps

The design software *LEAP Bridge Concrete* shall be used to design bent caps unless an alternate program is approved by the Design Manager. *LEAP Bridge Concrete* can model any of the bent caps listed in Section 1 with the exception of integral caps.

8-202.01 Integral Caps

Integral caps shall be designed using hand calculations, *Visual Analysis*, *CSiBridge,* or an alternate program approved by the Design Manager.

For specific design examples of integral steel box caps, see Appendix A.

8-203.00 Design of Columns

8-203.01 Slenderness Effects

TDOT follows the approximate procedure specified in AASHTO 5.6.4.3 where the slenderness ratio of the column $\left(\frac{Kl_u}{r}\right)$ is less than 100. The effective length factor, K, for both the longitudinal and transverse directions shall be taken as 1.2 unless a special case warrants the use of a higher K value at the discretion of the Design Manager.

The vast majority of TDOT bridges will be well below the slenderness ratio limit of 100. The moment magnification method in AASHTO 4.5.3.2.2b shall be used to evaluate slenderness effects, with the exception of the procedure given for seismic design in Section 14.302.00 of SDG 14.

8-203.02 Aesthetics

It is possible to design columns that meet all code requirements for strength but have an appearance that is too slender. In order to avoid this problem, the ratio of the clear column

height to the minimum column cross-sectional dimension shall not be greater than 12 without the Director's approval. The clear column height shall be measured from the top of ground or datum elevation to the bottom of the cap elevation at the face of the column.

8-203.03 Struts

A strut between columns may be used as needed for strength and also to meet the aesthetic requirements of Section 8-203.02. When a strut is used, the ratio of the clear column height to minimum column cross-sectional dimension shall be checked separately above and below the strut. The clear height below the strut shall be measured from the top of ground or datum elevation to the bottom of the strut elevation at the face of the column. The clear height above the strut shall be measured from the top of the strut to the bottom of the cap elevation at the face of the column. Multiple struts in a single bent shall not be used without the Director's approval.

8-203.04 Additional Requirements

For transverse reinforcement in cast-in-place concrete columns, TDOT only permits the use of circular hoops or rectangular stirrups. The use of spiral reinforcement is not allowed. All hoops shall have 135 degree hooks at each end that overlap at least 6" as shown on STD-6-1. For bridges in SDC B, C, and D, rotate the hooked ends of each hoop one-third of the hoop circumference from the adjacent hoop.

The minimum amount of longitudinal reinforcement in columns and drilled shafts shall be 1% of the gross cross-sectional area with the exception given for Seismic Zone 1 (SDC A) in AASHTO 5.6.4.2. The use of straight No. 14 rebar shall be approved by the Design Manager. The use of No. 14 rebar with hooks or bends is discouraged and shall only be permitted with the approval of the Design Manager. The use of No. 18 rebar is not permitted.

For bridges in SDC B, C, and D, lap splices shall not be permitted within the plastic hinge regions. For bridges in SDC A, bars may be spliced at the base of the column.

8-204.00 Design of Pile Bents

Pipe piles shall be fabricated in accordance with ASTM A 252, Grade 3, modified with a minimum yield stress of 50 ksi. Base the Extreme Event limit state moment capacity of the pipe piles on a stress of 80 ksi with no over-strength factor in determining the reinforcing requirements needed to protect the cap. Base the pile capacity for Strength and Service limit states on the minimum yield stress of 50 ksi.

For pipe pile bents, the appropriate limiting value on ductility demand shall be that for multi-column bents in the AASHTO Guide Specifications for LRFD Seismic Bridge Design (Guide Specification) 4.9, $\mu_D \leq 6$.

The D/t ratio shall be within the limits of Guide Specification 7.4.2. If the expected ductility demand, μ_D, is greater than 1, then the pile shall be filled with concrete. If the piles remain elastic, then the Essentially Elastic λ_r may be used.

Concrete-filled steel pipe piles shall be designed in accordance with Guide Specification 7.6. The concrete shall be extended a minimum of 6 feet below the proposed groundline.

For calculating the fully plastic moment and other information regarding pipe pile bents, see SDG 10.

Due to the high redundancy of pile bents, TDOT allows all vertical loads to be distributed equally to the piles. For the vehicular live load reaction, Equation 1 may be used.

$$R_{LL+I} = \frac{(Reaction\ of\ one\ lane\ loaded)(No.\ of\ Design\ Lanes)(Multiple\ Presence\ Factor)}{No.\ of\ Piles} \qquad (1)$$

For pile bents located in a waterway, the ends of the pile cap shall be rounded if the proposed flood elevation reaches the cap. Encasing collars at the ground line or other means of corrosion protection shall be provided in accordance with STD-5-2.

The depth-to-fixity for moment and displacement shall be taken as 4D to 5D as recommended in Seismic Design and Retrofit of Bridges (Priestley, Seible and Calvi 1996, p. 284) unless pile-soil interaction analysis software is used to determine this depth. 'D' is the pile diameter. The use of pile-soil interaction analysis software in lieu of depth-to-fixity estimations may be warranted on critical bridges or where poor soil conditions exist. *FBMultiPier* or *LPile* can be used to perform this analysis, as well as other programs approved by the Design Manager.

The following notes on seismic design for pile bent substructures shall be used as a general guide in the seismic design of these structures.

1. For analyzing the scoured condition when scour is severe, it may be advisable to treat the pile bent as being braced by diaphragm action of the deck carrying load to the abutments. Consult with the Design Manager to determine if a K factor greater than 1.2 is required.
2. The minimum tip elevation shall be the lower of the following 2 elevations:
    a. At least 15 feet below the 500-year scour-line.
    b. The elevation required to obtain the required driving load (as determined per Section 10.302.01 of SDG 10) with all material above the scour-line absent, using

the same resistance factors as for the non-scoured condition per LRFD Spec. Article 10.7.3.6.

3. Perform seismic analyses on the structure for both the scoured and non-scoured conditions. It may be difficult to perform a suitable conventional design for West Tennessee bridges with high scour potential due to the need for larger piles to meet stability requirements in the scoured condition contrasted with the need for smaller piles to meet displacement capacity limits in the non-scoured condition. In such cases, a non-conventional strategy such as seismic isolation may need to be considered.
4. Liquefiable layers shall be handled similarly to scour.

8-205.00 Riser Blocks

Riser block heights shall not be less than 2 inches at the centerline of beam or 1 inch at the edge of the riser block. Riser block heights greater than 6 inches at the centerline of beam shall be reinforced. If a level bent cap is used for a wide bridge, the resulting riser block heights could potentially be taller than desired by TDOT. If using a level bent cap results in one or more riser blocks with a height over 9 inches, a sloped bent cap shall be used instead to keep the riser block heights to a minimum.

Section 3 Leap Bridge Concrete

Use *Leap Bridge Concrete* for bent design unless approval to use an alternate program is given by the Director. The screenshots shown in Figures 7 through 15 show the current Structures Division office policy for the live load multiplier and Analysis/Design Parameters.

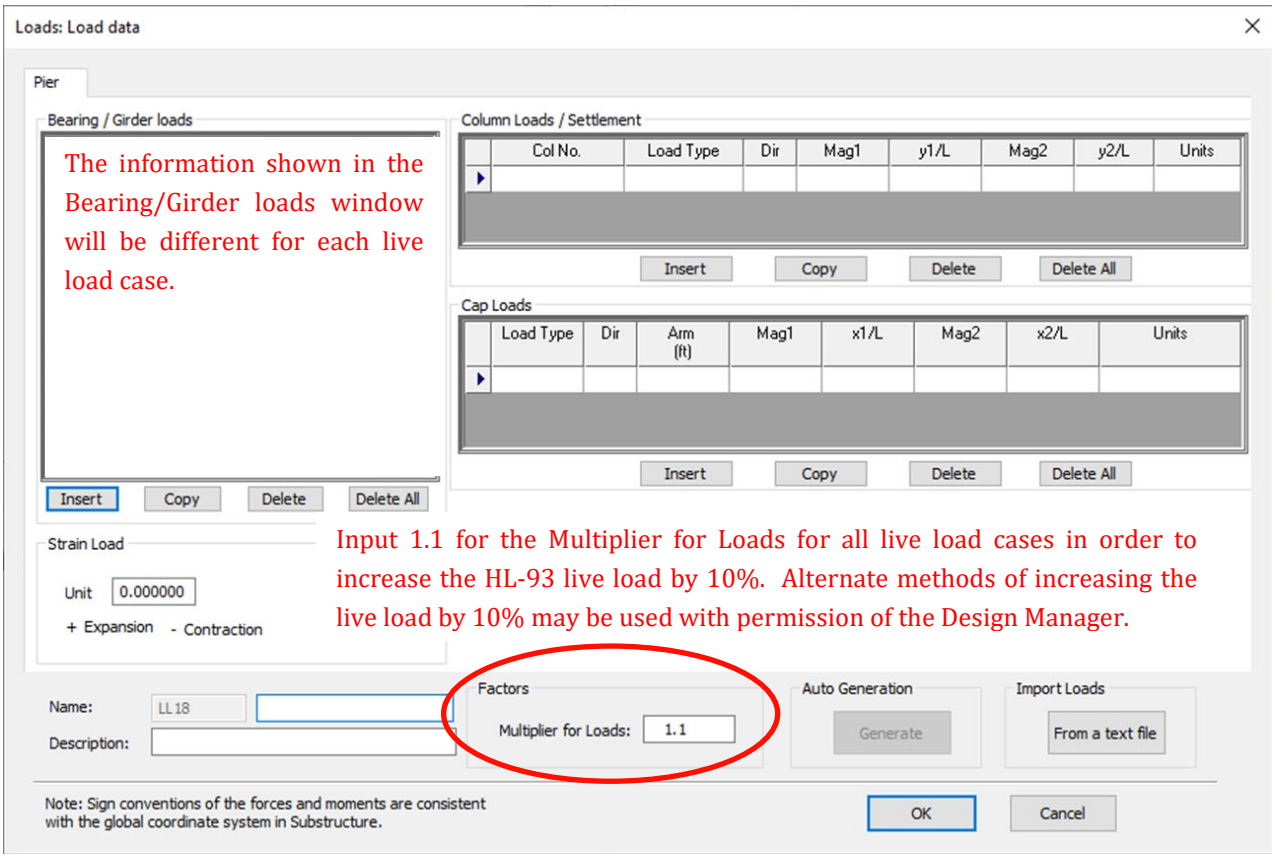

Figure 7 – Multiplier for All Live Load Cases

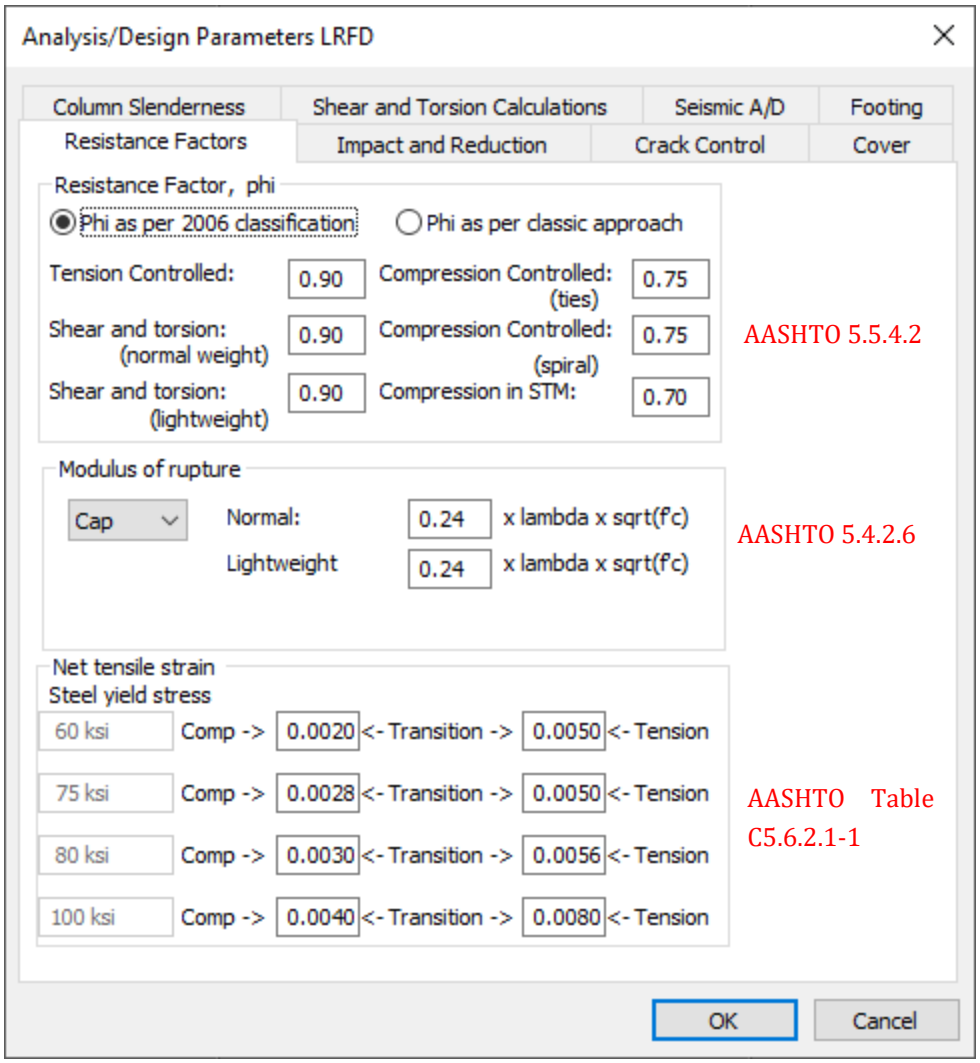

Figure 8 – Resistance Factors

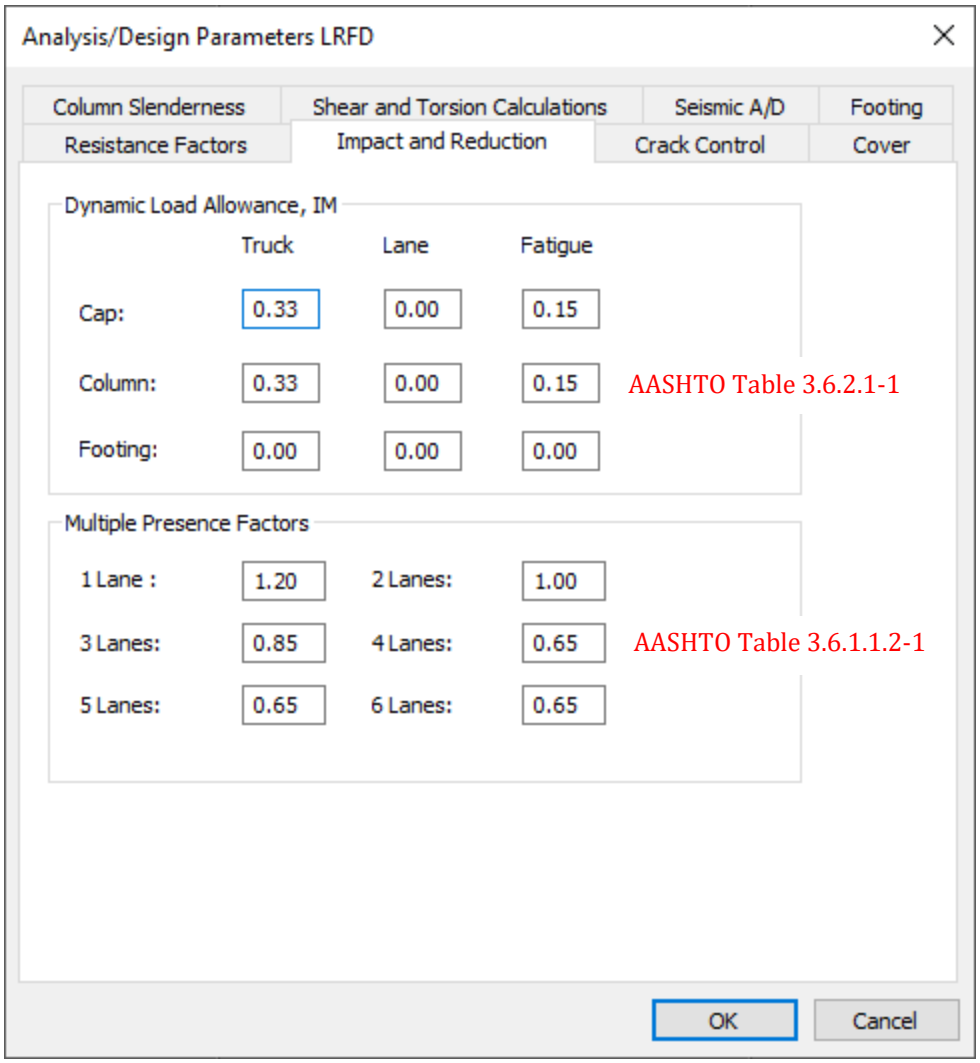

Figure 9 – Impact and Reduction

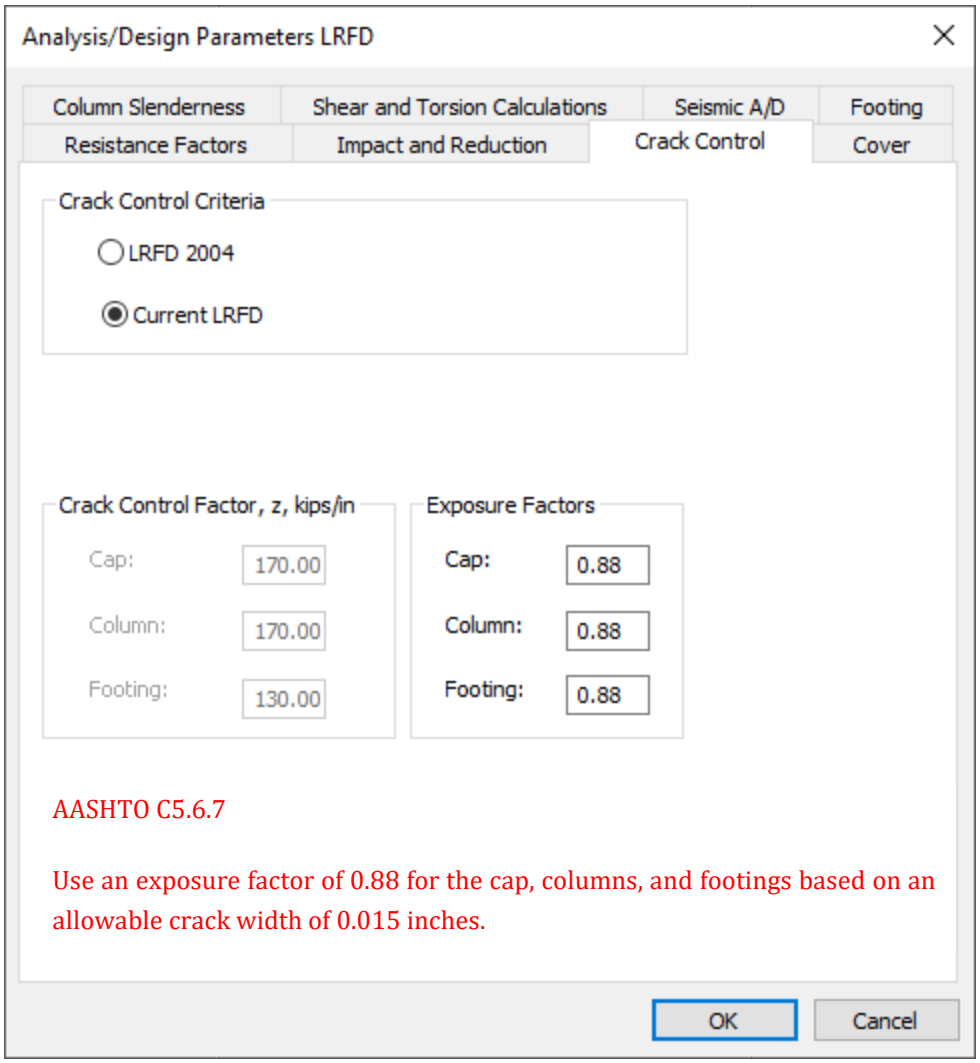

Figure 10 – Crack Control

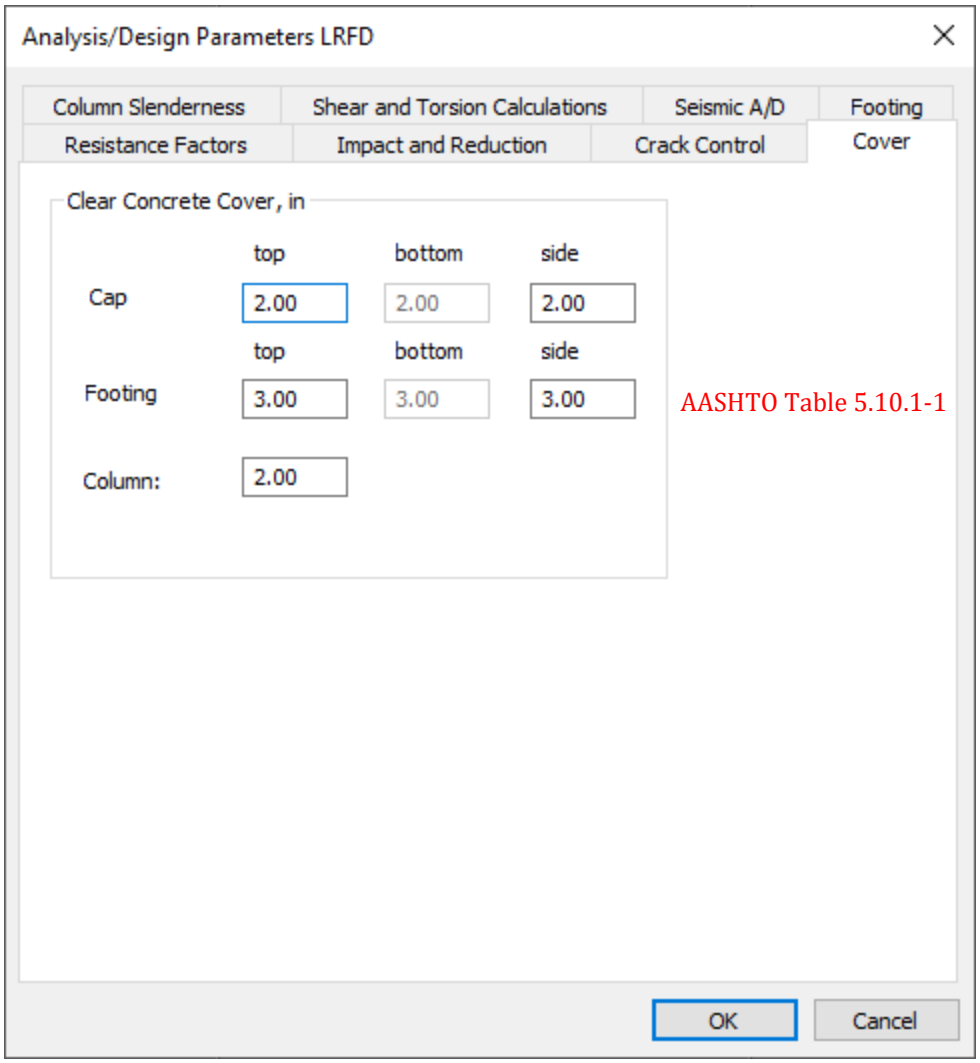

Figure 11 – Cover

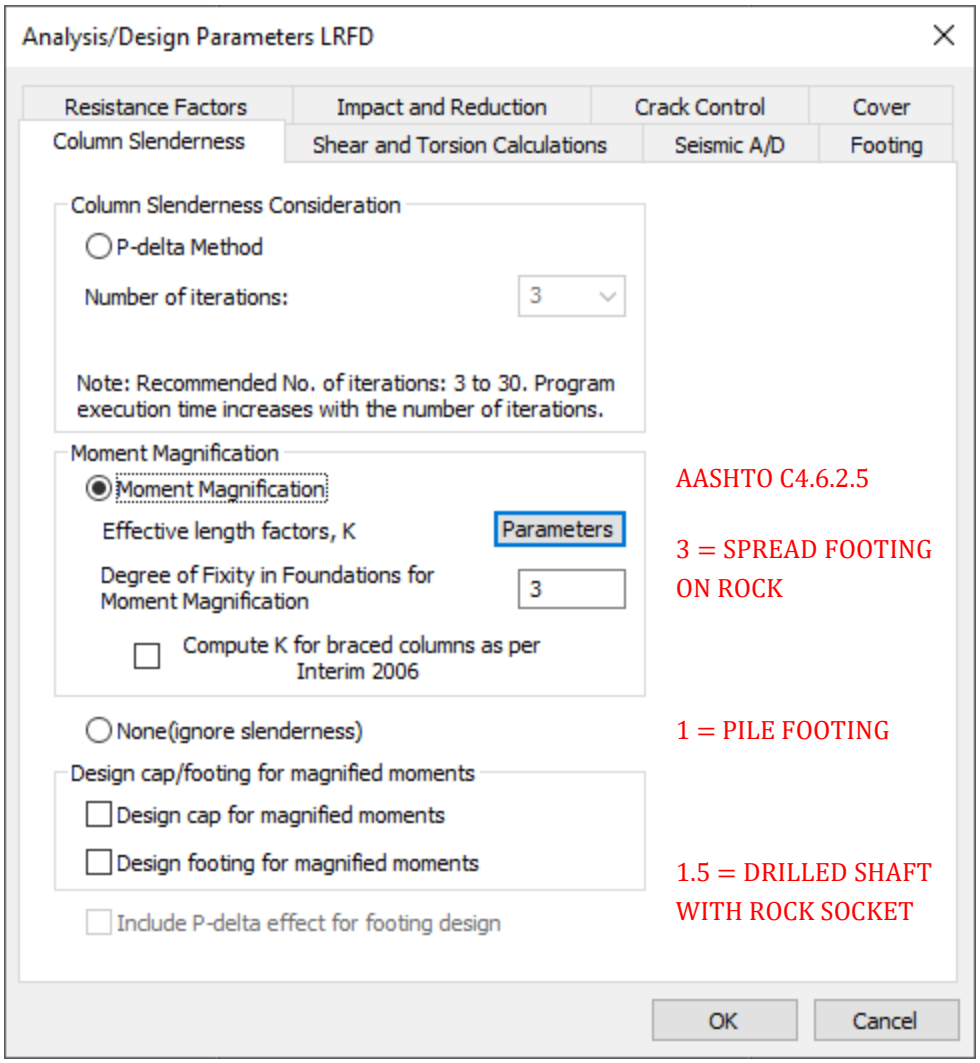

Figure 12 – Column Slenderness

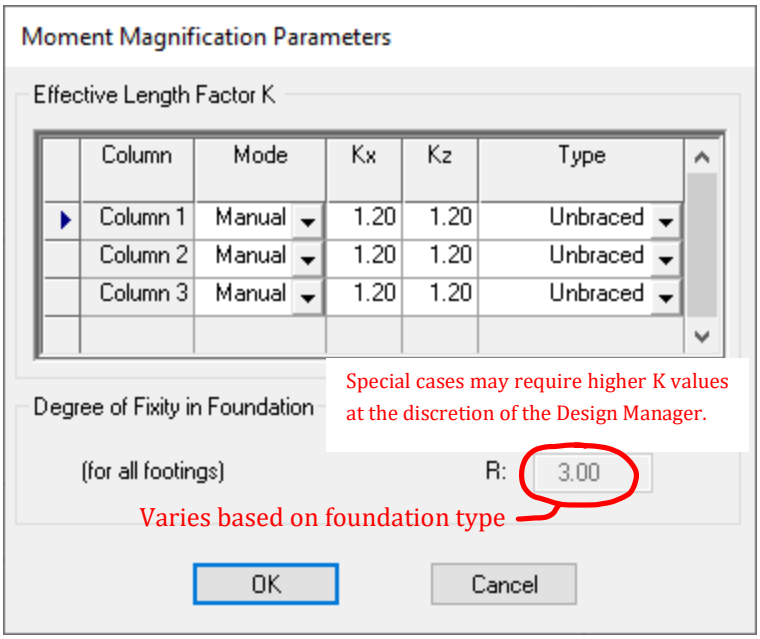

Figure 13 – Moment Magnification Parameters

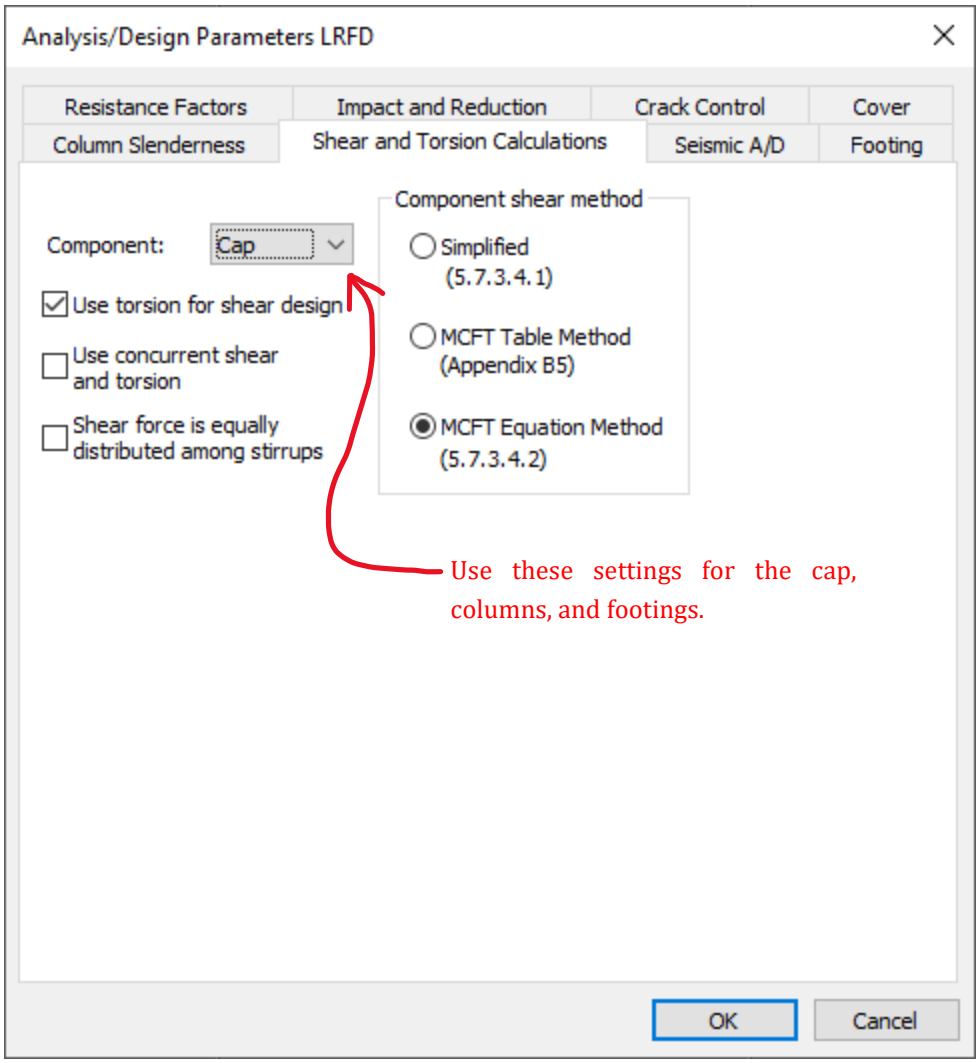

Figure 14 – Shear and Torsion Calculations

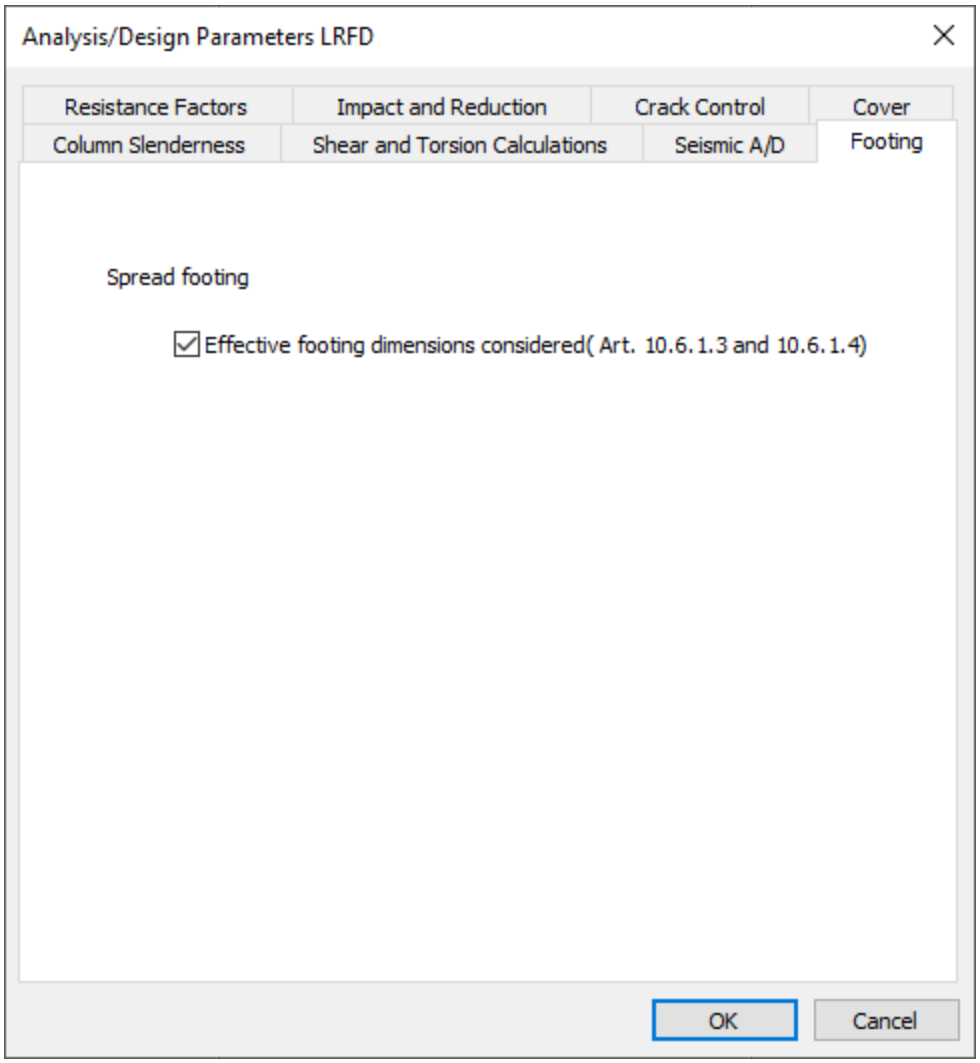

Figure 15 – Footing

Appendix A. Integral Steel Box Cap Examples

The drawings shown in Figures 16, 17, and 18 are examples of integral steel box caps. Other drawings related to these examples can be provided upon request to the Design Manager.

SDG 8-22 TDOT STRUCTURAL DESIGN GUIDELINES

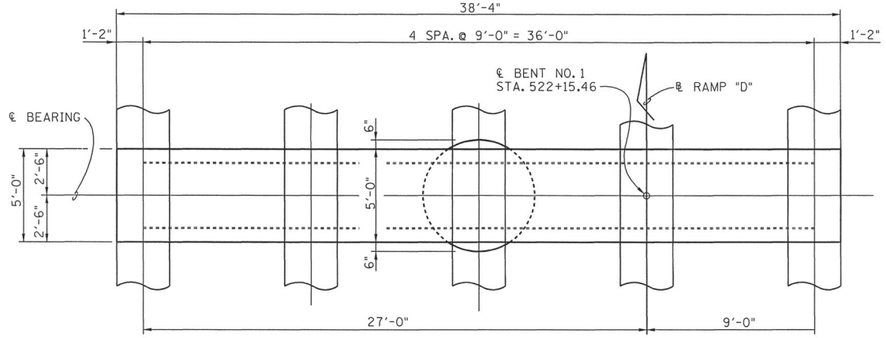

PLAN

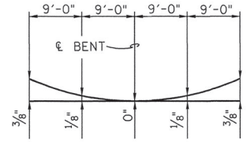

DEAD LOAD CORRECTION CURVE FOR BENT CAP

BENT GENERAL NOTES

APPROVAL OF MATERIALS: NO FABRICATION SHALL BE STARTED UNTIL THE MATERIALS INVOLVED HAVE BEEN APPROVED BY THE TENNESSEE DEPARTMENT OF TRANSPORTATION, DIVISION OF MATERIALS AND TESTS.
IDENTITY OF MAIN MATERIALS: SEE SECTION 602 OF THE STANDARD SPECIFICATIONS.
STRUCTURAL STEEL: SHALL CONFORM TO AASHTO M270 (ASTM A709) GRADE 50W UNLESS OTHERWISE NOTED. ALL STEEL PLATE FOR BENT CAP EXCEPT BOTTOM FLANGE AND MANWAY COVER SHALL MEET THE SUPPLEMENTAL REQUIREMENTS FOR LONGITUDINAL CHARPY V-NOTCH TESTS SPECIFIED IN AASHTO MATERIALS SPECIFICATIONS. ZONE 2 OF NON-FRACTURE CRITICAL CRITERIA SHALL APPLY.
STRUCTURAL STEEL DESIGNATED ON THE PLANS AS FRACTURE CRITICAL SHALL MEET THE REQUIREMENTS OF AASHTO GUIDE SPECIFICATIONS FOR FRACTURE CRITICAL NON-REDUNDANT STEEL BRIDGE MEMBERS AS REQUIRED FOR ZONE 2. FABRICATION OF FRACTURE CRITICAL BRIDGE MEMBERS SHALL BE ACCOMPLISHED BY FABRICATORS CERTIFIED UNDER THE AISC QUALITY CERTIFICATION PROGRAM, CATEGORY III, MAJOR STEEL BRIDGES. NO OTHER CERTIFICATION PROGRAM WILL BE ACCEPTABLE.
WELDING: ANSI/AASHTO/AWS D1.5 BRIDGE WELDING CODE AND SECTION 602 OF THE STANDARD SPECIFICATIONS.
FIELD CONNECTIONS: SHALL BE 1"ø HIGH TENSILE STRENGTH BOLTS ASTM A325W UNLESS OTHERWISE SHOWN. SEE AASHTO SPECIFICATIONS ART. 11.3.2 DIVISION II AND SECTION 602 OF THE STANDARD SPECIFICATIONS.
SHOP ASSEMBLY: PROGRESSIVE SHOP ASSEMBLY WILL BE ALLOWED. SEE AASHTO STANDARD SPECIFICATIONS FOR HIGHWAY BRIDGES, ART. 11.5.3.1 DIVISION II.
NOTE: COLUMN CONCRETE SHALL BE PLACED IN ACCORDANCE WITH SECTION 604 OF THE STANDARD SPECIFICATIONS USING A TREMIE PIPE.
NOTE: SEE DRAWING NO. M-444-134 & M-444-137 FOR ADDITIONAL DETAILS.

CONST. NO. 19076-3239-14

PROJECT NO.	YEAR	SHEET NO.
HPP/NH-155(13)	2003	

REVISIONS

NO.	DATE	BY	BRIEF DESCRIPTION

℄ DENOTES: ELEVATIONS ARE TAKEN @ TOP OF 1½"×60" FLANGE.

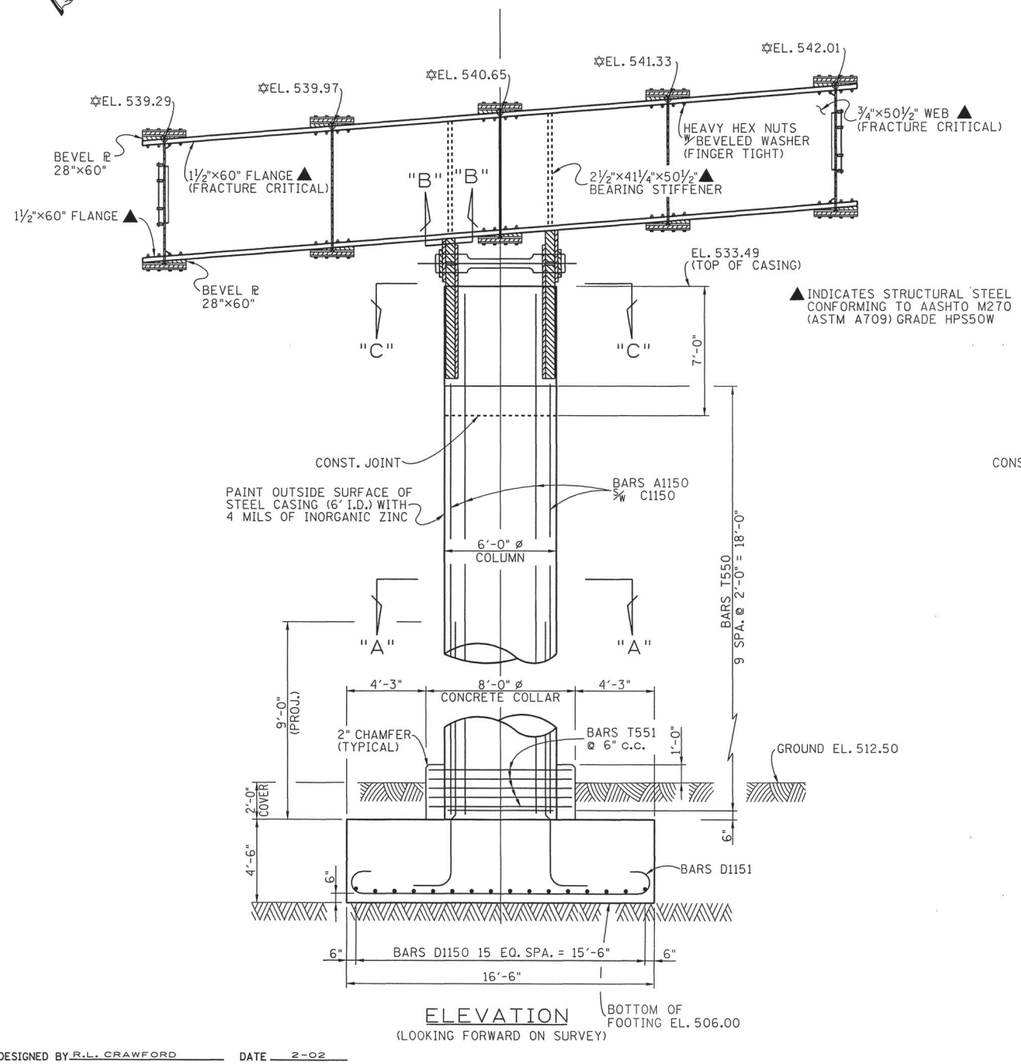

ELEVATION
(LOOKING FORWARD ON SURVEY)

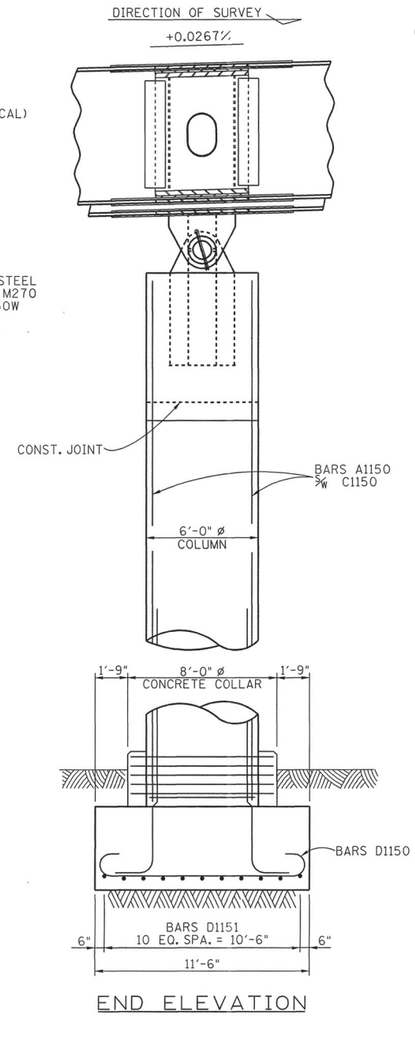

END ELEVATION

NOTE: "T" BARS SHOWN IN SECTION "A"-"A" DO NOT MEET THE CURRENT REQUIREMENT TO OVERLAP THE HOOKED ENDS AT LEAST 6".

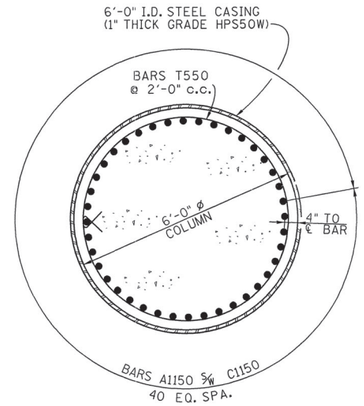

SECTION "A"-"A"
(ANY REINFORCING STEEL INTERFERING WITH BEARING PLATES SHALL BE CUT 2" CLEAR)

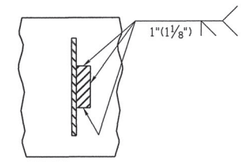

SECTION "B"-"B"

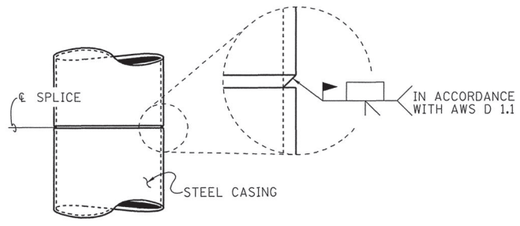

STEEL CASING SPLICE DETAIL

SPLICING OF STEEL CASING SHALL BE IN STRICT ACCORDANCE TO THE ANSI/AWS D 1.1 STRUCTURAL WELDING CODE. FIELD WELDS MAY BE MADE WITH MEMBERS IN THE HORIZONTAL OR VERTICAL POSITIONS PROVIDED THE APPROPRIATE PREQUALIFIED AWS D 1.1 WELD JOINT IS USED FOR THAT POSITION. THE WORK SHALL BE PERFORMED BY AN AWS CERTIFIED WELDER. ANY DAMAGE TO INORGANIC ZINC SHALL BE REPAIRED AT CONTRACTOR'S EXPENSE.

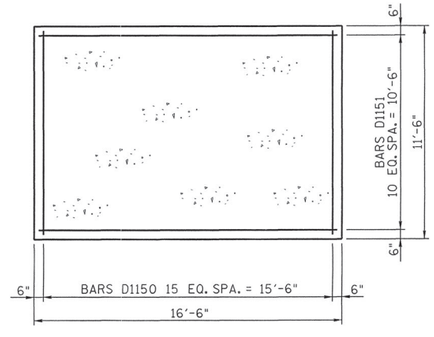

PLAN OF FOOTING

ESTIMATED QUANTITIES

CLASS "A" CONCRETE (BRIDGES) C.Y.	STEEL BAR REINFORCEMENT (BRIDGES) LB.
58	10,594

STATE OF TENNESSEE
DEPARTMENT OF TRANSPORTATION
BRIDGE NO. 4
BENT NO. 1
RAMP "D"
OVER
INTERSTATE 40
STATION 523+20.46
DAVIDSON COUNTY
2003

CLEBERT M. HILES — 15 — REGISTERED ENGINEER — 18641 — STATE OF TENNESSEE

CORRECT Edward P. Wasserman
ENGINEER OF STRUCTURES

DESIGNED BY R.L. CRAWFORD DATE 2-02
DRAWN BY K.L. FRANKENFIELD DATE 2-02
SUPERVISED BY C.M. HILES DATE 2-02
CHECKED BY DATE

M-444-133

FIGURE 16. INTEGRAL STEEL BOX CAP EXAMPLE 1

d:\users\ken\0219aps.dgn
07-NOV-2002
07:08

BP1022F.DGN

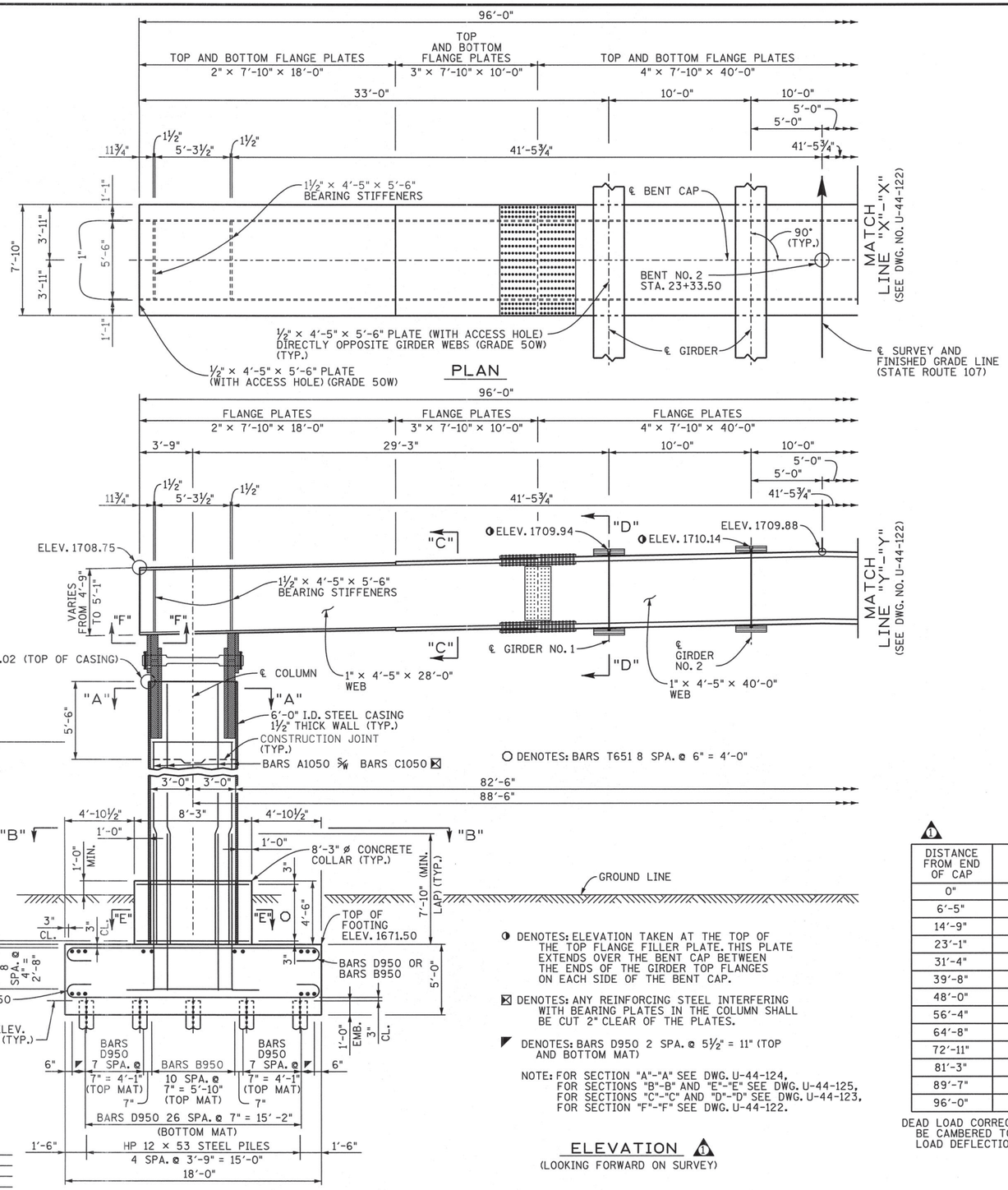

ELEVATION (1)
(LOOKING FORWARD ON SURVEY)

DESIGNED BY ADAM PRICE DATE 04-12
DRAWN BY KXM/RWF DATE 06-12
SUPERVISED BY FIELDS/DIETERS DATE 06-12
CHECKED BY ADAM PRICE DATE 06-12

\\J0019083\WF013.tdot.state.tn.us\35SHARED\BRIDGE\BRIDGEDATA\KXM\work\RWF\DGN\BENTS\BP1022F.dgn
11-MAY-2013
2:39:27 PM

CONST. NO. 86006-3230-14

PROJECT NO.	YEAR	SHEET NO.
STP-107(15)	2012	

REVISIONS

NO.	DATE	BY	BRIEF DESCRIPTION
1	05-21-13	ALP	REVISED ELEVATIONS, CURVE TABLE, QUANTITIES, AND GENERAL NOTES

(1) BENT GENERAL NOTES

APPROVAL OF MATERIALS: NO FABRICATION SHALL BE STARTED UNTIL THE MATERIALS INVOLVED HAVE BEEN APPROVED BY THE TENNESSEE DEPARTMENT OF TRANSPORTATION, DIVISION OF MATERIALS AND TESTS WITH A COPY OF THE TEST REPORTS ALSO GOING TO THE TENNESSEE DEPARTMENT OF TRANSPORTATION, DIVISION OF MATERIALS AND TESTS.

IDENTITY OF MAIN MATERIALS: SEE SECTION 602 OF THE STANDARD SPECIFICATIONS.

STRUCTURAL STEEL: SHALL CONFORM TO ASTM A709 GRADE HPS50W UNLESS OTHERWISE NOTED. ALL STEEL PLATE FOR BENT CAP EXCEPT TOP FLANGE AND MANWAY COVER SHALL MEET THE SUPPLEMENTAL REQUIREMENTS FOR LONGITUDINAL CHARPY V-NOTCH TESTS SPECIFIED IN THE ASTM SPECIFICATIONS. ZONE 2 OF FRACTURE CRITICAL CRITERIA SHALL APPLY.

STRUCTURAL STEEL DESIGNATED ON THE PLANS AS FRACTURE CRITICAL SHALL MEET THE REQUIREMENTS OF AASHTO GUIDE SPECIFICATIONS FOR FRACTURE CRITICAL NON-REDUNDANT STEEL BRIDGE MEMBERS AS REQUIRED FOR ZONE 2. FABRICATION OF FRACTURE CRITICAL BRIDGE MEMBERS SHALL BE ACCOMPLISHED BY FABRICATORS CERTIFIED UNDER THE AISC QUALITY CERTIFICATION PROGRAM, CATEGORY III, MAJOR STEEL BRIDGES. NO OTHER CERTIFICATION PROGRAM WILL BE ACCEPTABLE.

WELDING: ANSI/AASHTO/AWS D1.5-CURRENT EDITION BRIDGE WELDING CODE AND SECTION 602 OF THE STANDARD SPECIFICATIONS.

FIELD CONNECTIONS: SHALL BE 1"ø HIGH TENSILE STRENGTH BOLTS ASTM A490 TYPE 3 UNLESS OTHERWISE SPECIFIED. SEE AASHTO LRFD BRIDGE CONSTRUCTION SPECIFICATIONS ART. 11.3.2 AND SECTION 602 OF THE STANDARD SPECIFICATIONS.

SHOP ASSEMBLY: PROGRESSIVE SHOP ASSEMBLY WILL BE ALLOWED. SEE AASHTO LRFD BRIDGE CONSTRUCTION SPECIFICATIONS ART. 11.5.3.1.

NOTE: COLUMN CONCRETE SHALL BE PLACED IN ACCORDANCE WITH SECTION 604 OF THE STANDARD SPECIFICATIONS USING A TREMIE PIPE.

NOTE: ALL BOTTOM FLANGES AND WEBS ARE FRACTURE CRITICAL.

NOTE: EXTERIOR OF STEEL COLUMN CASINGS TO BE PAINTED. SEE GENERAL NOTES ON DRAWING NO. U-44-91.

ADDITIONAL SHOP SPLICE NOTE: SHOP SPLICES NECESSARY DUE TO LENGTHS OR SIZE OF MATERIAL INVOLVED MAY BE ADDED BY THE FABRICATOR SUBJECT TO APPROVAL BY THE ENGINEER AND SHALL BE AT NO ADDITIONAL COST TO THE PROJECT.

ADDITIONAL FIELD SPLICE NOTE: FIELD SPLICES NECESSARY DUE TO LENGTHS INVOLVED MAY BE ADDED BY THE FABRICATOR SUBJECT TO APPROVAL BY THE ENGINEER AND SHALL BE AT NO ADDITIONAL COST TO THE PROJECT. FIELD SPLICE NOTE: FIELD SPLICES SHOWN ON THE PLANS MAY BE DELETED BY THE CONTRACTOR. ADJUSTMENT TO THE LUMP SUM PRICE FOR STEEL STRUCTURES SHALL BE IN ACCORDANCE WITH THE SPECIFICATIONS.

NOTE: 2" ø WEEP HOLES WITH SCREEN WIRE COVER REQUIRED AT LOW POINT OF EACH CELL.

(1)

DISTANCE FROM END OF CAP	TOTAL DEAD LOAD	CAP DEAD LOAD
0"	0"	0"
6'-5"	½"	1/16"
14'-9"	1⅛"	⅛"
23'-1"	1⅝"	3/16"
31'-4"	2 1/16"	¼"
39'-8"	2 5/16"	¼"
48'-0"	2⅜"	5/16"
56'-4"	2 5/16"	¼"
64'-8"	2 1/16"	¼"
72'-11"	1⅝"	3/16"
81'-3"	1⅛"	⅛"
89'-7"	½"	1/16"
96'-0"	0"	0"

DEAD LOAD CORRECTION CURVE: BENT CAP SHALL BE CAMBERED TO COMPENSATE FOR TOTAL DEAD LOAD DEFLECTION.

(1)

ESTIMATED QUANTITIES	
CLASS "A" CONCRETE (BRIDGES) C.Y.	REINFORCING STEEL (BRIDGES) L.B.
188	24,159

STATE OF TENNESSEE
DEPARTMENT OF TRANSPORTATION

BENT NO. 2
STATE ROUTE 107
OVER CSX RAILROAD
STATION 31+20.60
UNICOI COUNTY
2012

CABRINA M. DIETERS — 237 — REGISTERED — AGRICULTURE — STATE OF TENNESSEE

CORRECT Wayne J. Feger
ENGINEER OF STRUCTURES

U-44-121

FIGURE 17. INTEGRAL STEEL BOX CAP EXAMPLE 2A

BP1022F.DGN

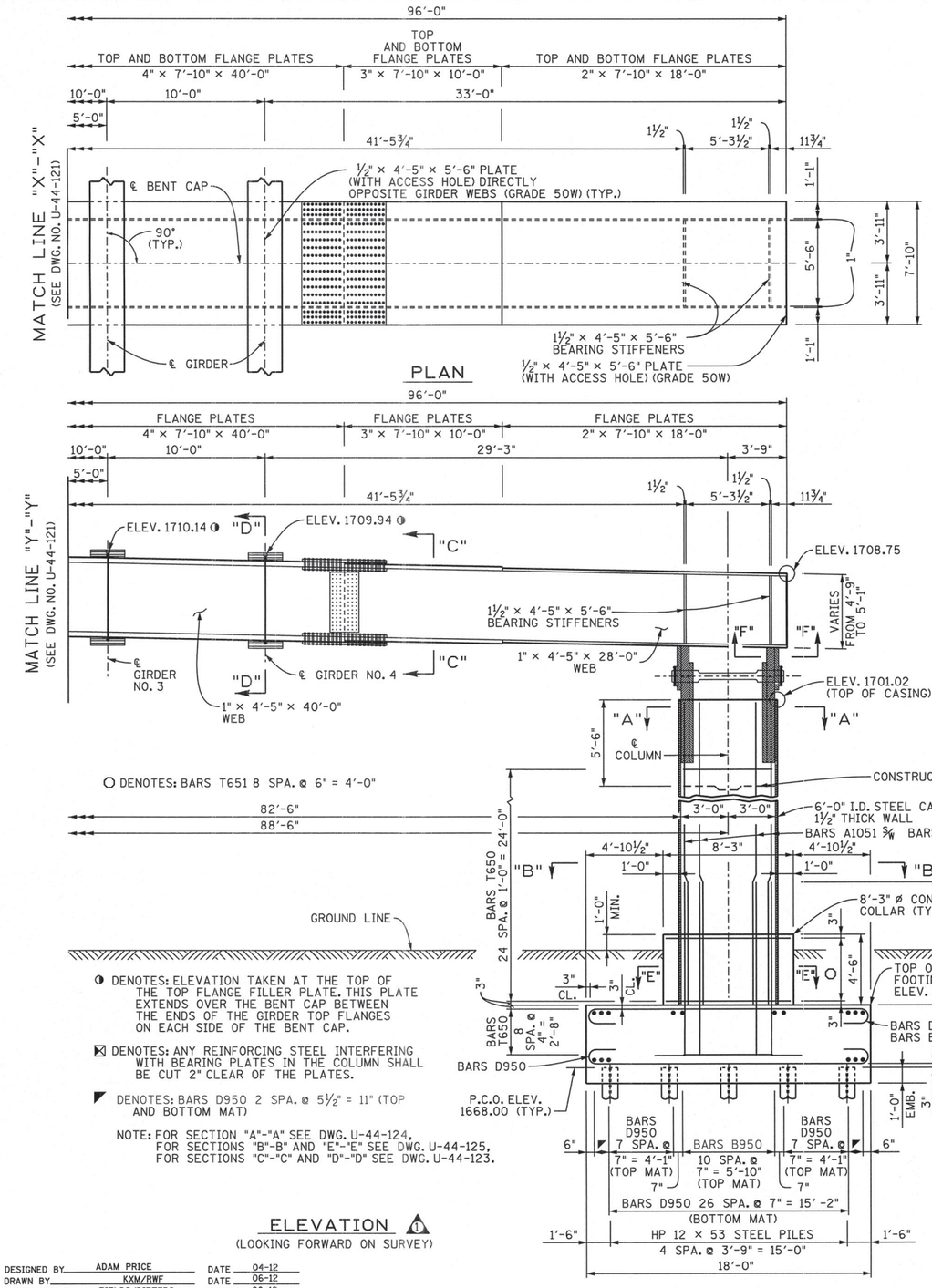

ELEVATION ①
(LOOKING FORWARD ON SURVEY)

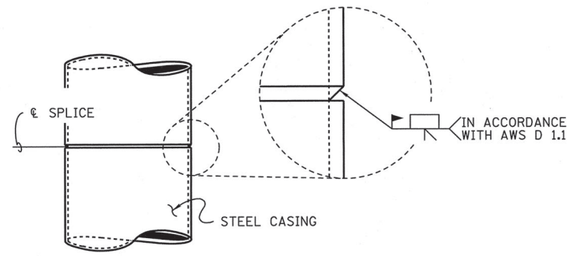

STEEL CASING SPLICE DETAIL

SPLICING OF STEEL CASING SHALL BE IN STRICT ACCORDANCE TO THE ANSI/AWS D 1.1 STRUCTURAL WELDING CODE. FIELD WELDS MAY BE MADE WITH MEMBERS IN THE HORIZONTAL OR VERTICAL POSITIONS PROVIDED THE APPROPRIATE PREQUALIFIED AWS D 1.1 WELD JOINT IS USED FOR THAT POSITION. THE WORK SHALL BE PERFORMED BY AN AWS CERTIFIED WELDER. ANY DAMAGE TO PAINT SHALL BE REPAIRED AT CONTRACTOR'S EXPENSE.

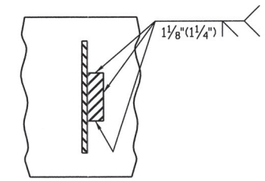

SECTION "F"-"F"

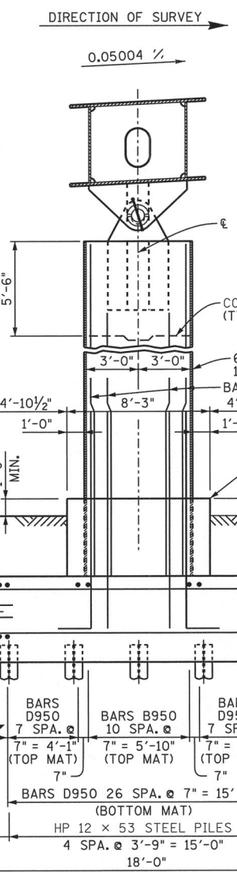

END ELEVATION

CONST. NO. 86006-3230-14

PROJECT NO.	YEAR	SHEET NO.
STP-107(15)	2012	

REVISIONS

NO.	DATE	BY	BRIEF DESCRIPTION
1	05-21-13	ALP	REVISED ELEVATIONS

CABRINA M. DIETERS
LICENSED PROFESSIONAL ENGINEER
AGRICULTURE
STATE OF TENNESSEE

STATE OF TENNESSEE
DEPARTMENT OF TRANSPORTATION

BENT NO. 2 DETAILS
STATE ROUTE 107
OVER CSX RAILROAD
STATION 31+20.60
UNICOI COUNTY
2012

CORRECT Wayne G. Sayer
ENGINEER OF STRUCTURES

U-44-122

DESIGNED BY ADAM PRICE DATE 04-12
DRAWN BY KXM/RWF DATE 06-12
SUPERVISED BY FIELDS/DIETERS DATE 06-12
CHECKED BY ADAM PRICE DATE 06-12

\\DOI1908\WF013.tdot.state.tn.us\13SHARED\BRIDGE\BRIDGEDATA\KXM\work\RWF\DGN\BENTS\BP1022F.dgn
21-MAY-2013

FIGURE 18. INTEGRAL STEEL BOX CAP EXAMPLE 2B

Works Cited

AASHTO. 2024. "AASHTO LRFD Bridge Design Specifications 10th Edition." Washington, DC.

AASHTO. 2011. "AASHTO Guide Specifications for LRFD Seismic Bridge Design." Washington, D.C.

Harns, Mays, and Johnson. 2010. *Proposed Seismic Detailing Criteria for Piers and Wharves.* Ports 2010.

Priestley, M. J. N., F. Seible, and G. M. Calvi. *Seismic Design and Retrofit of Bridges.* 1st. New York, NY: John Wiley & Sons, 1996.