SDG 7:

Abutment Design

Chapter 7

Tennessee Department of Transportation September 11, 2026

Table of Contents

Section 1 Abutment Design 1
7-101.00 Introduction 1
7-102.00 Number of Piles Required 1
7-103.00 Maximum Pile Spacing 1
7-104.00 Minimum Pile Spacing 1
7-105.00 Abutment Beams 1
7-106.00 Wing Angles 2
7-107.00 Beam Stops 2
7-108.00 Expansion Joints 2
7-109.00 Reinforcement Orientation 2
Appendix A. Standard Details for Stub Abutments 3
Works Cited 8

Table of Figures

Figure 1. Standard Details for Stub Abutments 4
Figure 2. Standard Details for Stub Abutments 5
Figure 3. Standard Details for Stub Abutments 6
Figure 4. Standard Details for Stub Abutments 7

Version History and Revision Summary

Version history and a summary of revisions are given in the table below. Minor editorial revisions may not be included in the summary.

Version	Revision Summary
08282025	Initial Release
06022026	Revised 7-105.00, Added 7-109.00, Revised Figure 1
09112026	Revised 7-105.00

Section 1 Abutment Design

7-101.00 Introduction

The superstructure is to be supported by either a stub abutment or a closed abutment at each end of a bridge. Stub abutments have abutment beams that are 3'-0" in depth and are located at the top of a sloped embankment. Stub abutments are typically supported by piles. The bridge plans for stub abutments shall be in accordance with these guidelines. Closed abutments are taller and act as retaining walls in addition to supporting the superstructure. Closed abutments must be designed specifically for each location they are used. The bridge plans for closed abutments shall be in accordance with these guidelines for details not superseded by the design. Most abutments in Tennessee are stub abutments supported by piles.

7-102.00 Number of Piles Required

One pile is required under the centerline of each beam. If the design requires additional piles, place additional piles evenly spaced between beams. Furthermore, all bays between beams shall have the same number of additional piles, regardless of the design requirements. For severely skewed bridges where a pile placed under the centerline of the exterior beam would conflict with the wing reinforcement, shift the pile as needed to avoid the conflict.

7-103.00 Maximum Pile Spacing

The maximum center-to-center pile spacing in wingbeams is 8'-0". In abutment beams, no maximum pile spacing is given other than the limits set by Section 7-102.00.

7-104.00 Minimum Pile Spacing

The minimum pile spacing shall be in accordance with AASHTO 10.7.1.2, except prestressed concrete friction piles shall not be spaced less than twice the minimum spacing between piles to allow room for additional piles to be driven if bearing requirements are not met.

7-105.00 Abutment Beams

The minimum abutment beam width is 3'-0". Skewed bridges and bridges with expansion joints may require wider abutment beams. When calculating the required abutment beam width, the entire bearing pad or bearing device must be positioned on the riser block with a minimum of 1" of clearance to the riser block chamfer. The riser blocks and the edge of the abutment beam shall each have a 1" chamfer. Riser block heights shall not be less than 2 inches at the centerline of beam or 1 inch at the edge of the riser block. Riser block heights greater than 6 inches at the centerline of beam shall be reinforced. If a level abutment beam is used for a wide bridge, the resulting riser block heights could potentially be taller than desired by TDOT. If using a level

abutment beam results in one or more riser blocks with a height over 9 inches, a sloped abutment beam shall be used instead to keep the riser block heights to a minimum.

All abutment beams shall be level from the end of the abutment beam to the centerline of the exterior beam on each side.

For bridges with abutment walls instead of abutment beams, these requirements shall still apply.

7-106.00 Wing Angles

For straight bridges, the wings shall be oriented parallel to the centerline of survey. For curved bridges, the wings shall be oriented to follow the edge of the shoulder as closely as possible without encroaching on the shoulder at any point. Curved bridges shall have straight wings unless permission to curve the wings is given by the Design Manager.

7-107.00 Beam Stops

A beam stop is a wedge of concrete poured to fill the gap between the beam end and the abutment endwall. Beam stops are required for all skewed bridges except prestressed concrete box beam bridges with a skew from 60 degrees to 90 degrees. In that case, the ends of the beams can be skewed to match the bridge skew so that beam stops are not necessary.

7-108.00 Expansion Joints

Slab reinforcement and endwall reinforcement shall be detailed and listed in the bill of steel without regard for the expansion device for all bridges with expansion joints. Any reinforcement that interferes with the placement of the expansion device shall be removed or cut 2" clear in the field by the contractor in accordance with the approved expansion device shop drawings.

7-109.00 Reinforcement Orientation

Bars L54- (abutment beam) and Bars H54- (endwall/roadway bracket) shall be oriented perpendicular to the front face of the abutment beam for all bridges regardless of skew.

Bars F64-E (endwall/roadway bracket) may be oriented along the skew if desired.

Appendix A. Standard Details for Stub Abutments

Figures 1 through 4 show standard details for stub abutments for TDOT.

REVISIONS			
NO.	DATE	BY	BRIEF DESCRIPTION
1	6-02-26	ALP	REVISED EQUATIONS

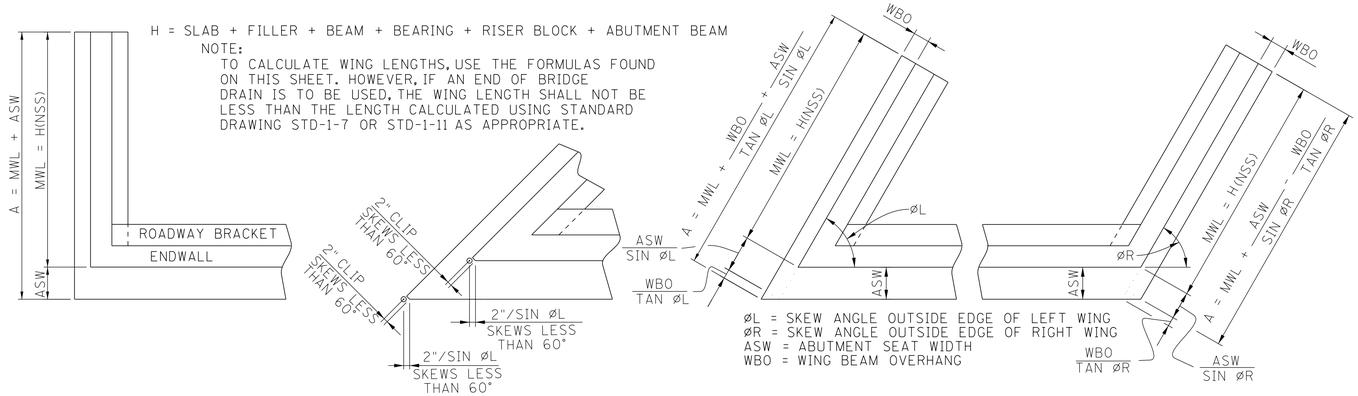

H = SLAB + FILLER + BEAM + BEARING + RISER BLOCK + ABUTMENT BEAM

NOTE:
TO CALCULATE WING LENGTHS, USE THE FORMULAS FOUND ON THIS SHEET. HOWEVER, IF AN END OF BRIDGE DRAIN IS TO BE USED, THE WING LENGTH SHALL NOT BE LESS THAN THE LENGTH CALCULATED USING STANDARD DRAWING STD-1-7 OR STD-1-11 AS APPROPRIATE.

ØL = SKEW ANGLE OUTSIDE EDGE OF LEFT WING
ØR = SKEW ANGLE OUTSIDE EDGE OF RIGHT WING
ASW = ABUTMENT SEAT WIDTH
WBO = WING BEAM OVERHANG

EQUATIONS FOR WING DIMENSIONS

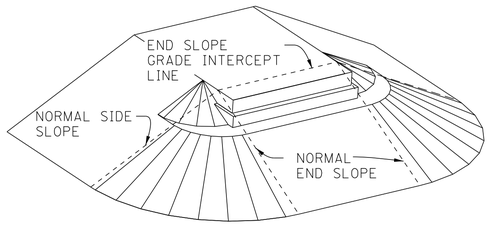

NORMAL END SLOPE

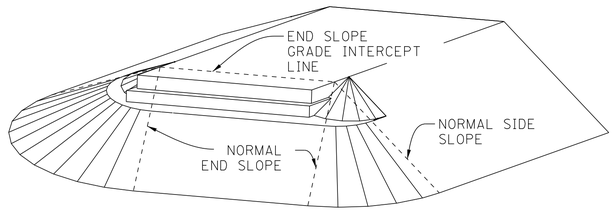

SKEWED END SLOPE

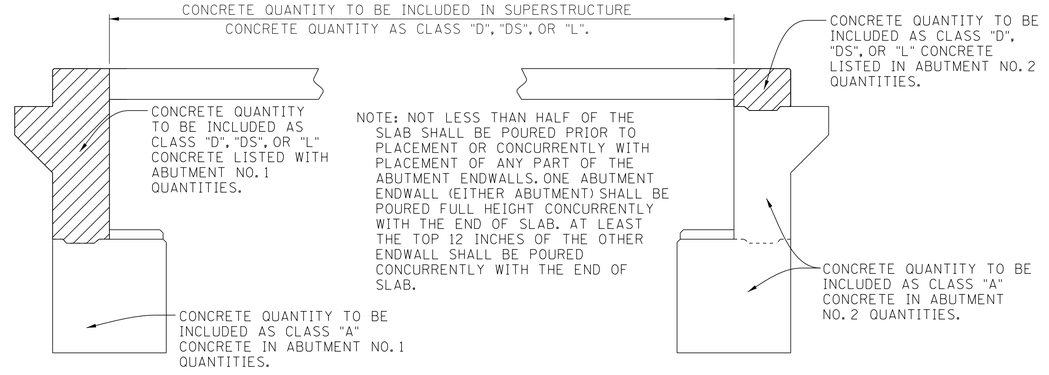

ABUTMENT NO. 1 ABUTMENT NO. 2

CONCRETE QUANTITIES FOR SINGLE SPAN ABUTMENTS

(PRESTRESSED CONCRETE BRIDGES WITH INTEGRAL ABUTMENTS)

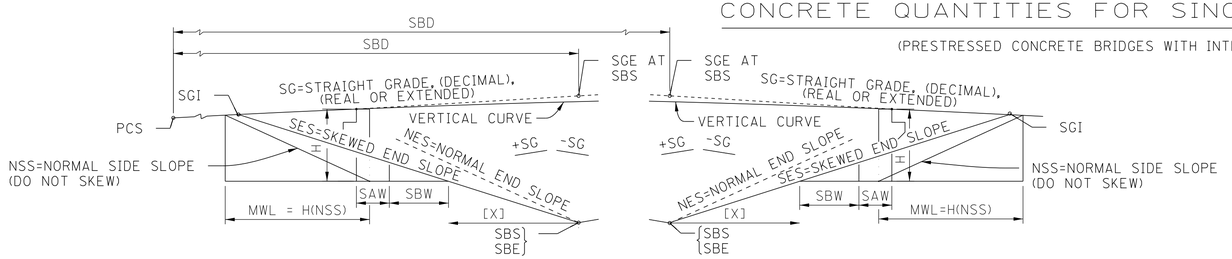

VERTICAL CURVE AND END SLOPE EQUATIONS

$Y = PCE + G1(SBD - X) + K(SBD - X)^2$ AND $Y = (SES)(X) + SBE$

$$X^2 - \left[2(SBD) + \frac{G1}{K} + \frac{SES}{K}\right] X - \frac{SBE}{K} + \frac{PCE}{K} + \frac{G1(SBD)}{K} + (SBD)^2 = 0$$

$$B = -2(SBD) - \frac{G1}{K} - \frac{SES}{K}$$

$$C = -\frac{SBE}{K} + \frac{PCE}{K} + \frac{G1(SBD)}{K} + (SBD)^2$$

1. $X = -\frac{B}{2} \pm \left[\left(\frac{B}{2}\right)^2 - C\right]^{1/2}$ TAKE X AS THE MINIMUM OF THE 2 SOLUTIONS FOR X IN MAGNITUDE.
2. $SGI = SBS - |X|$

$BEGINNING\ OF\ BRIDGE\ STATION = SGI + \frac{H(NES)}{SIN\ \emptyset} - SBW - SAW$

APPLICABLE FOR: $VPC \le SGI \le VPT$

STRAIGHT GRADE AND END SLOPE EQUATIONS

$Y = -(SG)(X) + SGE$ AND $Y = (SES)(X) + SBE$

$X = (SGE - SBE)/(SES + SG)$ REAL OR EXTENDED

$SGI = SBS - X$

$BEGINNING\ OF\ BRIDGE\ STATION = SGI + \frac{H(NES)}{SIN\ \emptyset} - SBW - SAW$

APPLICABLE FOR $SGI \le VPC$ OR $SGI \ge VPT$

EQUATIONS FOR DETERMINING BEGINNING OF BRIDGE STATION

H = DISTANCE FROM TOP OF SLAB TO BOTTOM OF ABUTMENT ℄ SURVEY (FEET)
Ø = ROADWAY SKEW ANGLE AT SLOPE BREAK ALONG ℄ SURVEY
PCS = PC STATION (FEET)
PCE = PC ELEVATION
G1 = BACK TANGENT GRADE (DECIMAL)
G2 = FORWARD TANGENT GRADE (DECIMAL)
VCL = VERTICAL CURVE LENGTH (FEET)
K = (G2 - G1)/(2(VCL))
SBS = SLOPE BREAK STATION (FEET)
SBE = SLOPE BREAK ELEVATION
SBD = SLOPE BREAK STATION - PC STATION (FEET)
SGE = STRAIGHT GRADE ELEVATION AT SLOPE BREAK STATION
SGI = SLOPE AND GRADE INTERSECTION STATION (FEET)
SES = 1/(NES/SIN Ø) (DECIMAL)
SBW = BERM WIDTH/SIN Ø (FEET)
SAW = ABUTMENT WIDTH/SIN Ø (FEET)
MWL = MINIMUM WINGWALL LENGTH (FEET)
X = ABSOLUTE DISTANCE (USE |X| FOR X.)(FEET)
Y = ELEVATION AT SLOPE BREAK STATION

VERTICAL CURVE AND END SLOPE EQUATIONS

$Y = PCE + G1(SBD + X) + K(SBD + X)^2$ AND $Y = (SES)(X) + SBE$

$$X^2 + \left[2(SBD) + \frac{G1}{K} - \frac{SES}{K}\right] X - \frac{SBE}{K} + \frac{PCE}{K} + \frac{G1(SBD)}{K} + (SBD)^2 = 0$$

$$B = 2(SBD) + \frac{G1}{K} - \frac{SES}{K}$$

$$C = -\frac{SBE}{K} + \frac{PCE}{K} + \frac{G1(SBD)}{K} + (SBD)^2$$

1. $X = -\frac{B}{2} \pm \left[\left(\frac{B}{2}\right)^2 - C\right]^{1/2}$ TAKE X AS THE MINIMUM OF THE 2 SOLUTIONS FOR X IN MAGNITUDE.
2. $SGI = SBS + |X|$

$END\ OF\ BRIDGE\ STATION = SGI - \frac{H(NES)}{SIN\ \emptyset} + SBW + SAW$

APPLICABLE FOR: $VPC \le SGI \le VPT$

STRAIGHT GRADE AND END SLOPE EQUATIONS

$Y = (SG)(X) + SGE$ AND $Y = (SES)(X) + SBE$

$X = (SGE - SBE)/(SES - SG)$ REAL OR EXTENDED

$SGI = SBS + X$

$END\ OF\ BRIDGE\ STATION = SGI - \frac{H(NES)}{SIN\ \emptyset} + SBW + SAW$

APPLICABLE FOR $SGI \le VPC$ OR $SGI \ge VPT$

EQUATIONS FOR DETERMINING END OF BRIDGE STATION

DESIGN BY:	KDM	DATE:	5-25
DRAWN BY:	KDM	DATE:	5-25
SUPERVISED BY:	ALP	DATE:	5-25
CHECKED BY:	ALP	DATE:	5-25

STATE OF TENNESSEE
DEPARTMENT OF TRANSPORTATION

STANDARD DETAILS FOR STUB ABUTMENTS 2025

FIGURE 1. STANDARD DETAILS FOR STUB ABUTMENTS

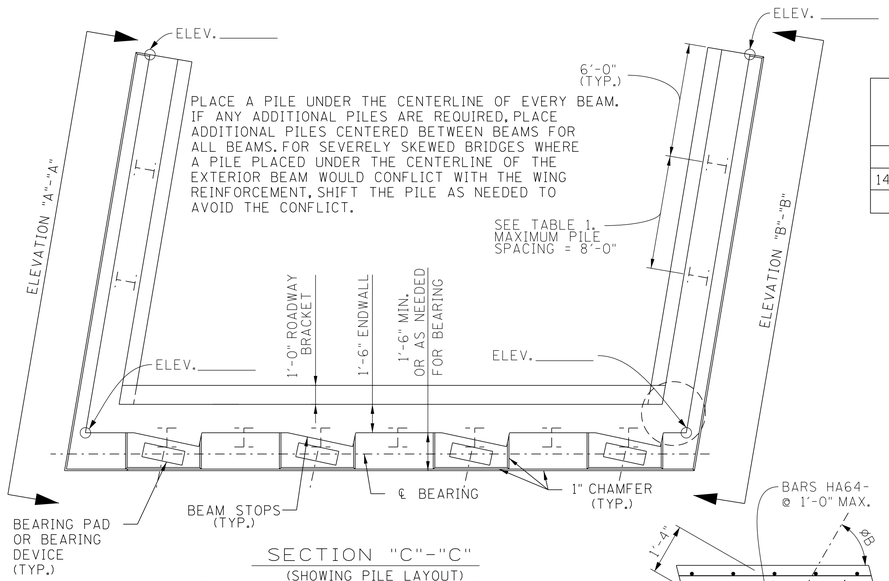

SECTION "C"-"C"
(SHOWING PILE LAYOUT)
(STEEL HP PILES SHOWN - OTHER PILES SIMILAR)
(HP PILES SHALL BE ORIENTED AS SHOWN.)

WINGWALL LENGTH "L"	NUMBER OF PILES IN WINGBEAM
L ≤ 14'-0"	1
14'-0" < L ≤ 22'-0"	2
L > 22'-0"	3+

TABLE 1

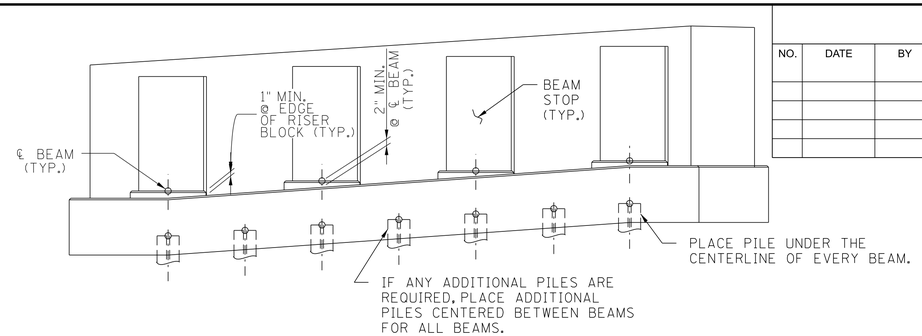

ABUTMENT ELEVATION VIEW SHOWING PILE LAYOUT
(STEEL HP PILES SHOWN - OTHER PILES SIMILAR)

REVISIONS			
NO.	DATE	BY	BRIEF DESCRIPTION

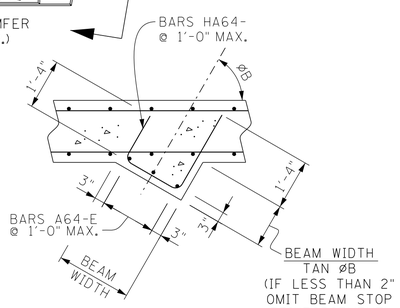

BEAM STOP DETAIL

ØL DENOTES: SKEW ANGLE OF LEFT WING
ØB DENOTES: SKEW ANGLE OF ℄ BEAM
ØR DENOTES: SKEW ANGLE OF RIGHT WING

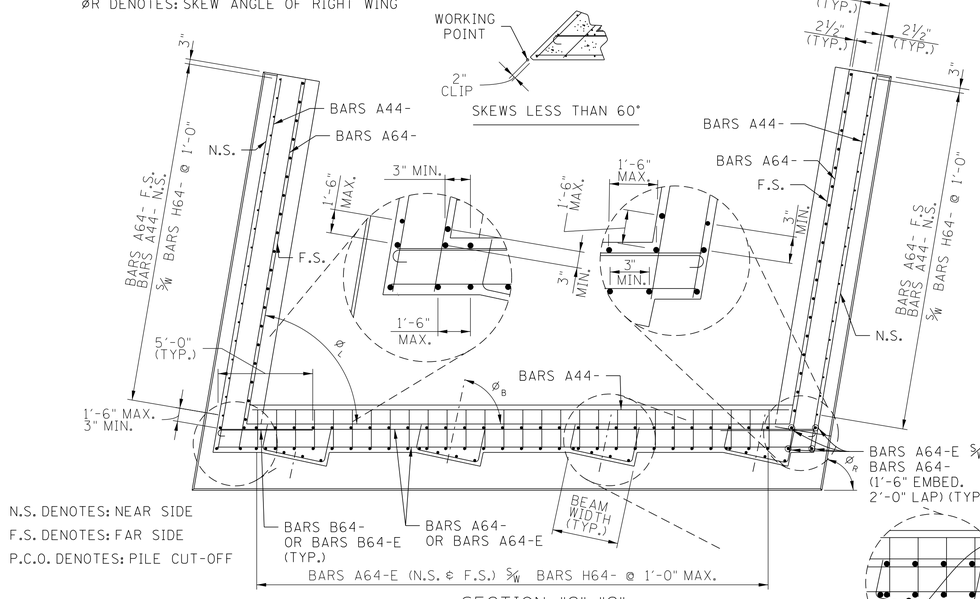

SECTION "C"-"C"
(SHOWING ENDWALL REINFORCING)

NOTE: PARAPET/BRIDGERAIL REINFORCEMENT NOT SHOWN FOR CLARITY. REFER TO APPLICABLE STANDARD DRAWING FOR PARAPET/BRIDGERAIL.

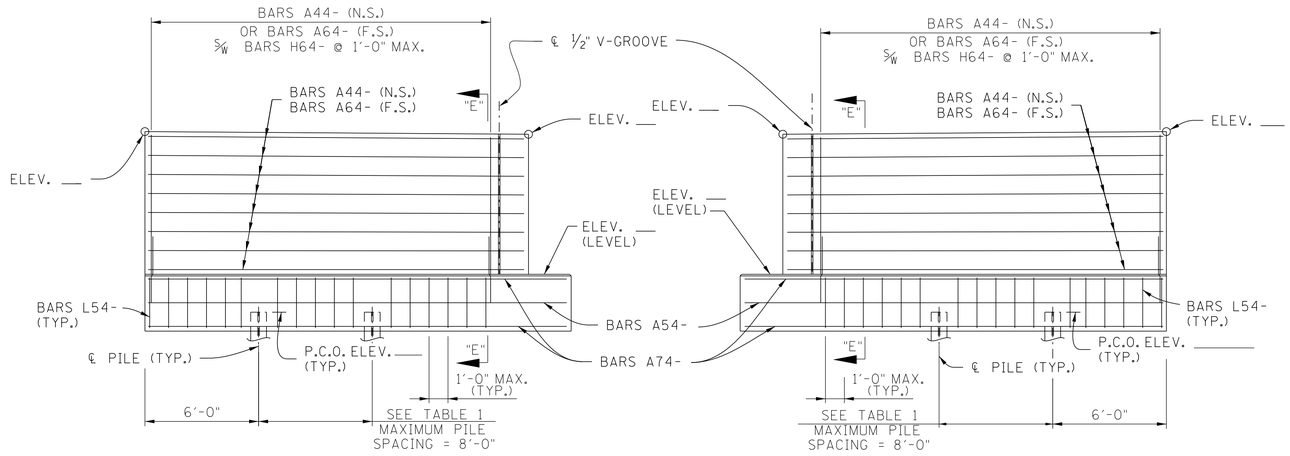

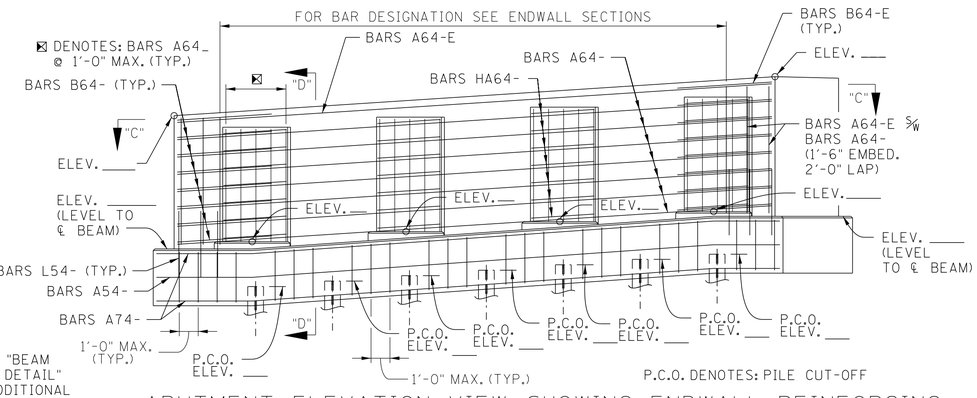

ABUTMENT ELEVATION VIEW SHOWING ENDWALL REINFORCING

STATE OF TENNESSEE
DEPARTMENT OF TRANSPORTATION

STANDARD DETAILS FOR STUB ABUTMENTS 2025

DESIGN BY:	KDM	DATE: 5-25
DRAWN BY:	KDM	DATE: 5-25
SUPERVISED BY:	ALP	DATE: 5-25
CHECKED BY:	ALP	DATE: 5-25

7/1/2025 8:47:05 AM C:\USERS\JU02135\ONEDRIVE - TENNESSEE\DESKTOP\SAVED PROJECTS\SMO033\SDGABT.DGN

FIGURE 2. STANDARD DETAILS FOR STUB ABUTMENTS

REVISIONS			
NO.	DATE	BY	BRIEF DESCRIPTION

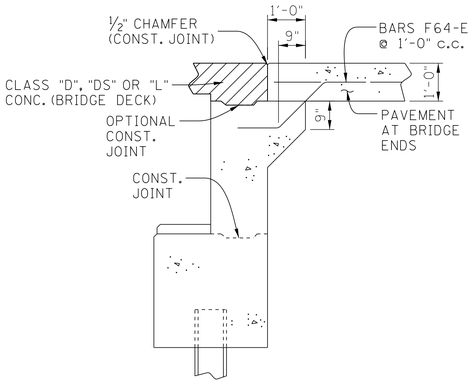

SECTION "D"-"D"
(SHOWING PAVEMENT AT BRIDGE ENDS)

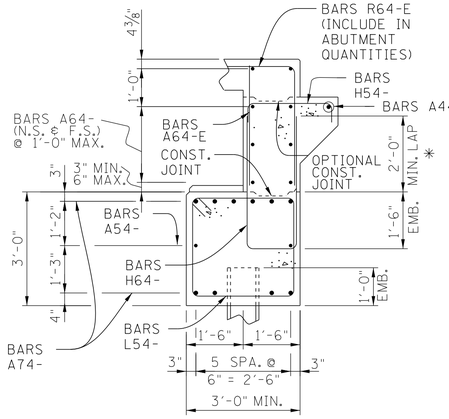

SECTION "D"-"D"
(INTEGRAL WITH SUPERSTRUCTURE)
(ENDWALL HEIGHT LESS THAN 4'-0")

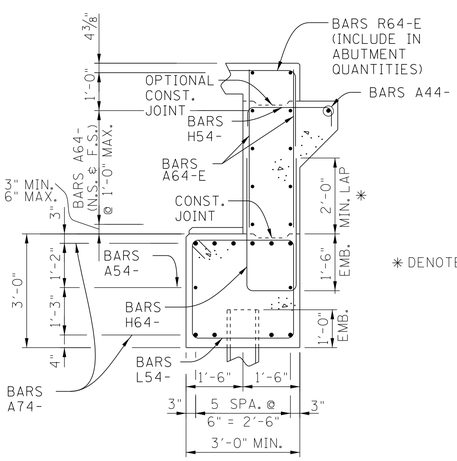

SECTION "D"-"D"
(INTEGRAL WITH SUPERSTRUCTURE)
(ENDWALL HEIGHT GREATER THAN OR EQUAL TO 4'-0")

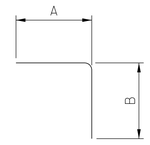

BARS R64-E

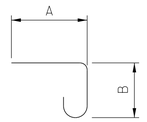

BARS RB64-E

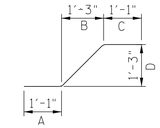

BARS F64-E

A = DEVELOPMENT LENGTH + ENDWALL THICKNESS - 2"
B = CLASS "B" SPLICE LENGTH + SLAB THICKNESS - 3"
FOR BRIDGES WITH SHORT BEAM HEIGHTS THAT DO NOT PROVIDE ENOUGH ROOM FOR A FULL "B" DIMENSION, USE BARS RB64-E INSTEAD WITH A HOOK ON THE VERTICAL LEG.

* DENOTES: THE PROJECTION OF THE H64- BARS MUST BE GREATER THAN 2'-0" IN ORDER FOR CONSTANT LENGTH A64-E BARS TO BE USED AND MAINTAIN AT LEAST 2'-0" OF LAP. THIS IS DUE TO THE VARYING HEIGHT OF THE ENDWALL. THE LENGTH OF THE A64-E BARS IS CALCULATED AS THE SHORTEST HEIGHT OF THE ENDWALL MINUS 2". THE PROJECTION OF THE H64- BARS IS CALCULATED AS 2'-0" PLUS THE DIFFERENCE IN THE SHORTEST AND TALLEST ENDWALL HEIGHTS.

◑ DENOTES: USE 1'-6" FOR ALL WINGWALLS UNLESS AN ALTERNATE PARAPET OR BRIDGE RAIL IS USED WITH A BASE DIMENSION LARGER THAN 1'-6".

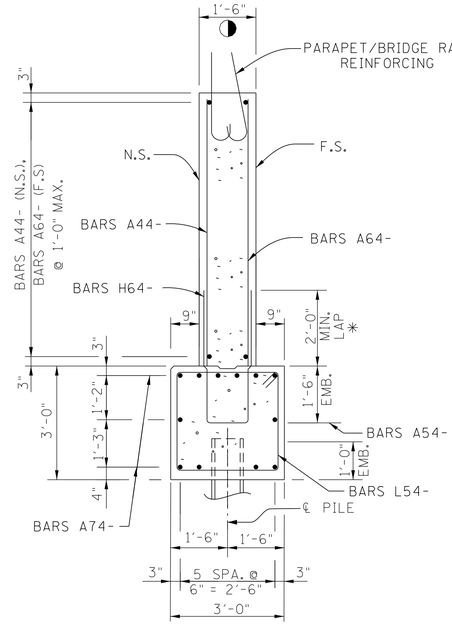

SECTION "E"-"E"

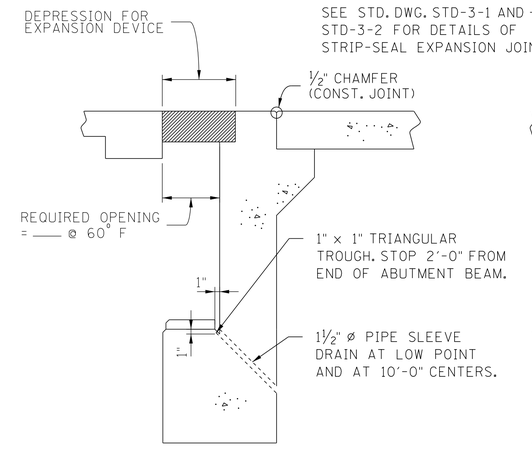

SECTION "D"-"D"
(SHOWING MODULAR EXPANSION JOINT)
(REINFORCING SIMILAR TO REINFORCING FOR INTEGRAL ABUTMENT - NOT SHOWN FOR CLARITY)

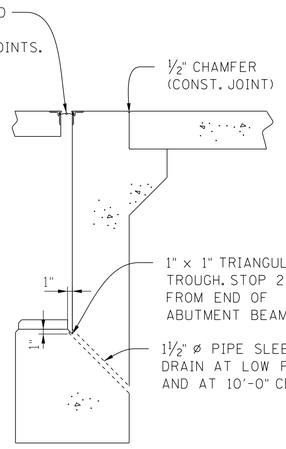

SECTION "D"-"D"
(SHOWING STRIP-SEAL EXPANSION JOINT)
(REINFORCING SIMILAR TO REINFORCING FOR INTEGRAL ABUTMENT - NOT SHOWN FOR CLARITY)

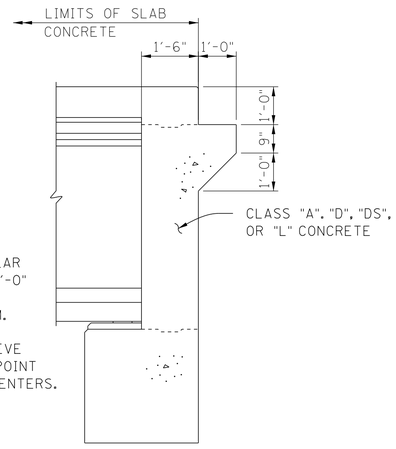

SECTION "D"-"D"
(SHOWING INTEGRAL ABUTMENT)



RISER BLOCK SLOPE DETAIL

NOTE: RISER BLOCK BEARING SURFACE TO CONFORM TO BOTTOM OF BEAM GRADE. [USE FOR ALL BRIDGES WITH ELASTOMERIC PADS OR SLIDING BEARING DEVICES WHEN BOTTOM OF BEAM SLOPE IS NUMERICALLY EQUAL TO OR GREATER THAN 0.0052 FT. PER FT. (1/16" PER FT.). SHOW ACTUAL RISER BLOCK SLOPE DIMENSIONS ON THE DETAIL. THE RISER BLOCK BEARING SURFACE CAN BE POURED LEVEL WHEN A HINGED (NON-EXPANSION) JOINT BEARING DEVICE IS USED.]

STATE OF TENNESSEE
DEPARTMENT OF TRANSPORTATION

STANDARD DETAILS FOR STUB ABUTMENTS 2025

DESIGN BY:	KDM	DATE:	5-25
DRAWN BY:	KDM	DATE:	5-25
SUPERVISED BY:	ALP	DATE:	5-25
CHECKED BY:	ALP	DATE:	5-25

7/2/2025 1:09:31 PM C:\USERS\JJ02135\ONEDRIVE - TENNESSEE\DESKTOP\SAVED PROJECTS\SMOO33\SDGABT.DGN

FIGURE 3. STANDARD DETAILS FOR STUB ABUTMENTS

REVISIONS			
NO.	DATE	BY	BRIEF DESCRIPTION

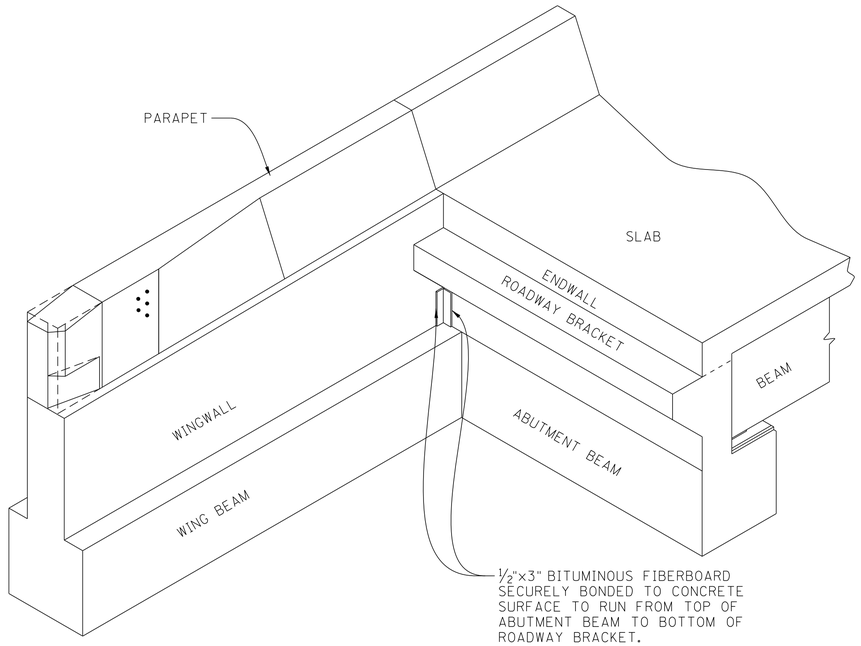

ISOMETRIC OF ABUTMENT WITH INTEGRAL SUPERSTRUCTURE

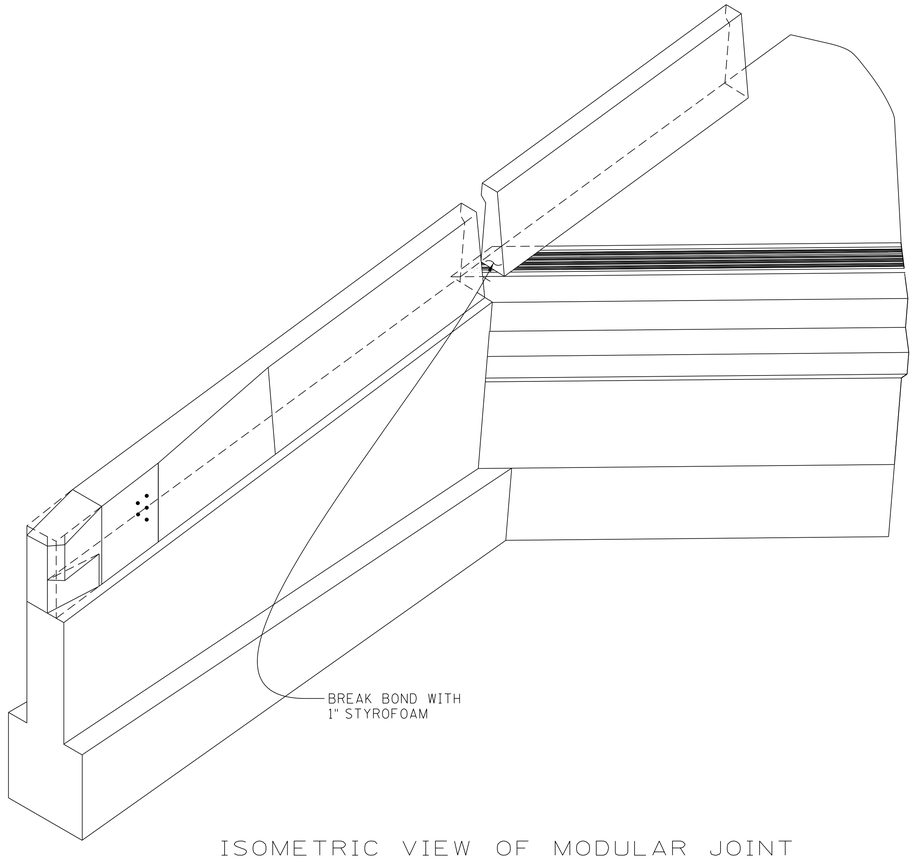

ISOMETRIC VIEW OF MODULAR JOINT

(STRIP SEAL JOINT SIMILAR)
(SLIDER PLATE NOT SHOWN)

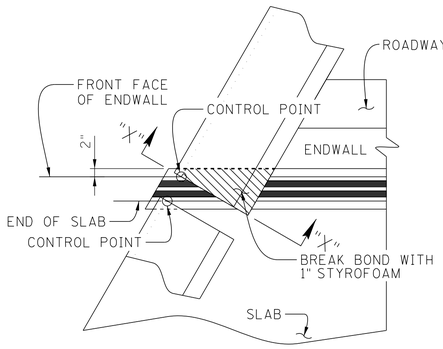

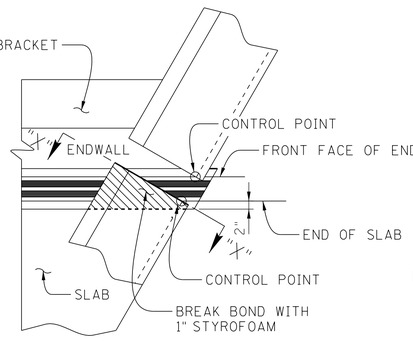

PLAN VIEW OF EXPANSION JOINT

NOTE: SEE STD-7-1 FOR DETAILS WHEN STD-7-1 BRIDGE RAIL IS USED.

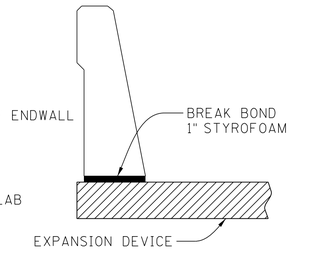

SECTION "X"-"X"

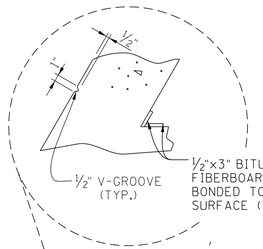

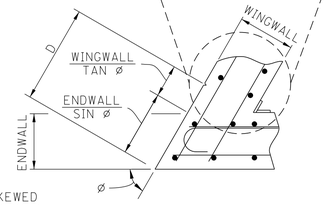

$$D = \frac{\text{ENDWALL}}{\sin \varnothing} \pm \frac{\text{WINGWALL}}{\tan \varnothing}$$

WHEN CALCULATING "D" FOR SKEWED BRIDGES, USE + FOR ACUTE CORNER AND USE - FOR OBTUSE CORNER. IGNORE SECOND TERM FOR NON-SKEWED BRIDGES.

V-GROOVE DETAILS

(ACUTE CORNER OF SKEWED BRIDGE SHOWN)

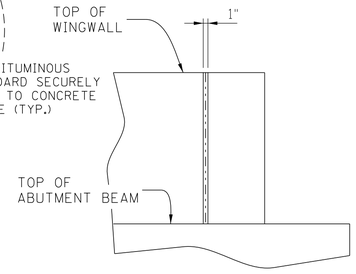

V-GROOVE LIMITS

STATE OF TENNESSEE
DEPARTMENT OF TRANSPORTATION

STANDARD DETAILS
FOR STUB ABUTMENTS
2025

DESIGN BY:	KDM	DATE:	5-25
DRAWN BY:	KDM	DATE:	5-25
SUPERVISED BY:	ALP	DATE:	5-25
CHECKED BY:	ALP	DATE:	5-25

7/2/2025 10:02:58 AM

FIGURE 4. STANDARD DETAILS FOR STUB ABUTMENTS

Works Cited

AASHTO, *LRFD Bridge Design Specifications.* 10th. Washington, D. C.: American Association of State Highway and Transportation Officials, 2024.