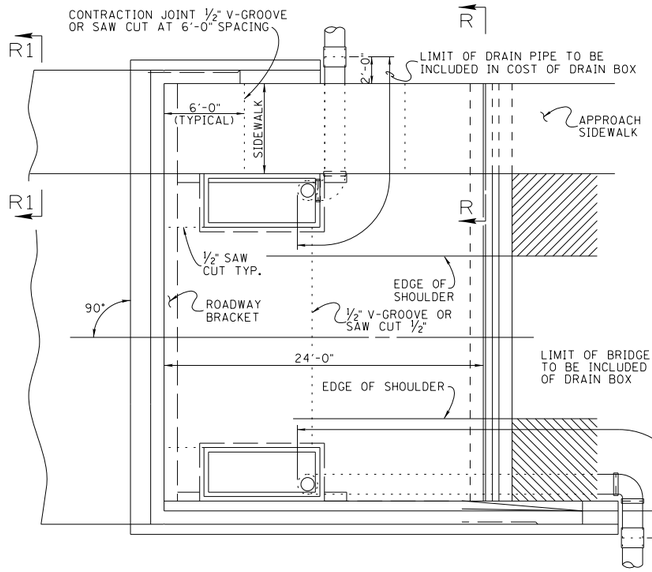

PLAN
(SHOWING DRAIN PIPE LOCATION)
(6" PERFORATED PIPE NOT SHOWN)

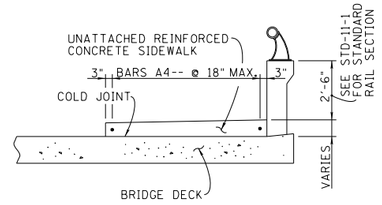

SECTION R1 - R1
NOTE: COST OF UNATTACHED REINFORCED CONCRETE SIDEWALK TO BE INCLUDED IN SIDEWALK CONCRETE PAY ITEM.

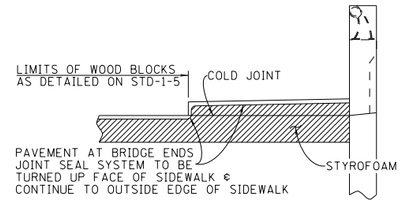

SECTION R - R
NOTE: COST OF UNATTACHED REINFORCED CONCRETE SIDEWALK TO BE INCLUDED IN SIDEWALK CONCRETE PAY ITEM.

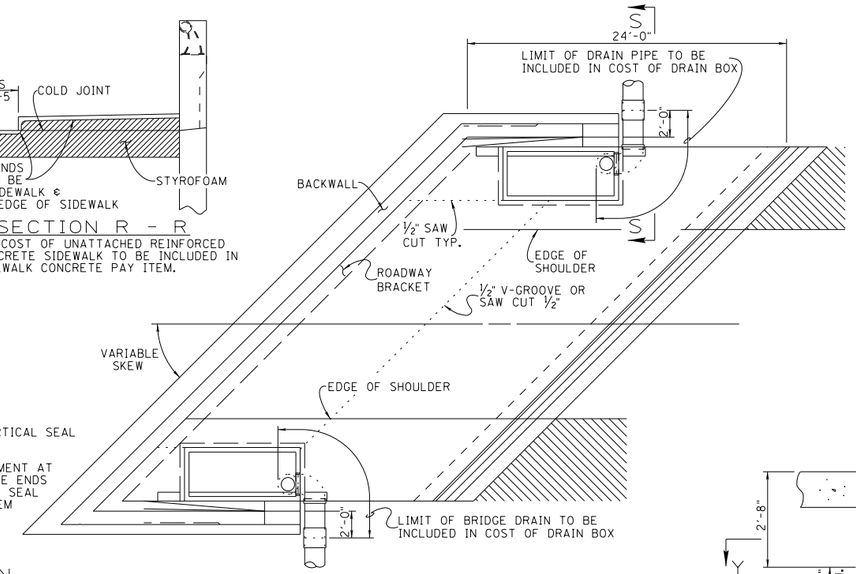

PLAN
(SHOWING DRAIN PIPE LOCATION)
(6" PERFORATED PIPE NOT SHOWN)

PROJECT NO.	YEAR	SHEET NO.
	2021	

REVISIONS

NO.	DATE	BY	BRIEF DESCRIPTION
1	5/10/21	TAK	RE-ISSUED DRAWING

NOTE: FOR ADDITIONAL DETAILS SEE STD-1-1 THRU 5 AND 6, 8 OR 9.

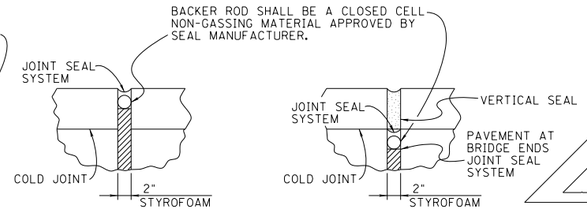

TYPICAL SECTION THRU SIDEWALK

TYPICAL SECTION @ CURB FACE

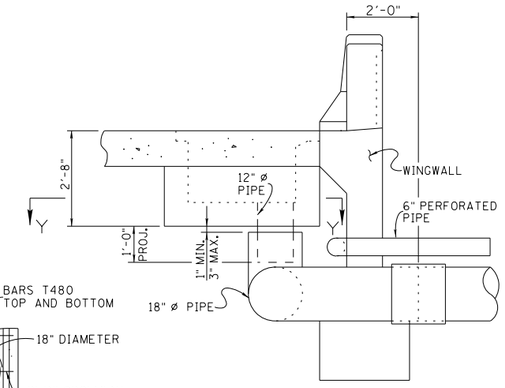

SECTION S - S
(SHOWING STUB ABUTMENT)

NOTE: LOCATE 12" ø PIPE AT LOW END OF DRAIN BOX.

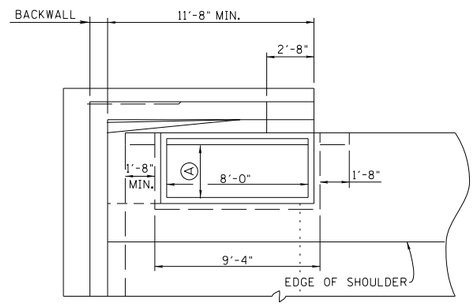

PART PLAN
(A) 1'-0" FOR 2' x 8'-7" DRAIN BOX
3'-0" FOR 4' x 8'-7" DRAIN BOX

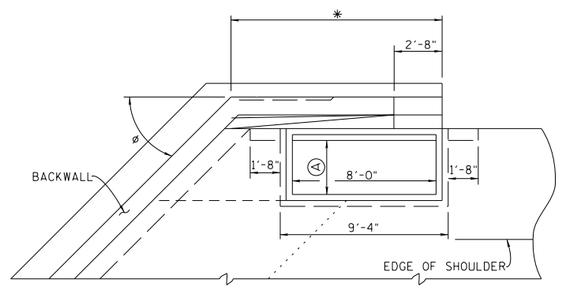

[BACKWALL + ROADWAY BRACKET / SIN ø]-[1'-9" / TAN ø] + 10'-8" = *

PART PLAN
(A) 1'-0" FOR 2' x 8'-7" DRAIN BOX
3'-0" FOR 4' x 8'-7" DRAIN BOX

MINIMUM WING LENGTHS FOR DRAIN PLACEMENT

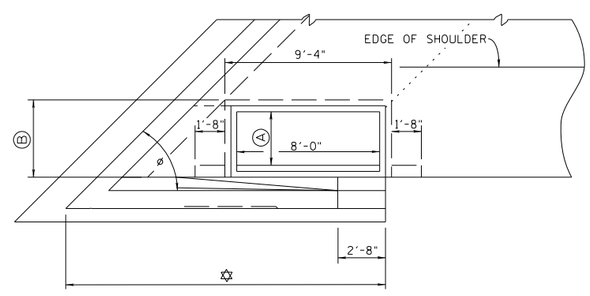

LESS THAN 66 DEGREES (2' x 8'-7")
[4'-1" / TAN ø] + 9'-0" + [(ROADWAY BRACKET + BACKWALL) / SIN ø] = ✡

LESS THAN 66 DEGREES (4' x 8'-7")
[6'-1" / TAN ø] + 9'-0" + [(ROADWAY BRACKET + BACKWALL) / SIN ø] = ✡

EQUAL TO OR GREATER THAN 66 DEGREES
10'-8" + [(ROADWAY BRACKET + BACKWALL) / SIN ø] + [2'-5" / TAN ø] = ✡

PART PLAN
(A) 1'-0" FOR 2' x 8'-7" DRAIN BOX
3'-0" FOR 4' x 8'-7" DRAIN BOX
(B) 2'-4" FOR 2' X 8'-7" DRAIN BOX
4'-4" FOR 4' x 8'-7" DRAIN BOX

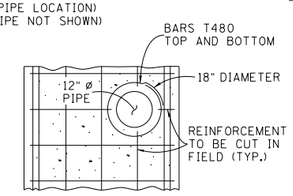

SECTION Y - Y

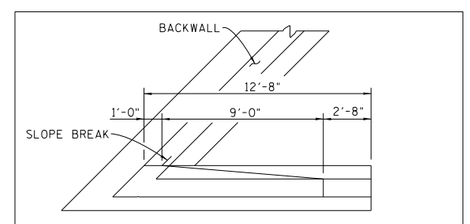

WING WITHOUT BRIDGE END DRAIN

NOTE: SPREAD WIDTH NOT TO EXCEED 6 FEET.

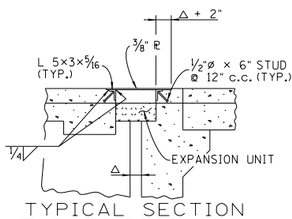

TYPICAL SECTION THRU SIDEWALK & EXPANSION JOINT @ BACKWALL

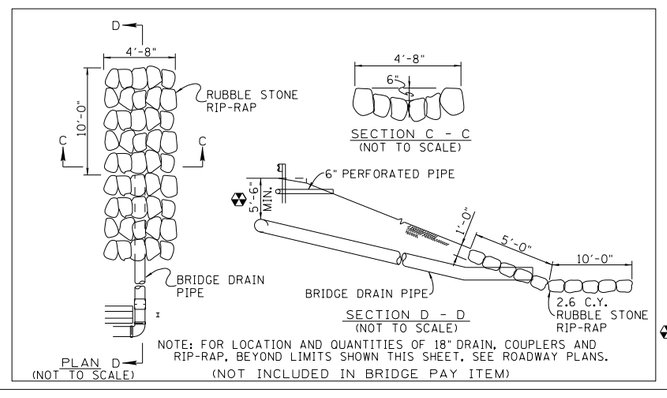

NOTE: FOR LOCATION AND QUANTITIES OF 18" DRAIN, COUPLERS AND RIP-RAP, BEYOND LIMITS SHOWN THIS SHEET, SEE ROADWAY PLANS.
(NOT INCLUDED IN BRIDGE PAY ITEM)

NOTE TO DETAILER:
FOR FIGURING WING LENGTHS USE THE GREATER VALUE PRODUCED BY THE METHOD FOUND IN STRUCTURES MEMORANDUM MISCELLANEOUS ABUTMENT DETAILS OR THE MINIMUM WING LENGTH FOR DRAIN PLACEMENT FORMULAS FOUND ON THIS SHEET.

NOTE: WINGWALLS PER ABUTMENT SHOULD BE THE SAME LENGTH.

✡ NOTE: IF CONDITIONS PREVENT THE 18"ø BRIDGE DRAIN PIPE FROM BEING LOCATED AT THE DEPTH SHOWN, THE PIPE MAY BE RUN HORIZONTALLY PARALLEL TO THE WING FOR 7'-3½" PAST THE END OF WING AND THEN TURNED TO PASS BETWEEN GUARDRAIL POSTS (4) AND (5) (SEE S-GR-23).

STATE OF TENNESSEE
DEPARTMENT OF TRANSPORTATION

1 BRIDGE END DRAIN DETAILS 2' x 8'-7" & 4' x 8'-7" WITH PAVEMENT AT BRIDGE ENDS 2021

DESIGNED BY C.M. HILES DATE
DRAWN BY KIM FRANKENFIELD DATE
SUPERVISED BY C.M. HILES DATE
CHECKED BY DATE

CORRECT Ted A Kmiecewicz
ENGINEER OF STRUCTURES