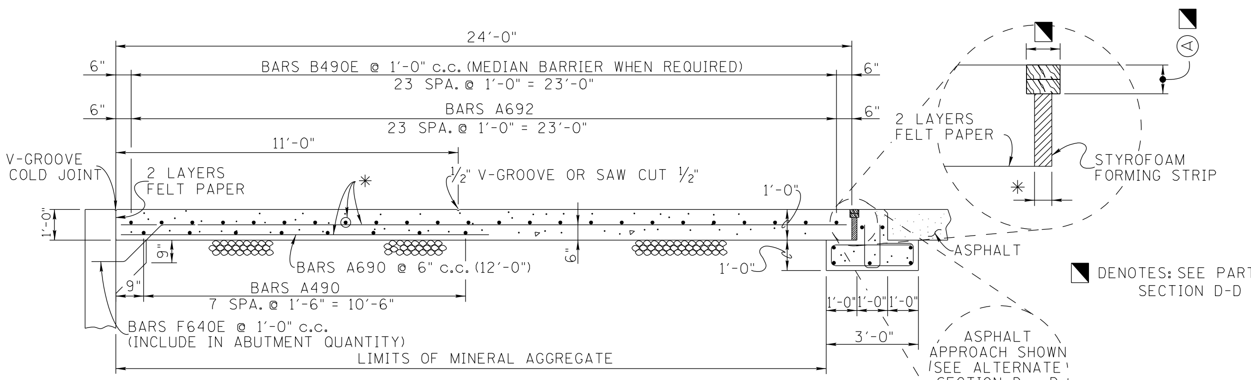

SECTION A - A

* NOTE: WHEN BRIDGE END DRAINS ARE REQUIRED, ANY REINFORCING STEEL INTERFERING WITH BRIDGE END DRAIN SHALL BE CUT IN FIELD.

DENOTES: SEE PARTIAL SECTION D-D

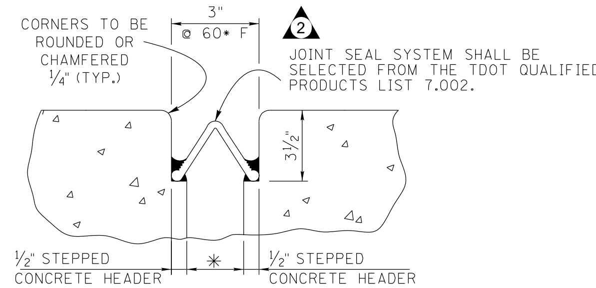

PARTIAL SECTION D - D
(COMPLETED DETAIL)

* 4-in. @ 20° F, 2-in. @ 60° F, 0-in. @ 100° F
TDOT INSPECTOR TO VERIFY FORMED OPENING GAP IS CORRECT AT THE TIME OF CONCRETE POUR FOR APPROACH SLAB

BILL OF STEEL

BARS	LOCATION	SIZE	NO. REQ'D	BENDING DIMENSIONS A	B	C	D	LENGTH
B490E	MEDIAN (WHEN REQ'D.)	4	48					2'-8"
A490	SLAB	4	8					▲
A690	SLAB	6	▲					12'-0"
A691	SLAB	6	▲					23'-8"
A692	SLAB ✡	6	31					▲
H490	FOOTING ✡	4	▲	6"	1'-4"			3'-4"
L490	FOOTING	4	▲	2'-7¼"	1'-0"	8"		7'-6½"

▲ THESE NUMBERS VARY DEPENDING UPON ROADWAY WIDTH.

PROJECT NO.	YEAR	SHEET NO.
	2021	

REVISIONS

NO.	DATE	BY	BRIEF DESCRIPTION
1	5/10/21	TAK	RE-ISSUED DRAWING
2	3/01/22	TAK	REVISED SECTIONS AND NOTES

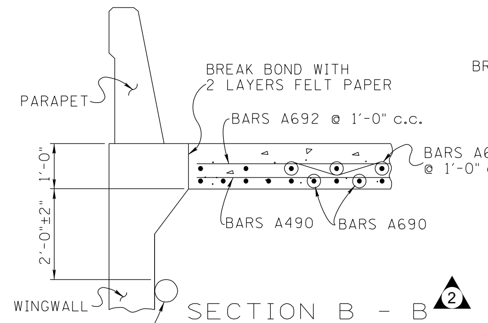

SECTION B - B (2)

NOTE: SLAB TO BE POURED DIRECTLY ON MINERAL AGGREGATE BASE STONE.

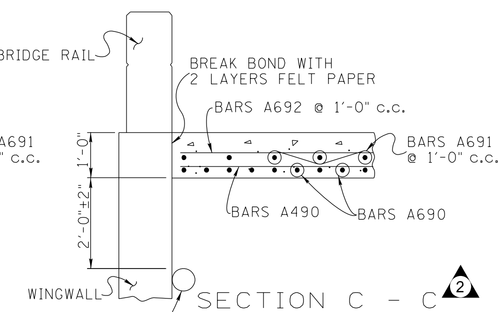

SECTION C - C (2)

NOTE: SLAB TO BE POURED DIRECTLY ON MINERAL AGGREGATE BASE STONE.

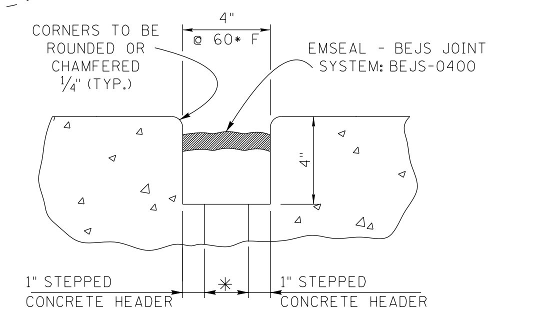

ALT PARTIAL SECTION D - D
(COMPLETED DETAIL)

* 4-in. @ 20° F, 2-in. @ 60° F, 0-in. @ 100° F
TDOT INSPECTOR TO VERIFY FORMED OPENING GAP IS CORRECT AT THE TIME OF CONCRETE POUR FOR APPROACH SLAB

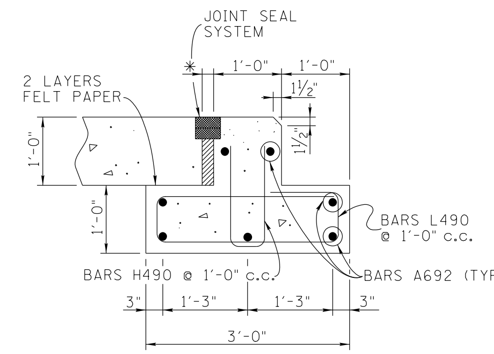

ALTERNATE SECTION D - D
(ASPHALT APPROACH)

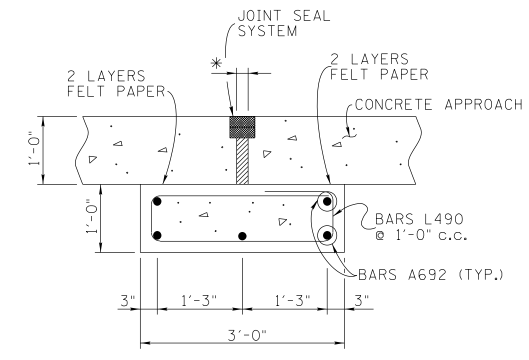

ALTERNATE SECTION D - D
(CONCRETE APPROACH)
✡ OMIT BARS H490 & 2 BARS A692 WHEN USING THIS ALTERNATE SECTION D - D.

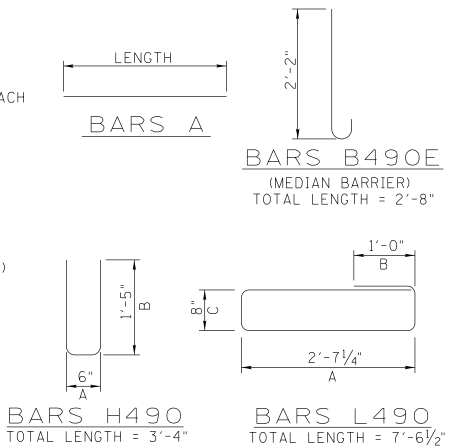

(2) NOTES

1. QUANTITIES FOR CLASS 'A' CONCRETE, REGULAR AND EPOXY COATED REINFORCING STEEL (WHEN REQUIRED FOR MEDIAN BARRIER), STYROFOAM, GRATE AND MISCELLANEOUS MATERIALS FOR BRIDGE END DRAIN, WHEN REQUIRED, ARE TO BE INCLUDED IN PAVEMENT AT BRIDGE ENDS, S.Y. FOR BAR BENDING DIMENSIONS SEE THIS SHEET AND BILL OF STEEL FOR BRIDGE END DRAIN ON DRAWING NO. STD-1-6.
2. COST OF MINERAL AGGREGATE TYPE "A" GRADING "D" BASE QUANTITY SHALL BE INCLUDED IN COST OF PAVEMENT AT BRIDGE ENDS. TYPE "B" GRADING "C" OR "D" MAY ALSO BE USED.
3. NOTE: TOP OF SLAB AND TOP OF END BEAM TO CONFORM TO ROADWAY SLOPE AND GRADE.

(2) GENERAL NOTES

CONCRETE: TO BE THE SAME CLASS AS USED FOR THE BRIDGE DECK PER THE BRIDGE PLANS (CLASS "D" OR "DS")

REINFORCING STEEL: SHALL BE ASTM A615 GRADE 60 UNLESS NOTED OTHERWISE. SEE SECTION 604 AND 907 OF THE STANDARD SPECIFICATIONS.

SPECIFICATIONS: STANDARD ROAD AND BRIDGE SPECIFICATIONS OF THE TENNESSEE DEPARTMENT OF TRANSPORTATION (CURRENT EDITION).

NOTE: THE APPROACH SLAB SHALL NOT BE POURED UNTIL THE ADJACENT END SPAN DECK SLAB IS IN PLACE AND ACCEPTED BY THE ENGINEER.

NOTE: THE APPROACH SLAB CONTROL ELEVATIONS SHALL BE ADJUSTED, (IF REQUIRED), TO MATCH THE IN PLACE DECK SLAB IN BOTH TRANSVERSE AND LONGITUDINAL DIRECTIONS.

(A) JOINT SEAL SYSTEM:
THE EXPANSION JOINT SYSTEM USED SHALL BE ON THE TDOT QUALIFIED PRODUCTS LIST. THE JOINT SYSTEM SHALL BE INSTALLED UNDER THE DIRECT SUPERVISION OF AN AUTHORIZED TECHNICIAN PROVIDED BY THE EXPANSION JOINT SUPPLIER. FOR EACH JOINT AT EACH BRIDGE AND FOR EACH BRIDGE LOCATION WITHIN THE PROJECT, THE TECHNICIAN MUST APPROVE ALL ASPECTS OF THE GEOMETRY AND PREPARATION, INCLUDING GRINDING AND/OR GROOVING, PRIOR TO ANY JOINT MATERIAL INSTALLATION.

NOTE: THE JOINT SEAL SYSTEM IS NOT REQUIRED WHEN THE BRIDGE HAS AN EXPANSION JOINT AT THE ADJACENT ABUTMENT.

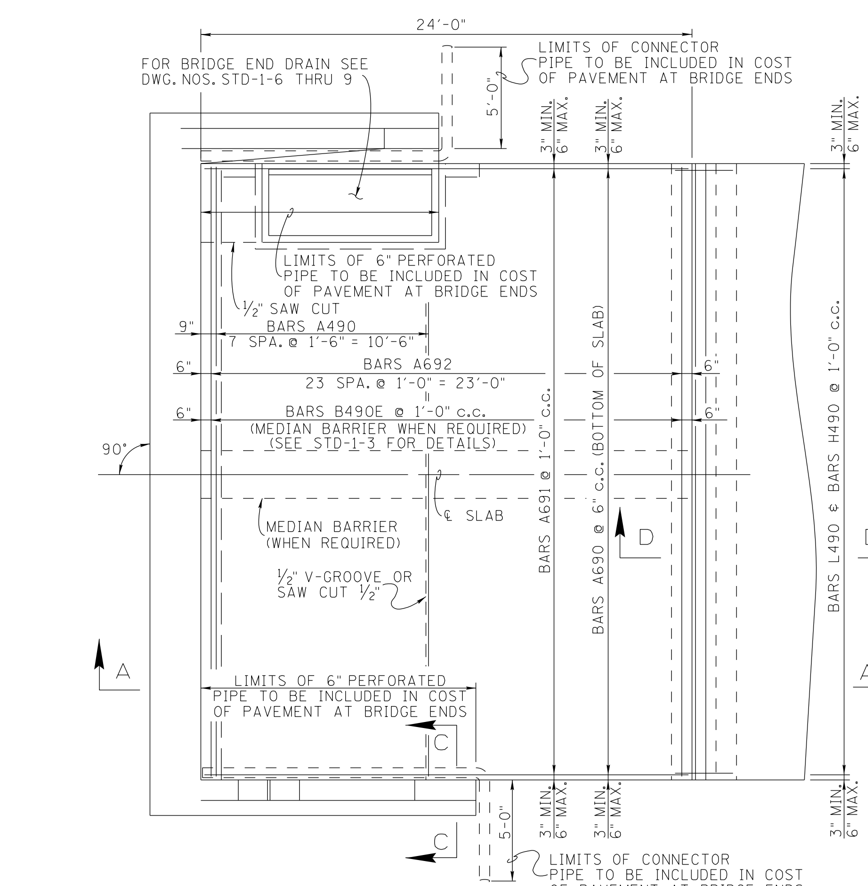

PLAN
(90° SKEW)

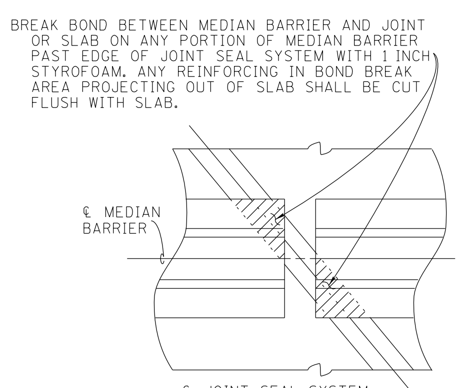

PLAN
(SHOWING DETAIL @ OPEN JOINT)

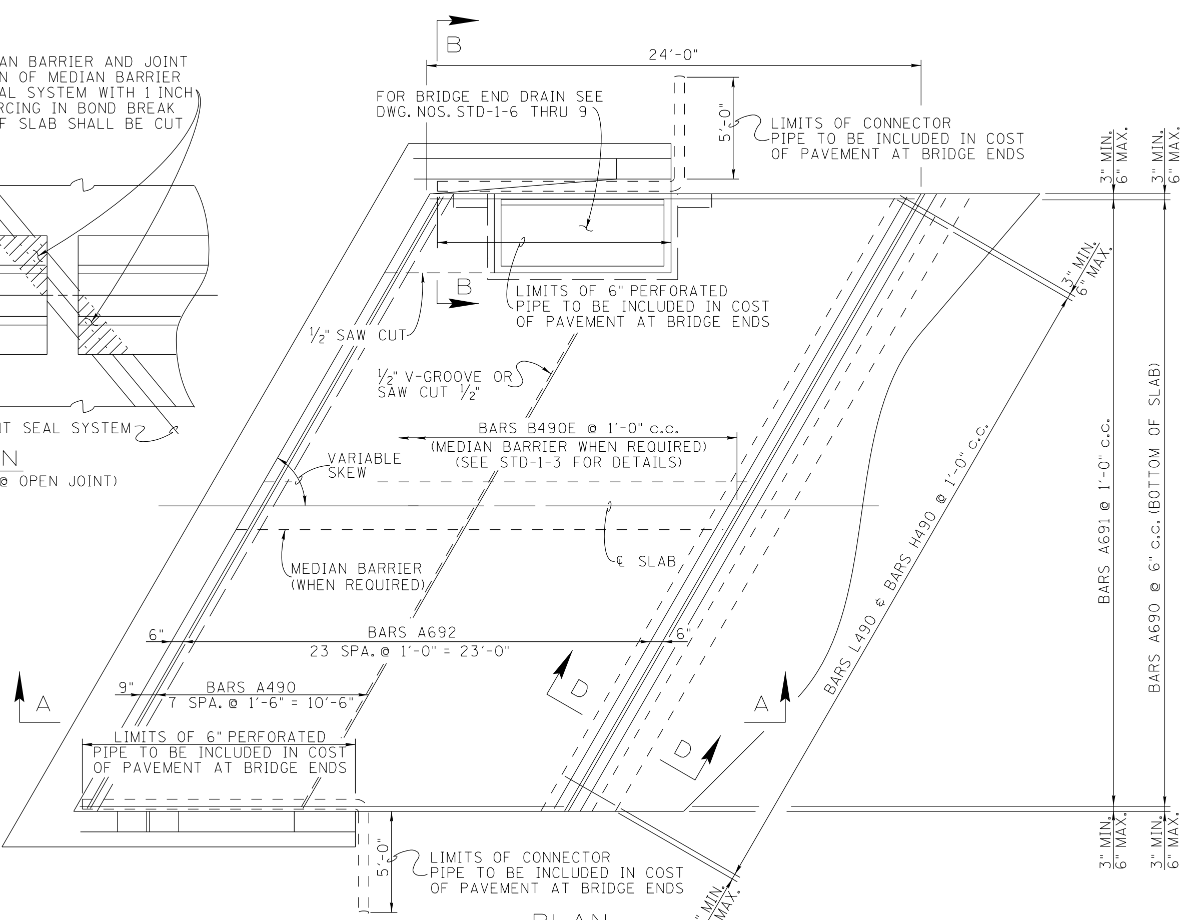

PLAN
(VARIABLE SKEW)

DESIGNED BY	C.M. HILES	DATE	
DRAWN BY	KIM FRANKENFIELD	DATE	
SUPERVISED BY	C.M. HILES	DATE	
CHECKED BY		DATE	

STATE OF TENNESSEE
DEPARTMENT OF TRANSPORTATION

(1) REINFORCED CONCRETE PAVEMENT AT BRIDGE ENDS 2021

CORRECT Ted A Kniazewycz
ENGINEER OF STRUCTURES

SHEET 5 OF 13
STD-1-5

$$$$$$$$dgnspec$$$$$$$$$$
$$$$$$$$date$$$$$$$$
$$$$$$$$time$$$$$$$$