PROJECT NO.	YEAR	SHEET NO.
	1982	

REVISIONS

NO	DATE	BY	BRIEF DESCRIPTION
1	6-2-86	E.L.D.	GENERAL REVISIONS
2	9-1-91	[illegible]	[illegible]

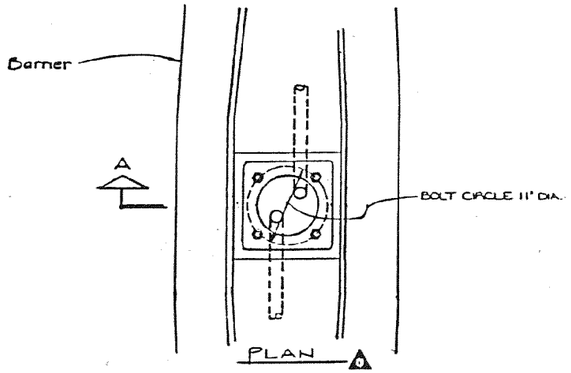

PLAN

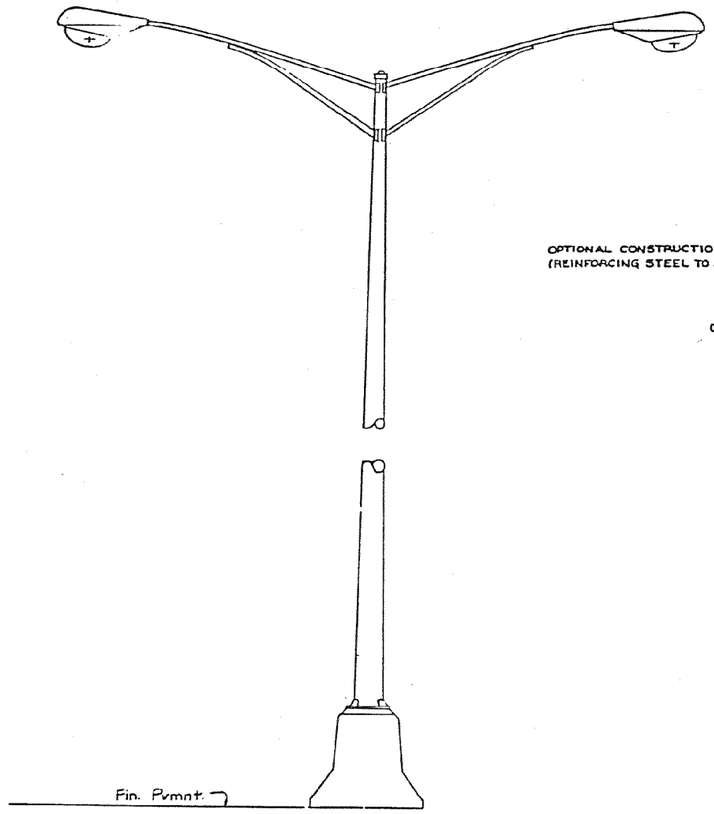

LIGHTING STANDARD DETAIL

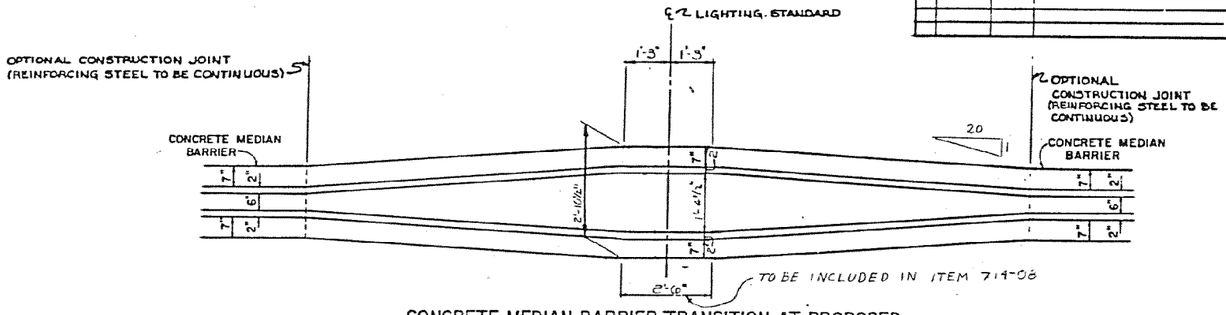

CONCRETE MEDIAN BARRIER TRANSITION AT PROPOSED LIGHTING STANDARD - PLAN-

NOTE: THE REINFORCING STEEL FOR MEDIAN BARRIER STANDARD LIGHT SUPPORT IS TO BE THE SAME SIZE, SPACING AND LOCATION AS DETAILED FOR MEDIAN BARRIER IN NON-FLARED SECTIONS.

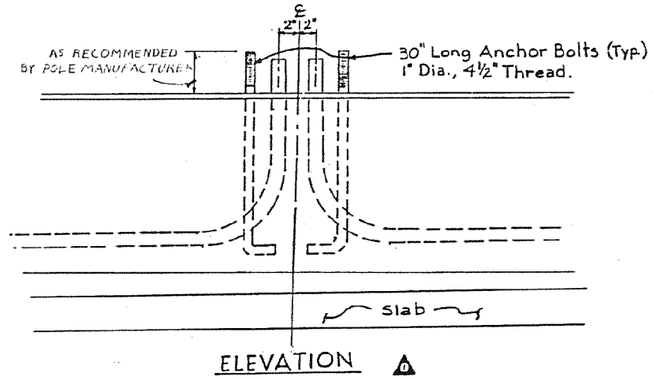

ELEVATION

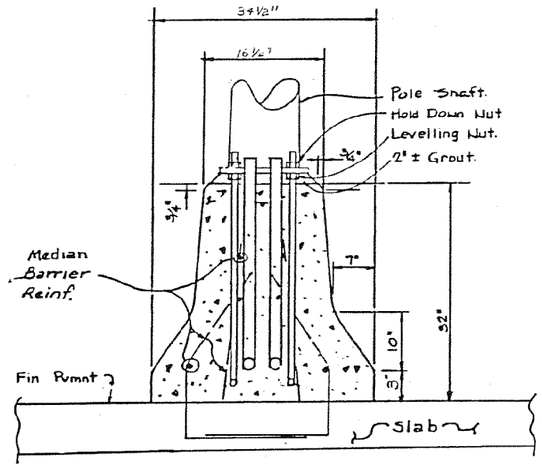

SECTION A

NOTE: 1. ALL COST OF THE TRANSITION FOR THE LIGHTING STANDARD TO BE INCLUDED IN THE UNIT PRICE BID FOR 711-03 REINFORCED CONCRETE MEDIAN BARRIER (BRIDGES)

1. STANDARD ROAD AND BRIDGE SPECIFICATIONS OF THE TENNESSEE DEPARTMENT OF TRANSPORTATION. (MARCH, 1981 EDITION.)
2. CONDUCTORS SHALL BE COPPER CONDUCTOR WITH 600 VOLT TYPE THWN-MTW, 75°C THERMOPLASTIC INSULATION WITH NYLON JACKET. CONDUCTORS NO. 10 AND SMALLER SHALL BE SOLID, SIZES NO. 8 AND LARGER SHALL BE STRANDED. ALL WIRING SHALL BE RUN IN SCHEDULE 40 POLYVINYL CONDUITS.
3. THIS CONSTRUCTION SHALL COMPLY WITH THE LATEST REVISIONS TO THE NATIONAL ELECTRICAL CODE. NFPA NO. 70, AND THE NATIONAL ELECTRICAL SAFETY CODE.
4. ALL INCIDENTAL EQUIPMENT AND MATERIAL REQUIRED FOR THE SUCCESSFUL EXECUTION OF THIS WORK SHALL BE FURNISHED WHETHER SPECIFICALLY NOTED OR NOT.
5. A SEPARATE GROUNDING CONDUCTOR SHALL BE RUN IN EACH RACEWAY, AND BONDED TO EACH POLE, METAL CABINET OR BOX. GROUNDING CONDUCTORS SHALL BE NO. 8 AWG. COPPER CONDUCTOR, WITH 600V TYPE TW INSULATION, GREEN COLOR.
6. PULL WIRES SHALL BE RUN IN EACH RACEWAY WHEN THE STANDARDS ARE TO BE INSTALLED UNDER A FUTURE CONTRACT.

STATE OF TENNESSEE
DEPARTMENT OF TRANSPORTATION

MEDIAN BARRIER STANDARD LIGHT SUPPORT DETAILS

DESIGNED BY _____ DATE _____
DRAWN BY _____ DATE _____
SUPERVISED BY R.L.H. DATE 2-82
CHECKED BY _____ DATE _____

CORRECT [signature] ENGINEER OF STRUCTURES

STD-8-3