NOTE: DETAILS SHOWN ARE FOR RAIL TO RUN COMPLETE LENGTH OF BRIDGE WITH POST SPACING AT 3'-1½" c.c.

Ⓐ NOTE: BEFORE SETTING BASE PLATES, TOP OF CURBS MAY REQUIRE REPAIR DUE TO SPALLING OF THE CONCRETE. WHEN REQUIRED, SURFACES SHALL BE CLEANED AND GROUTED SO AS TO OBTAIN A FLUSH CONNECTION FOR BASE PLATES. COST TO BE INCLUDED IN THE PRICE FOR PAY ITEMS.

NOTE: DETAILS ARE SHOWN FOR 2'-0" OR GREATER CURB WIDTHS FROM FACE OF EXISTING CONCRETE BRIDGERAIL.

PROJECT NO.	YEAR	SHEET NO.
	1992	

REVISIONS

NO.	DATE	BY	BRIEF DESCRIPTION
1	11-05-01	WS	REVISED DETAILS, ITEM NO'S. & DIMENSIONS
2	1-22-02	WS	MOVED GUARDRAIL TO FACE OF CURB

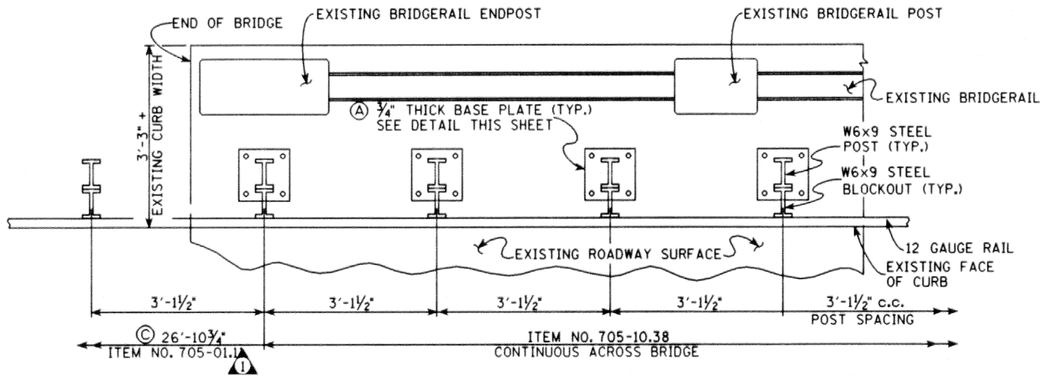

Ⓒ NOTE: SEE STANDARD DRAWING NO. BR-2-146 FOR DETAILS OF ITEM NO. 705-01.11.

2 PLAN

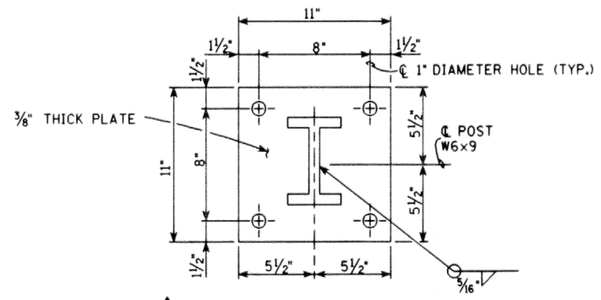

1 BASE PLATE DETAIL

GENERAL NOTES

SPECIFICATIONS: STANDARD ROAD AND BRIDGE SPECIFICATIONS OF THE TENNESSEE DEPARTMENT OF TRANSPORTATION (CURRENT EDITION).

DESIGN SPECIFICATIONS: AASHTO CURRENT EDITION WITH ADDENDA.

NON-PAY ITEMS: ONLY ITEMS SHOWN ON THE PROPOSAL AS PAY ITEMS WILL BE PAID FOR. COMPENSATION FOR ALL LABOR, MATERIALS, TOOLS, EQUIPMENT AND INCIDENTALS FOR THE ENTIRE CONTRACT SHALL BE INCLUDED IN THE PRICE FOR PAY ITEMS.

NOTE: DETAILS OF GUARDRAIL SHALL CONFORM TO STANDARD DRAWING S-GR-SERIES, EXCEPT FOR THE DETAILS SHOWN THIS SHEET.

NOTE: PROFILE OF NEW GUARDRAIL SHALL CONFORM TO THE EXISTING ROADWAY GRADE.

NOTE: NEW ¾" x 11" x 11" BASE PLATE SHALL CONFORM TO ASTM A36 AND SHALL BE GALVANIZED IN ACCORDANCE WITH ASTM A123.

NOTE: THE COST OF ALL NEW GUARDRAIL, BOLTS, BASE PLATES, DRILLING AND ALL LABOR AND MATERIALS NECESSARY TO COMPLETE THE NEW GUARDRAIL CONNECTONS AS SHOWN IN THESE DETAILS SHALL BE INCLUDED IN ITEM NO. 705-10.38, GUARDRAIL BRIDGERAIL ATTACHED TO BRIDGE CURBS, L.F.

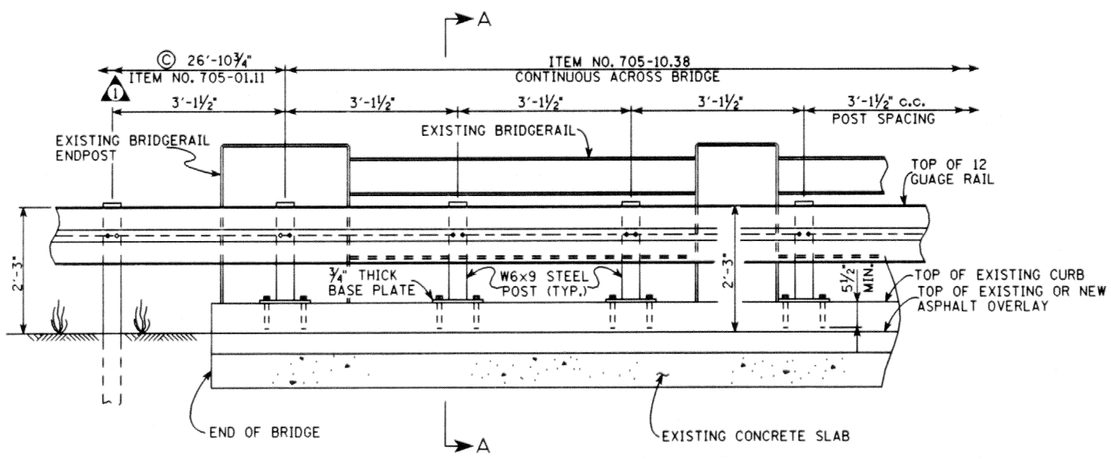

1 ELEVATION

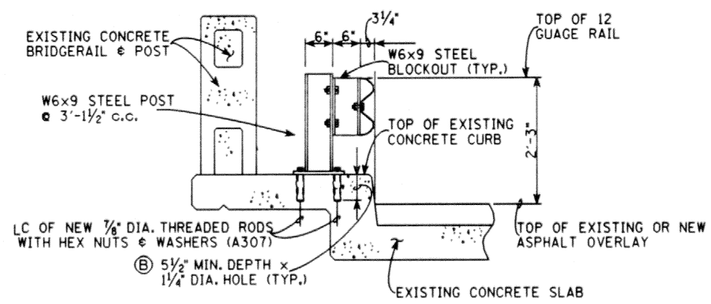

2 1 SECTION A - A

Ⓑ NOTE: 1¼" DIAMETER x 5½" MIN. DEEP HOLES FOR ⅞" DIAMETER THREADED RODS (A307) SHALL BE DRILLED WITH A HIGH SPEED DRILL. THE DRILL BIT SHALL BE CAPABLE OF DRILLING THROUGH EXISTING REINFORCING STEEL BARS AND CONCRETE. AFTER DRILLING, THE HOLES SHALL BE CLEANED OUT AND PACKED WITH A NON-SHRINK CEMENT GROUT AND THE THREADED RODS DRIVEN TO THEIR SEAT. A LIST OF APPROVED GROUTS MAY BE OBTAINED FROM THE TENNESSEE DEPARTMENT OF TRANSPORTATION, DIVISION OF MATERIALS AND TEST. ALL WORK MUST MEET WITH THE APPROVAL OF THE ENGINEER.

DETAIL GRA - 38
ITEM NO. 705-10.38
LIN. FOOT

STATE OF TENNESSEE
DEPARTMENT OF TRANSPORTATION

STANDARD SHOWING DETAILS OF ATTACHING GUARDRAIL BRIDGERAIL TO TOP OF EXISTING CURBS 1992

DESIGNED BY	McINTURFF	DATE	10-92
DRAWN BY	KDF & KLF	DATE	12-92
SUPERVISED BY	GENTRY & McINTURFF	DATE	12-92
CHECKED BY	McINTURFF	DATE	12-92

CORRECT Gene E. Hinds
C.E. MANAGER - INSPECTION AND REPAIR

APPROVED Kevin Evans
DEPUTY COMMISSIONER

1

SBR-2-144