PROJECT NO.	YEAR	SHEET NO.
	1992	

REVISIONS

	NO.	DATE	BY	BRIEF DESCRIPTION
B/R	1	2-21-95	T.O.	REMOVED SIGNATURES
B/R	2	4-4-95	TO	CHANGED STANDARD DRAWING NO.
B/R	3	1-4-96	TO	REVISED BR DRAWING NO. TO SBR DRAWING NO.
B/R	4	11-05-01	WS	REVISED ITEM NUMBERS

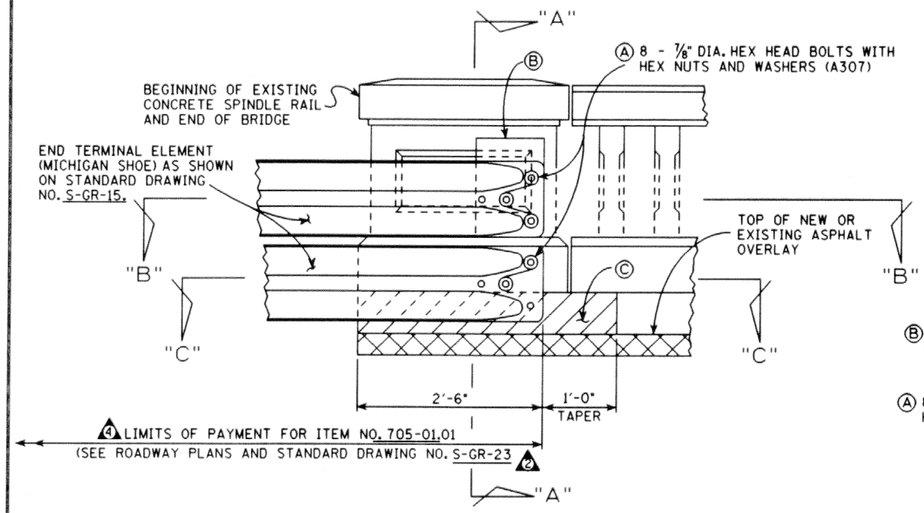

ELEVATION

(SHOWING NEW APPROACH GUARDRAIL ATTACHMENTS TO EXISTING CONCRETE SPINDLE RAIL ENDPOSTS)

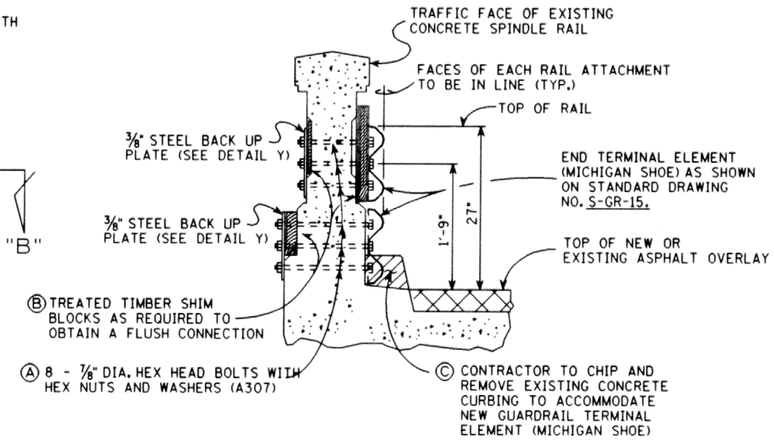

SECTION "A"-"A"

FOR ADDITIONAL CONNECTION DETAILS AT BRIDGE END SEE STANDARD DRAWING NO. S-GR-23 2

GENERAL NOTES

SPECIFICATIONS: STANDARD ROAD AND BRIDGE SPECIFICATIONS OF THE TENNESSEE DEPARTMENT OF TRANSPORTATOIN. (CURRENT EDITION)

CONCRETE: TO BE EPOXY, THE CONTRACTOR MAY OBTAIN A LIST OF ACCEPTABLE BRANDS OF EPOXY CONCRETE FROM THE TENNESEE DEPARTMENT OF TRANSPORTATION, DIVISION OF MATERIALS AND TEST.

NON-PAY ITEMS: ONLY ITEMS SHOWN ON THE PROPOSAL AS PAY ITEMS WILL BE PAID FOR. COMPENSATION FOR ALL LABOR, MATERIALS, TOOLS, EQUIPMENT, AND INCIDENTALS FOR THE ENTIRE CONTRACT SHALL BE INCLUDED IN THE PRICE FOR PAY ITEMS.

Ⓐ NOTE: HOLES FOR 7/8" DIA. BOLTS TO BE DRILLED WITH A HIGH SPEED DRILL. THE DRILL BIT SHALL BE CAPABLE OF DRILLING THROUGH EXISTING REINFORCING BARS AND CONCRETE. THE DIAMETER OF THE HOLES SHALL BE 1/4"(+) LARGER THAN THE BOLTS. COST OF DRILLING TO BE INCLUDED IN ITEMS BID ON.

NOTE: DETAILS FOR GUARDRAIL SHALL CONFORM TO STANDARD DRAWING S-GR-SERIES, EXCEPT FOR DETAILS SHOWN ON THIS SHEET.

NOTE: THE COST OF ALL NEW GUARDRAIL, BOLTS, WOOD SHIM BLOCKS, STEEL PLATES, DRILLING, AND ALL LABOR AND MATERIALS NECESSARY TO COMPLETE THE NEW GUARDRAIL CONNECTIONS AS SHOWN IN THESE DETAILS SHALL BE INCLUDED IN GUARDRAIL ITEMS BID ON.

Ⓑ NOTE: ALL WOOD SHIM BLOCKS SHALL BE CUT FROM PRESSURE TREATED TIMBER. SEE TENNESSEE STANDARD SPECIFICATIONS SECTION 911 - TIMBER AND TIMBER PILES.

Ⓒ NOTE: COST OF CHIPPING AND REMOVING PORTIONS OF THE EXISTING 6" CURBING AND TROWELING OF EPOXY CONCRETE TO BE INCLUDED IN ITEMS BID ON. ALL WORK MUST MEET WITH THE FULL APPROVAL OF THE ENGINEER.

NOTE: PROFILE OF NEW GUARDRAIL SHALL CONFORM TO THE EXISTING ROADWAY GRADE.

NOTE: ALL DETAILS SHOWN ARE TYPICAL AT EACH CORNER OF THE EXISTING BRIDGE.

NOTE: THE CONTRACTOR MAY OBTAIN A LIST OF ACCEPTABLE BRANDS OF EPOXY CONCRETE FROM THE TENNESSEE DEPARTMENT OF TRANSPORTATION, DIVISION OF MATERIALS AND TESTS.

4 2 NOTE: COST OF ALL ADDITIONAL MATERIALS AND LABOR NECESSARY TO ATTACH THE NEW APPROACH GUARDRAIL TO THE EXISTING BRIDGE SHALL BE INCLUDED IN ITEM NO. 705-01.01. SEE STANDARD DRAWING NO. S-GR-23 FOR DETAILS NOT SHOWN ON THIS SHEET.

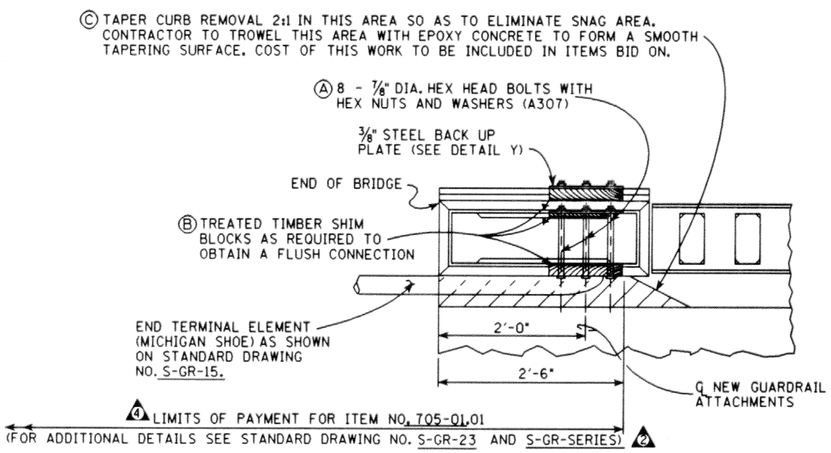

SECTION "B"-"B"

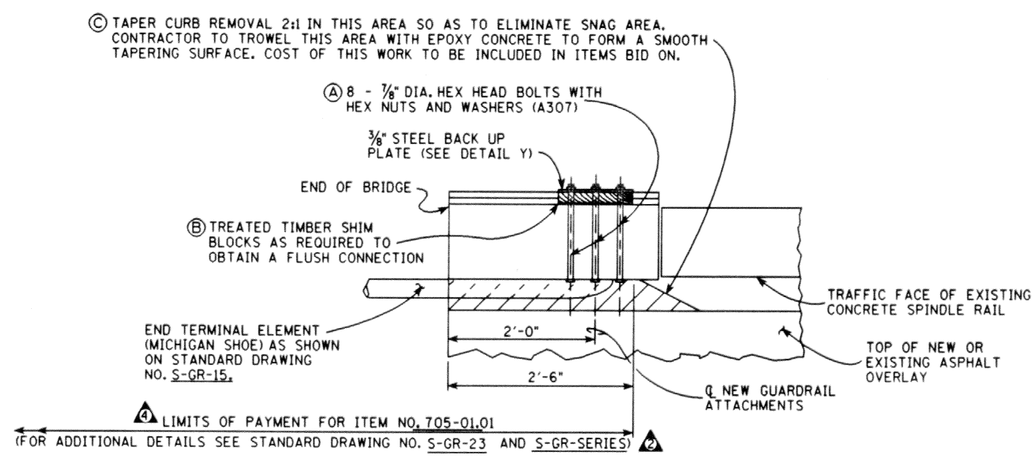

SECTION "C"-"C"

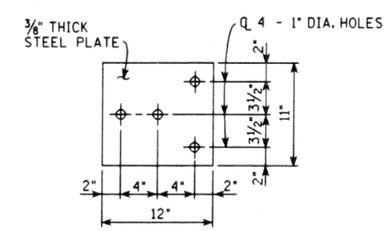

DETAIL Y

STATE OF TENNESSEE
DEPARTMENT OF TRANSPORTATION

STANDARD
SHOWING DETAILS FOR
ATTACHING NEW GUARDRAIL
TO EXISTING END OF BRIDGE
1992

B/R MINOR REVISION - FHWA APPROVAL NOT REQUIRED

DESIGNED BY	McINTURFF	DATE	
DRAWN BY	K.L. FRANKENFIELD	DATE	9-92
SUPERVISED BY	GENTRY & McINTURFF	DATE	9-92
CHECKED BY	McINTURFF	DATE	

1 3 SBR-2-137