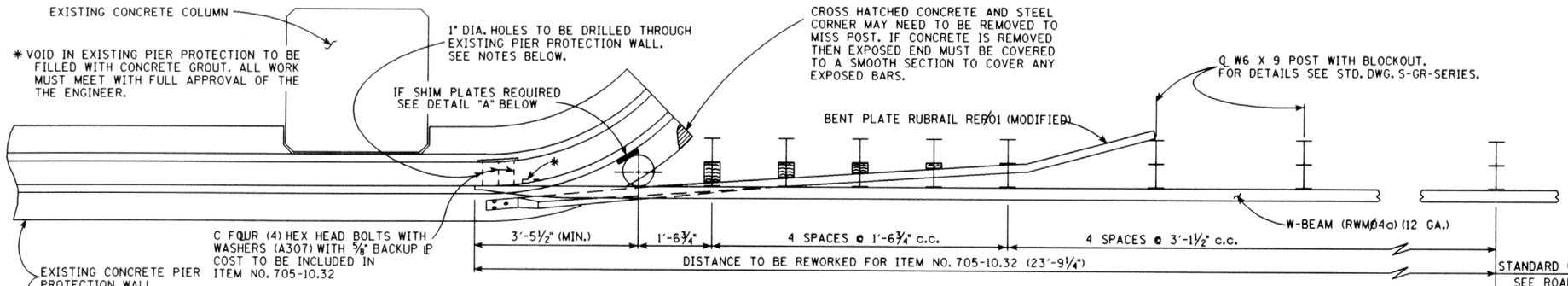

1 PLAN

ELEVATION

IT MAY BECOME NECESSARY FOR THE CONTRACTOR TO CHIP AND REMOVE A SMALL PORTION OF CONCRETE ALONG THE EXISTING SLOPED FACE OF THE CURVED SECTION IN THIS AREA IN ORDER TO OBTAIN A FLUSH SURFACE AND THE CORRECT HEIGHT FOR ATTACHING THE GUARDRAIL. COST TO BE INCLUDED IN ITEMS BID ON.

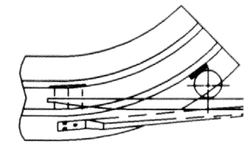

PLAN

(ALTERNATE ATTACHMENT)

PROJECT NO.	YEAR	SHEET NO.
	1991	

REVISIONS

	NO.	DATE	BY	BRIEF DESCRIPTION
	1	10-28-91	T.C.	GENERAL REVISIONS
	2	11-16-92	W.M.M.	REVISED DRAWING NUMBERS.
B/R	3	2-22-95	T.Q.	REMOVED SIGNATURES
B/R	4	1-4-96	TQ	REVISED BR DRAWING NO. TO SBR DRAWING NO.
B/R	5	11-05-01	WS	REVISED NOTE
B/R	6	1-22-02	WS	REVISED MATERIAL DESCRIPTION

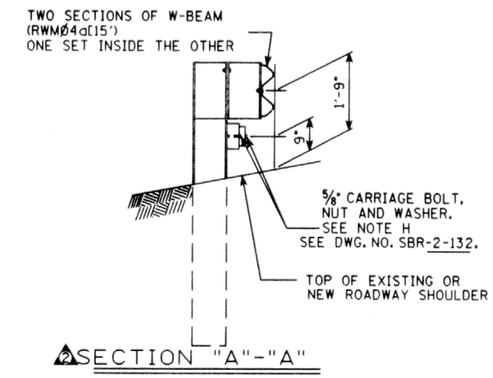

2 SECTION "A"-"A"

SPECIAL NOTE TO CONTRACTOR: THE CONTRACTOR SHALL HAVE THE NEW BENT PLATE RUBRAIL (RER01) C6 X 8.2 RUBRAIL (RERO1), AND THE W-BEAM (RWMØ4a) SECTIONS SHALL BE SHOP FABRICATED TO ALIGN AND MEET ALL CONNECTION REQUIREMENTS AS SHOWN ON THESE DETAILS. NO VARIATIONS WILL BE ALLOWED IN POST ℄ BLOCK-OUT SPACING. IT SHALL BE THE FULL RESPONSIBILITY OF THE CONTRACTOR TO FIELD MEASURE EACH INDIVIDUAL CONNECTION LOCATION BEFORE ANY SHOP FABRICATION OF THE RAILING IS BEGUN TO INSURE PROPER ALIGNMENT AND CONNECTION. SHOP DRAWINGS BASED ON FIELD MEASUREMENTS MUST BE APPROVED BY THE ENGINEER PRIOR TO ORDERING MATERIALS. ALL WORK MUST MEET WITH THE FULL APPROVAL OF THE ENGINEER, AND IF THE CONNECTIONS MUST BE CORRECTED FOR ANY REASON, IT SHALL BE AT THE FULL EXPENSE OF THE CONTRACTOR.

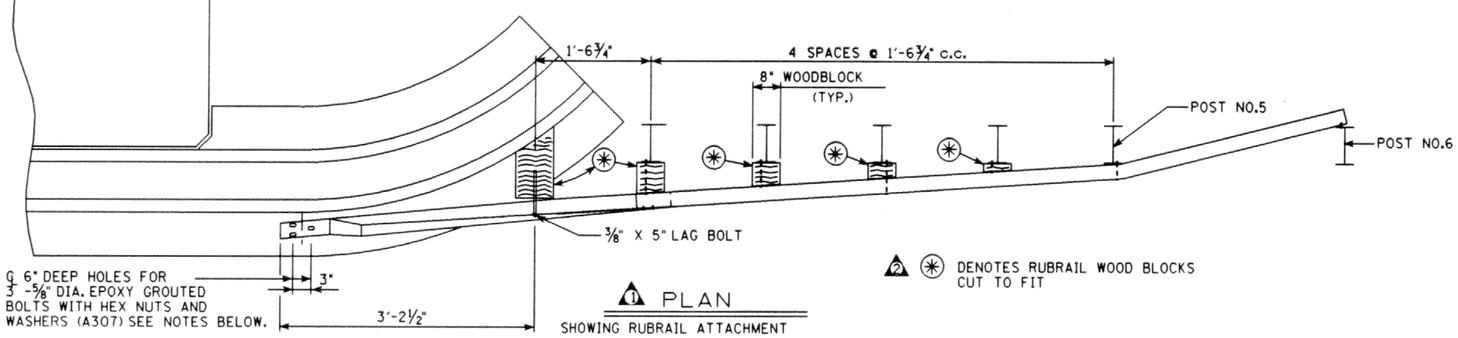

1 PLAN

SHOWING RUBRAIL ATTACHMENT

2 ⊛ DENOTES RUBRAIL WOOD BLOCKS CUT TO FIT

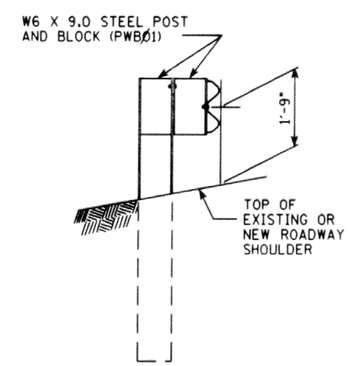

SECTION "B"-"B"

DETAILS GRA-32
ITEM NO.705-10.32
EACH

5 2 NOTE: THE LUMP SUM UNIT PRICE SHALL INCLUDE THE COST OF ALL GUARDRAIL HARDWARE, ADJUSTMENT TO THE EXISTING GUARDRAIL, ADDING RAIL PIECES, POSTS, DRILLING, ANCHORS, BLOCKOUTS, LABOR AND ANY MISCELLANEOUS MATERIALS NECESSARY TO INSTALL THE PROTECTIVE GUARDRAIL TO THE EXISTING PIER PROTECTION AS SHOWN ON THIS SHEET AND STANDARD DRAWINGS SBR-2-131 AND SBR-2-132 (FROM WALL CONNECTION TO STANDARD GUARDRAIL). ITEM NO.705-10.32, GUARDRAIL ATTACHMENT TO EXISTING BRIDGE PIER PROTECTION, EACH.

NOTE: ½" X 0'-6" X 0'-8" SHIM PLATES TO BE PAINTED WITH ALUMINUM EPOXY PAINT THAT CAN BE SUPPLIED BY A PAINT COMPANY THAT IS CURRENTLY IN THE TENNESSEE DEPARTMENT OF TRANSPORTATION QUALIFIED PRODUCTS LIST FOR PAINT.

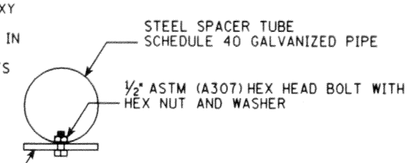

½" X 0'-6" X 0'-8" SHIM PLATES MAY BE REQUIRED IN ORDER TO OBTAIN A SNUG FIT OF THE PIPE MAXIMUM PLATE THICKNESS SHALL BE IN ½" INCREMENTS.

DETAIL "A"

NOTE: CONTRACTOR TO VERIFY FIELD CONDITIONS PRIOR TO BIDDING TO DETERMINE WHAT SIZE SHIM AND PIPE WILL BE REQUIRED.

2 NOTE: FOR ADDITIONAL DETAILS AND NOTES NOT SHOWN ON THIS SHEET, SEE STANDARD DRAWINGS SBR-2-131, SBR-2-132, SBR-2-133, AND SBR-2-134.

NOTE: 1" DIA. THROUGH HOLES FOR 7/8" DIA. HEX HEAD BOLTS AND 6" DEEP X 7/8" DIA. HOLES FOR 5/8" DIA. EPOXY GROUTED A307 BOLTS TO BE DRILLED WITH A HIGH SPEED DRILL. THE DRILL BIT SHALL BE CAPABLE OF DRILLING THROUGH EXISTING REINFORCING BARS AND CONCRETE. COST OF DRILLING TO BE INCLUDED IN ITEMS BID ON. A LIST OF APPROVED EPOXY GROUTS MAY BE OBTAINED FROM THE TENNESSEE DEPARTMENT OF TRANSPORTATION, DIVISION OF MATERIALS AND TEST.

SPECIAL NOTE: PORTIONS OF THE RAIL SECTIONS AS SHOWN ON THESE ATTACHMENT DETAILS MAY NOT BE STANDARD LENGTHS. IF IT BECOMES NECESSARY FOR THE CONTRACTOR TO CUT SECTIONS OF THE RAILS FROM STOCK LENGTHS IN ORDER TO CONFORM TO DETAILS AS SHOWN ON THESE SHEETS, THE CONTRACTOR WILL NOT RECEIVE ANY EXTRA COMPENSATION FOR CUTTING OF RAIL SECTIONS.

STATE OF TENNESSEE
DEPARTMENT OF TRANSPORTATION

GUARDRAIL ATTACHMENT TO EXISTING PIER PROTECTION 1991

B/R MINOR REVISION - FHWA APPROVAL NOT REQUIRED

DESIGNED BY	R.M.D. & T.C.	DATE	9-91
DRAWN BY	K.L.FRANKENFIELD	DATE	9-91
SUPERVISED BY	W.M.M. & R.M.D.	DATE	9-91
CHECKED BY	McINTURFF	DATE	9-91

2 3 6 4 SBR-2-135