6 GENERAL NOTES:

SPECIFICATIONS: STANDARD ROAD AND BRIDGE SPECIFICATIONS OF THE TENNESSEE DEPARTMENT OF TRANSPORTATION (CURRENT EDITION).

CONCRETE: SHALL BE CLASS 'A' FC-3,000 P.S.I. SEE STANDARD SPECIFICATIONS.

DESIGN SPECIFICATION: AASHTO (CURRENT EDITION) WITH ADDENDA.

DETAILS OF THE GUARDRAIL: SHALL CONFORM TO STANDARD DRAWING S-GR-SERIES, EXCEPT FOR DETAILS SHOWN ON THIS SHEET.

PROFILE OF GUARDRAIL AND PARAPET: SHALL CONFORM TO ROADWAY GRADE.

REINFORCING STEEL: SEE STANDARD SPECIFICATIONS.

3 FINISHING CONCRETE SURFACES: A CLASS I FINISH FOLLOWED BY AN APPLIED TEXTURE FINISH SHALL BE USED IN LIEU OF A CLASS II FINISH. SEE STANDARD SPECIFICATIONS. THE COLOR OF THE FINISH SHALL BE SIMILAR TO WHITE, FEDERAL SPECIFICATION NO. 37886, FEDERAL COLOR NO. 595a, AND A COLOR SAMPLE SHALL BE SUBMITTED TO THE ENGINEER FOR APPROVAL. PAYMENT FOR THE APPLIED TEXTURE FINISH SHALL BE UNDER ITEM NO. 705-10.28.

2 GRAVEL BASE: FOR COMPACTED GRAVEL BASE SEE SECTION 903.05 OF THE STANDARD SPECIFICATIONS. THE AGGREGATE SHALL CONFORM TO SIZE 68, 7 OR 8.

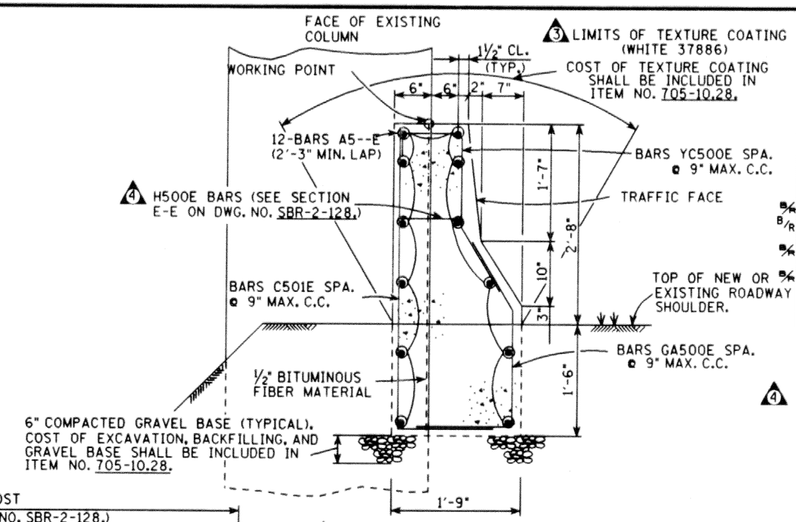

3 LIMITS OF TEXTURE COATING (WHITE 37886) COST OF TEXTURE COATING SHALL BE INCLUDED IN ITEM NO. 705-10.28.

4 NOTE: FOR DETAILS OF BAR BENDS SEE DWG. NO. SBR-2-128.

1 DETAIL A - A

PROJECT NO.	YEAR	SHEET NO.
	1988	

REVISIONS

NO.	DATE	BY	BRIEF DESCRIPTION
1	8-30-88	WMM	REVISED H-BARS LOCATIONS.
2	5-26-89	WMM	REVISED ENDPOST AND MISC. NOTES.
3	11-15-90	WMM	REVISED TEXTURE COATING AND NOTES.
4	11-16-92	WMM	REVISED DRAWING NUMBERS.
5	12-2-94	TO	REVISED DRAWING NUMBERS.
6	2-24-95	TO	REVISED GENERAL NOTES, NOTES & REMOVED SIGNATURES
7	1-4-96	TO	REVISED BR DRAWING NO. TO SBR DRAWING NO.
8	11-05-01	WS	REVISED ITEM NO'S.

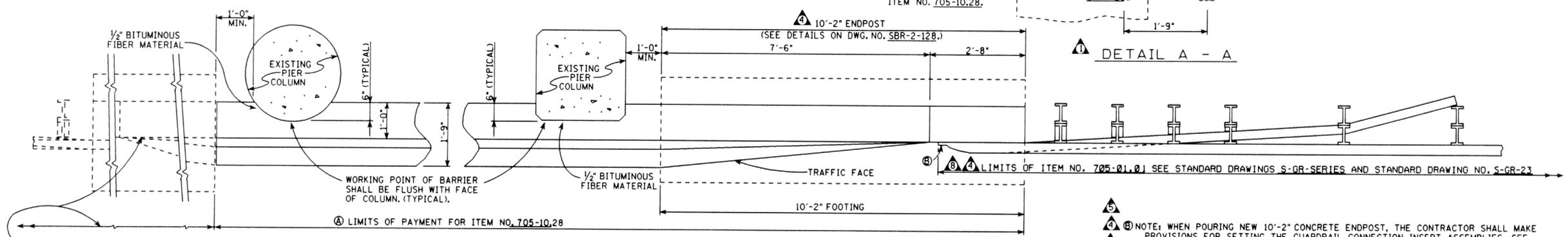

4 A NOTE: TERMINATION OF BARRIER WALL FOR PAYMENT LENGTH SHALL BE SHOWN ON ROADWAY PLANS. WHEN TWO (2) WAY TRAFFIC IS PRESENT THE EXIT END SHALL BE FORMED WITH A 10'-2" ENDPOST/FOOTING, SEE ENTRANCE END THIS SHEET AND DWG. NO. SBR-2-128 FOR DETAILS.

1 PLAN

5 4 3 6 B NOTE: WHEN POURING NEW 10'-2" CONCRETE ENDPOST, THE CONTRACTOR SHALL MAKE PROVISIONS FOR SETTING THE GUARDRAIL CONNECTION INSERT ASSEMBLIES. SEE GUARDRAIL ATTACHMENT AND INSERT ASSEMBLY DETAILS ON STANDARD DWG. NO.'S STD-1-1 AND S-GR-23 . COST OF GUARDRAIL ATTACHMENT INSERT ASSEMBLIES SHALL BE INCLUDED IN ITEM NO. 705-10.28. CONCRETE BARRIER WALL FOR BRIDGE PIERS, LIN. FT.

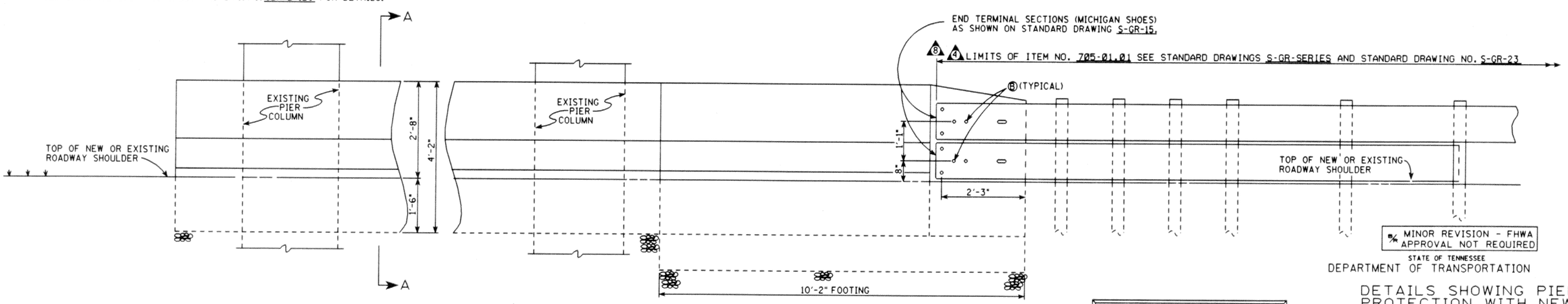

2 ELEVATION
(SHOWING CONCRETE BARRIER WALL WITH 10'-2" TAPERED ENDPOST)

DETAILS GRA-28
ITEM NO. 705-10.28
LINEAR FOOT

% MINOR REVISION - FHWA APPROVAL NOT REQUIRED

STATE OF TENNESSEE
DEPARTMENT OF TRANSPORTATION

DETAILS SHOWING PIER PROTECTION WITH NEW CONCRETE BARRIER WALL
1988

DESIGNED BY		DATE	-
DRAWN BY	GEORGE KORNIKOSKI	DATE	08-92
SUPERVISED BY	GENTRY & McINTURFF	DATE	08-92
CHECKED BY	McINTURFF	DATE	-

6 4 7 SBR-2-127