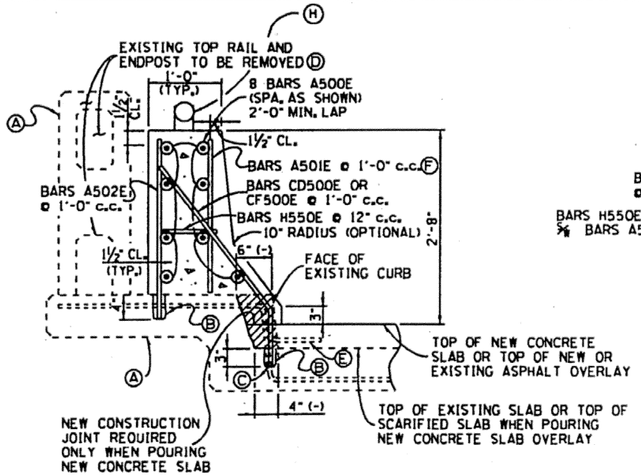

DETAIL 'A'
(SHOWING EXISTING SAFETY CURB)

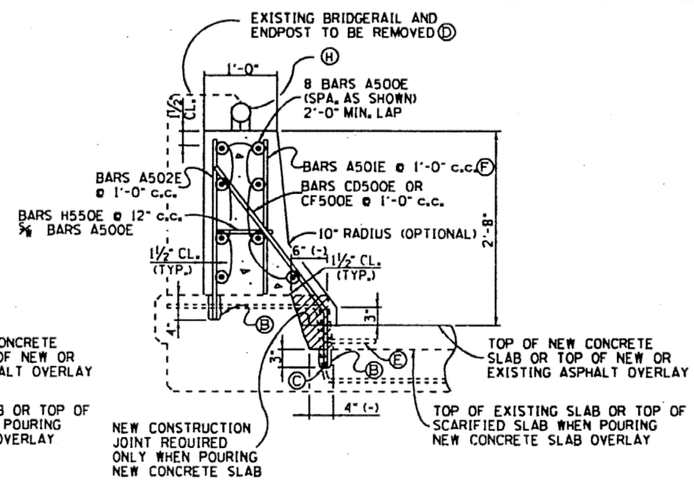

DETAIL 'C'
(SHOWING EXISTING BUFFER CURB)

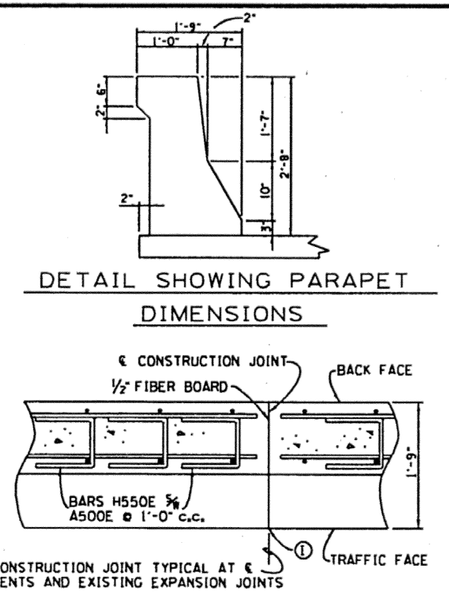

DETAIL SHOWING PARAPET DIMENSIONS

SECTION W - W

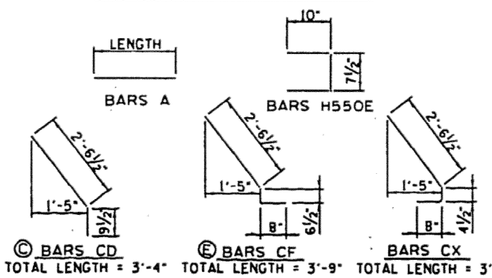

Ⓒ BARS CD — TOTAL LENGTH = 3'-4"
Ⓔ BARS CF — TOTAL LENGTH = 3'-9"
BARS CX — TOTAL LENGTH = 3'-7"

Ⓒ BARS 'CD' ARE TO BE USED WHEN PLACING NEW CONCRETE PARAPET ACROSS BRIDGE WITH EXISTING OR NEW ASPHALT OVERLAY.

Ⓔ BARS 'CF' MAY BE SUBSTITUTED FOR BARS 'CD' ONLY WHEN PLACING NEW CONCRETE PARAPET ACROSS BRIDGE WITH NEW 4½" CONCRETE SLAB OVERLAY.

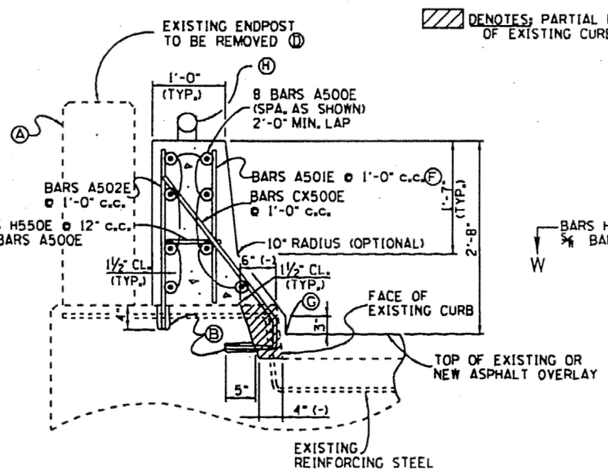

DETAIL 'B'
(SHOWING CONCRETE PARAPET DETAILS NEAR END OF BRIDGE IN ENDWALL AREA)

DENOTES: PARTIAL REMOVAL OF EXISTING CURB (TYP.)

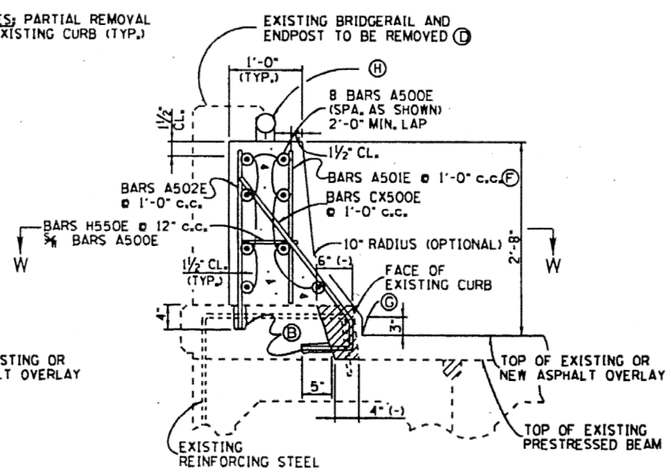

DETAIL 'D'
(SHOWING CONCRETE PARAPET DETAILS FOR BRIDGES WITH SIDE BY SIDE PRESTRESSED BOX BEAMS OR CHANNELS)

PROJECT NO.	YEAR	SHEET NO.
	1988	

REVISIONS

	NO.	DATE	BY	BRIEF DESCRIPTION
	1	8-30-89	WMM	REVISED H550E BARS LOCATION & NOTE
	2	3-26-89	WMM	REVISED NOTES & ITEM NUMBER
	3	11-15-90	WMM	REVISED TEXTURE COATING DETAIL, ESTIMATED QUANTITIES & NOTES
	4	11-16-92	WMM	REVISED DRAWING NOS. & NOTES
⅝/R	5	12-2-94	TO	REVISED NOTE 1, SECTION 9-8 AND REVISED DRAWING NUMBER
B/R	6	3-1-95	TO	REVISED GENERAL NOTES. REMOVED SIGNATURE AND ADDED DETAIL OF PARAPET DELINEATOR
B/R	7	1-4-96	TO	REVISED BR DRAWING NO. TO SBR DRAWING NO. AND REVISED STD-2-1 TO STD-1-1

GENERAL NOTES

SPECIFICATIONS: STANDARD ROAD AND BRIDGE SPECIFICATIONS OF THE TENNESSEE DEPARTMENT OF TRANSPORTATION. (CURRENT EDITION)

DESIGN SPECIFICATIONS: AASHTO (CURRENT EDITION) WITH ADDENDA.

CONCRETE: SHALL BE CLASS 'A' F'C = 3,000 P.S.I. SEE STANDARD SPECIFICATIONS - CONCRETE STRUCTURES.

REINFORCING STEEL: SEE STANDARD SPECIFICATIONS.

FINISHING CONCRETE SURFACES: A CLASS I FINISH FOLLOWED BY AN APPLIED TEXTURE FINISH SHALL BE USED IN LIEU OF A CLASS II FINISH. SEE STANDARD SPECIFICATIONS. THE COLOR OF THE FINISH SHALL BE AS SHOWN IN TEXTURE COATING DETAIL THIS SHEET. FEDERAL COLOR STANDARD NO. 595A AND A COLOR SAMPLE SHALL BE SUBMITTED TO THE ENGINEER FOR APPROVAL. NO TEXTURE FINISH SHALL BE APPLIED PRIOR TO COMPLETION OF PAVING AND HAULING OPERATIONS AT THE BRIDGE SITE.

NOTE: WHEN REMOVING PORTIONS OF THE EXISTING CONCRETE CURBING CARE SHALL BE TAKEN SO AS NOT TO DAMAGE THE EXISTING REINFORCING STEEL. ALL EXISTING REINFORCING STEEL IN THESE AREAS ARE TO REMAIN IN PLACE AND SHALL BE COMPLETELY CLEANED TO THE FULL SATISFACTION OF THE ENGINEER BEFORE REPOURING THE NEW CONCRETE PARAPET.

NOTE: PROFILE OF CONCRETE PARAPET AND ENDPOST SHALL CONFORM TO ROADWAY GRADE.

NOTE: DETAILS OF GUARDRAIL SHALL CONFORM TO STANDARD DRAWING S-GR-SERIES. EXCEPT FOR DETAILS SHOWN ON THIS SHEET.

Ⓔ SPECIAL NOTE TO CONTRACTOR WHEN POURING NEW SLAB: THE CONTRACTOR SHALL POUR THE NEW CONCRETE SLAB TO THE CURB REMOVAL LINE BEFORE POURING NEW PARAPET. BARS CF500E SHALL BE LEFT PROJECTING OUT OF THE NEW SLAB.

NOTE: TOPS OF EXISTING CURBS AND EXISTING EXPOSED REINFORCING STEEL SHALL BE BLAST CLEANED BEFORE POURING THE NEW CONCRETE PARAPETS. COSTS OF BLAST CLEANING SHALL BE INCLUDED IN ITEM NO. 620-10.01.

Ⓘ NOTE: CONTRACTOR TO POUR NEW CONCRETE JERSEY SHAPE PARAPETS WITH CONSTRUCTION JOINTS AT ℄ OF ALL BENTS AND EXISTING EXPANSION JOINTS IN THE EXISTING BRIDGE. COST OF ALL MATERIALS NECESSARY FOR PLACING THE CONSTRUCTION JOINTS AT DESIGNATED LOCATIONS SHALL BE INCLUDED IN ITEM NO. 620-10.01.

NOTE: BRIDGES WITH CURB WIDTHS LESS THAN 3'-3" SHALL HAVE EXISTING BRIDGERAIL COMPLETELY REMOVED. BRIDGES WITH CURB WIDTHS 3'-3" OR WIDER SHALL HAVE ONLY THE TOP RAIL AND RAIL POST REMOVED. REINFORCING BARS IN THE POST SHALL BE CUT OFF FLUSH WITH THE TOP OF THE EXISTING CURBS. THE AREA OF POST REMOVAL SHALL BE REPOURED TO TOP OF THE BOTTOM RAIL. SEE DETAIL 'X' ABOVE. COST OF REMOVING OLD RAILS AND REPOURING SECTIONS OF BOTTOM RAIL SHALL BE PAID UNDER ITEM NO. 620-10.01.

NOTE: COST OF EXISTING CONCRETE CURB REMOVAL, NEW CLASS 'A' CONCRETE, NEW EPOXY COATED REINFORCING STEEL, FORMING, EXISTING BRIDGERAIL REMOVAL, BLASTCLEANING, DRILLING, CONCRETE GROUTS, TEXTURED COATING, EXCAVATION, BACKFILLING, LABOR AND ALL MISCELLANEOUS MATERIALS NECESSARY TO BUILD THE NEW CONCRETE PARAPET WITH NEW 10'-2" CONCRETE ENDPOST AT BRIDGE ENDS SHALL BE INCLUDED IN ITEM NO. 620-10.01.

Ⓐ NOTE: WHEN PLACING NEW CONCRETE PARAPET RAIL ACROSS BRIDGES WITH EXISTING SIDEWALKS, THE EXISTING BRIDGERAIL SHALL REMAIN IN PLACE.
THE CONTRACTOR SHALL BE RESPONSIBLE FOR SUPPORTING THE EXISTING SIDEWALK CURB CANTILEVER WHEN POURING THE NEW JERSEY SHAPE CONCRETE PARAPET. COST OF SIDEWALK CURB SUPPORTS SHALL BE INCLUDED IN ITEM NO. 620-10.01.

Ⓑ DENOTES: NEW HOLES FOR GROUTED BARS SHALL BE DRILLED WITH A HIGH SPEED DRILL. THE DRILL BIT SHALL BE CAPABLE OF DRILLING THROUGH EXISTING REINFORCING BARS AND CONCRETE. THE DIAMETER OF THE HOLES SHALL BE ¼" (+) LARGER THAN THE DIAMETER OF THE REINFORCING BARS. THE HOLES SHALL BE THOROUGHLY CLEANED BY METHODS APPROVED BY THE ENGINEER. AFTER CLEANING OUT THE HOLES, PACK WITH AN APPROVED GROUT AND DRIVE THE REINFORCING BAR TO ITS SEAT. A LIST OF APPROVED GROUTS MAY BE OBTAINED FROM THE DEPARTMENT OF TRANSPORTATION, DIVISION OF MATERIALS AND TESTS.

Ⓓ NOTE: AFTER REMOVING PORTIONS OF THE EXISTING BRIDGERAIL AND ENDPOST, AND WHEN POURING THE NEW CONCRETE PARAPET THERE MAY BE AREAS ON TOP OF THE EXISTING CURBS OR WINGWALLS WHERE REINFORCING BARS AND/OR ANCHOR BOLTS MAY BE EXPOSED. IN THESE AREAS THE BARS AND/OR ANCHOR BOLTS SHALL BE CUT 1¼" MIN. BELOW THE EXISTING CONCRETE SURFACES, AND THE VOID FILLED WITH AN EPOXY SEALER. ALL WORK MUST MEET WITH THE APPROVAL OF THE ENGINEER. COST SHALL BE INCLUDED IN ITEM NO. 620-10.01.

Ⓕ NOTE: BARS A501E IN THE TRAFFIC FACE OF THE PARAPET TO REST ON TOP OF THE EXISTING CURB AND CLEAR THE TOP OF THE NEW POURED PARAPET 1½" ±.

Ⓖ DENOTES: COST OF REMOVING ANY PORTIONS OF EXISTING ASPHALT AND REPLACING OF SAME SHALL BE INCLUDED IN COST OF ITEMS BID ON.

Ⓗ NOTE: FOR PARAPET DELINEATOR DETAILS AND SPACING, SEE STANDARD DRAWING STD-1-1.

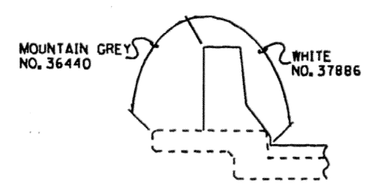

TEXTURE COATING DETAIL
(SHOWING LIMITS OF TEXTURE COATING FEDERAL SPECIFICATION NO.'S)

(COST OF TEXTURE COATING SHALL BE INCLUDED IN ITEM NO. 620-10.01, AND INCLUDES 10'-2" ENDPOST AS SHOWN ON DRAWING NO. SBR-2-125.)

ESTIMATED QUANTITIES - PER FOOT

ITEM	CLASS 'A' CONCRETE C.Y.	EPOXY COATED REINFORCING STEEL LB.	TEXTURED COATED FINISH (NEW) S.Y.
DETAILS 'A' & 'B'	0.12	19.6	1.05
DETAILS 'C' & 'D'	0.12	19.6	0.75

NOTE: ESTIMATED QUANTITIES PER FOOT ARE FOR DETAILS 'A' THRU 'D' FROM BEGINNING TO END OF EXISTING BRIDGE. THE ESTIMATED QUANTITIES FOR THE 10'-2" ENDPOST AT BRIDGE ENDS ARE SHOWN ON DWG. NO. SBR-2-125, AND SHALL BE INCLUDED IN ITEM NO. 620-10.01, CONCRETE PARAPET (BRIDGERAIL REPLACEMENT), LIN. FT.

⅝ MINOR REVISION - FHWA APPROVAL NOT REQUIRED

STATE OF TENNESSEE
DEPARTMENT OF TRANSPORTATION

DETAILS SHOWING REPLACEMENT OF EXISTING BRIDGERAIL SYSTEM WITH NEW JERSEY SHAPE CONCRETE PARAPET AND NEW 10'-2" ENDPOST
1988

SBR-2-124

DESIGNED BY _____ DATE _____
DRAWN BY SIM FRANKENFIELD DATE 9-92
SUPERVISED BY GENTRY & McINTURFF DATE 9-92
CHECKED BY McINTURFF DATE 9-92

WITH DRAWINGS SBR-2-125 & SBR-2-126