③ ② ① GENERAL NOTES

APPLICABLE TO STRIP SEAL EXPANSION JOINT REPLACEMENT DETAILS AS SHOWN ON DRAWINGS SBR-2-116 THRU SBR-2-121.

1) SPECIFICATIONS: STANDARD ROAD AND BRIDGE SPECIFICATIONS OF THE TENNESSEE DEPARTMENT OF TRANSPORTATION. (CURRENT EDITION).

2) DESIGN SPECIFICATIONS: AASHTO CURRENT EDITION WITH ADDENDA.

3) SPECIAL PROVISIONS: SEE SPECIAL PROVISOIN NO. 604S REGARDING STRIP SEAL EXPANSION JOINTS.

4) HIGH EARLY STRENGTH CONCRETE MIX: THE MIX TO MEET THE REQUIREMENTS OF THE STANDARD SPECIFICATIONS, CLASS "A", EXCEPT THE CEMENT CONTENT SHALL BE A MINIMUM OF 714 LBS., THE WATER CEMENT RATIO SHALL BE A MAXIMUM OF 0.40, NO FLY ASH REPLACEMENT WILL BE PERMITTED, AND THE MINIMUM 28 DAY COMPRESSIVE STRENGTH SHALL BE 3,500 p.s.i. TRAFFIC SHALL NOT BE PERMITTED ON ANY OF THE REPAIR AREAS UNTIL TEST SPECIMENS ATTAIN A COMPRESSIVE STRENGTH OF 3,000 p.s.i. MINIMUM AND THE CONCRETE HAS BEEN IN PLACE A MINIMUM OF TEN (10) DAYS. ALL CONCRETE IN REPAIR AREAS, SHALL BE CURED ACCORDING TO SECTION 604 OF THE STANDARD SPECIFICATIONS.

5) REINFORCING STEEL: SEE STANDARD SPECIFICATIONS. THE CONTRACTOR SHALL DETERMINE THE AMOUNT OF REINFORCING STEEL AND PROVIDE SUCH TO COMPLY WITH THE JOINT REPLACEMENT DETAILS AS SHOWN ON THESE PLANS.

6) WELDING: ALL WELDING SHALL SHALL BE DONE BY AWS CERTIFIED WELDERS ONLY. SEE STANDARD SPECIFICATIONS NO. 602.

7) BRIDGE DECK CROSS-SLOPE AND GRADE: EXPANSION JOINTS SHALL BE FABRICATED TO MATCH THE CROSS-SLOPE, SKEW AND GRADE OF THE EXISTING BRIDGE DECK OR NEW OVERLAY.

8) FIELD VERIFICATIONS: THE CONTRACTOR IS RESPONSIBLE FOR FIELD VERIFICATION OF ALL MEASUREMENTS AND DIMENSIONS IN ORDER TO FABRICATE THE EXPANSION DEVICES. SHOP DRAWINGS SHALL BE SUBMITTED TO THE HEADQUARTERS, BRIDGE INSPECTION AND REPAIR OFFICE FOR REVIEW BEFORE FABRICATION BEGINS. A COPY OF THE LETTER TRANSMITTING THE SHOP DRAWINGS TO THE HEADQUARTERS, BRIDGE INSPECTION AND REPAIR OFFICE SHALL BE FURNISHED TO THE PROJECT ENGINEER. SHOP DRAWING SUBMITTAL SHALL BE IN ACCORDANCE WITH SPECIAL PROVISION NO. 105A. THE EXPANSION JOINTS SHALL BE CONSTRUCTED IN ACCORDANCE WITH THE DETAILS SHOWN ON THE SHOP DRAWINGS.

9) TRAFFIC CONTROL: THE STEEL PORTION OF THE EXPANSION DEVICES SHALL BE FABRICATED IN SECTIONS IN ORDER TO MAINTAIN TRAFFIC. ONLY ONE (1) TRAFFIC LANE MAY BE CLOSED UNLESS OTHERWISE SHOWN ON THE CONTRACT PLANS. THE SECTIONS ARE TO BE CONNECTED WITH FULL PENETRATION WELDS.

10) BLAST CLEANING AND PAINTING: ALL OF THE EXPOSED STEEL SURFACES SHALL BE PAINTED WITH SYSTEM "A" PAINT SYSTEM. COLOR OF THE URETHANE FINISH COAT SHALL COMPLY WITH FEDERAL STANDARD NO. 595a, 24110 BRIGHT GREEN. SEE SECTIONS 603 AND 910 OF THE STANDARD SPECIFICATIONS FOR ROAD AND BRIDGE CONSTRUCTION OF THE TENNESSEE DEPARTMENT OF TRANSPORTATION. COST OF PAINTING SHALL BE INCLUDED IN THE UNIT PRICE BID FOR EXPANSION JOINT REPAIR.

11) NOTE: ALL NEW EXPANSION JOINTS SHALL BE INSTALLED UP THE FULL HEIGHT OF THE INSIDE FACE OF THE EXISTING SIDEWALKS OR CURBS. ALL NEW EXPANSION JOINTS, WHEN PLACED IN CONJUNCTION WITH THE NEW CONCRETE PARAPETS OR EXISTING CONCRETE PARAPETS, SHALL BE PLACED UP THE FACE OF THE PARAPETS AS SHOWN IN DETAILS ON THESE DRAWINGS. ANY NECESSARY CONCRETE REMOVAL AND REPOURING IN THE CURB, SIDEWALK OR EXISTING CONCRETE PARAPET, AND ANY NEW REINFORCING STEEL REQUIRED SHALL BE INCLUDED IN THE UNIT PRICE BID FOR EXPANSION JOINT REPAIR. ALL VERTICAL PORTIONS OF THE NEW EXPANSION JOINTS SHALL BE ANCHORED INTO THE CONCRETE CURBS, SIDEWALKS, OR PARAPETS AS SHOWN IN THESE PLANS. THE USE OF DRILLED GROUTED, OR DRILLED AND MECHANICAL INSERTS FOR THE ANCHORING OF THE VERTICAL PORTIONS OF THE EXPANSION JOINTS IS PROHIBITED.

12) NOTE: ALL CONCRETE POURS SHALL BE WELL CONSOLIDATED BEHIND AND AROUND THE EXPANSION JOINT STEEL RETAINERS.

13) NOTE: ALL EXISTING JOINT OPENINGS SHALL BE THOROUGHLY CLEANED OF FOREIGN MATERIAL AND EXISTING JOINT MATERIAL BEFORE PLACING THE NEW EXPANSION JOINTS.

14) NOTE: THE COST OF ALL MODIFICATIONS OF THE EXISTING BRIDGE DETAILS NECESSARY TO PROPERLY INSTALL THE EXPANSION JOINT SHALL BE INCLUDED IN THE PRICE BID FOR THE JOINT.

15) NOTE: COST OF EXISTING CONCRETE REMOVAL IN THE EXPANSION JOINT REPAIR AREAS, NEW HIGH EARLY STRENGTH CONCRETE, EPOXY COATED REINFORCING STEEL, FORMING, AND ALL MISCELLANEOUS MATERIALS AND LABOR NECESSARY TO INSTALL THE NEW EXPANSION JOINT SYSTEM COMPLETE AND IN PLACE TO BE PAID FOR IN THE PRICE BID FOR EXPANSION JOINT.

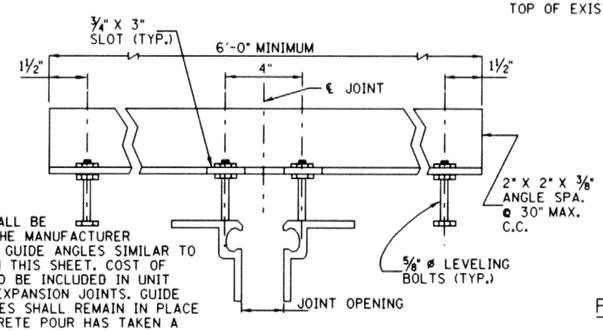

NOTE: JOINTS SHALL BE SHIPPED FROM THE MANUFACTURER WITH ALIGNMENT GUIDE ANGLES SIMILAR TO THOSE SHOWN ON THIS SHEET. COST OF GUIDE ANGLES TO BE INCLUDED IN UNIT PRICE BID FOR EXPANSION JOINTS. GUIDE ALIGNMENT ANGLES SHALL REMAIN IN PLACE UNTIL THE CONCRETE POUR HAS TAKEN A PERMANENT SET.

DETAIL SHOWING TEMPORARY ② ALIGNMENT GUIDE ANGLES

(SPACING NOT TO EXCEED 30")

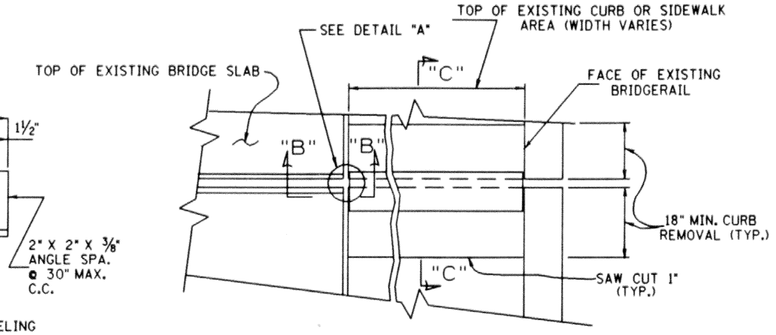

PLAN OF EXISTING CURB OR SIDEWALK

(SHOWING NEW STEEL COVER PLATE)

PROJECT NO.	YEAR	SHEET NO.
	1991	

REVISIONS

NO.	DATE	BY	BRIEF DESCRIPTION
1	7-29-92	WMM	REVISED CONCRETE NOTE & ADDED CONCRETE MIX & COST NOTE
2	12-2-94	TQ	ADDED DETAIL FROM DWG. BR-2-116 (GUIDE ANGLES) & MOVED NOTES
3	3-4-95	TQ	REVISED GENERAL NOTES AND REMOVED SIGNATURES
4	1-4-96	TQ	REVISED BR DRAWING NO. TO SBR DRAWING NO.

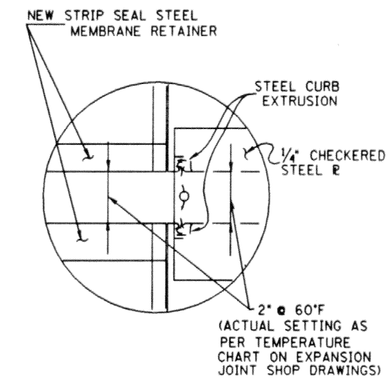

DETAIL "A"

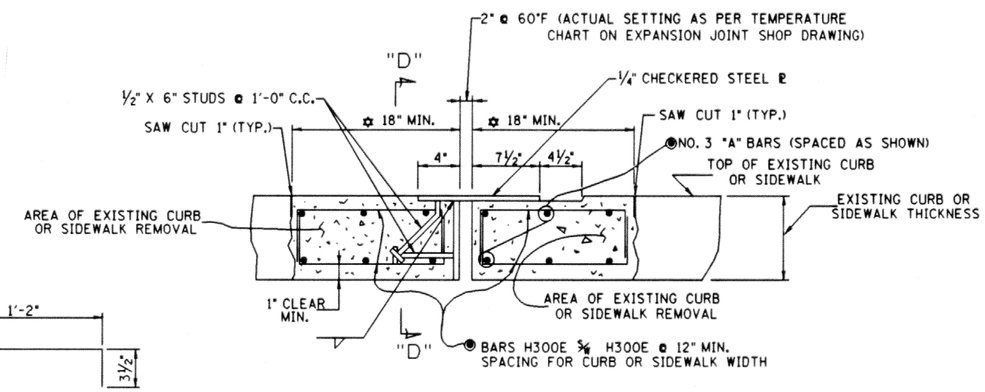

SECTION "C-C"

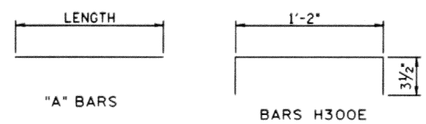

NOTE: COST OF NEW CURB OR SIDEWALK COVER PLATES COMPLETE AND IN PLACE TO BE INCLUDED IN NEW STRIP SEAL EXPANSION JOINT ITEMS BID ON.

✡ NOTE: EXTREME CARE SHALL BE TAKEN WHEN REMOVING EXISTING CONCRETE IN THE CURB OR SIDEWALK AREA SO AS NOT TO DAMAGE THE EXISTING REINFORCING STEEL. ALL EXISTING REINFORCING STEEL SHALL BE COMPLETELY CLEANED BEFORE POURING NEW CONCRETE. SEE CONCRETE NOTES THIS SHEET. SEE SECTION C-C SHOWING NEW REINFORCING STEEL.

● NOTE: COST OF ALL NEW REINFORCING STEEL IN THE CURB OR SIDEWALK AREA TO BE INCLUDED IN ITEM BID ON.

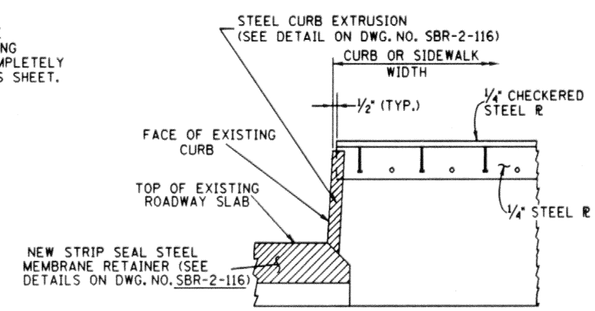

SECTION "B-B"

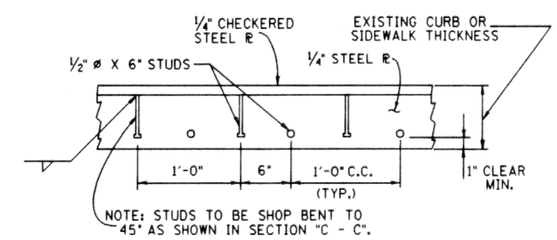

SECTION "D-D"

(SHOWING STUD SPACING)

MINOR REVISION - FHWA APPROVAL NOT REQUIRED

STATE OF TENNESSEE
DEPARTMENT OF TRANSPORTATION

GENERAL NOTES AND DETAILS FOR EXPANSION JOINT REPLACEMENT CONSTRUCTION TYPES "A" THRU "J"
1991

DETAILS SHOWING NEW CURB OR SIDEWALK COVER PLATE ASSEMBLIES AT LOCATIONS OF NEW STRIP SEAL EXPANSION JOINTS

DESIGNED BY		DATE	
DRAWN BY	E. JOHNSON (REPO)	DATE	9-89
SUPERVISED BY	GENTRY & McINTURFF	DATE	9-89
CHECKED BY	McINTURFF & GLASGOW	DATE	7-90

④ SBR-2-115