STD154.DGN

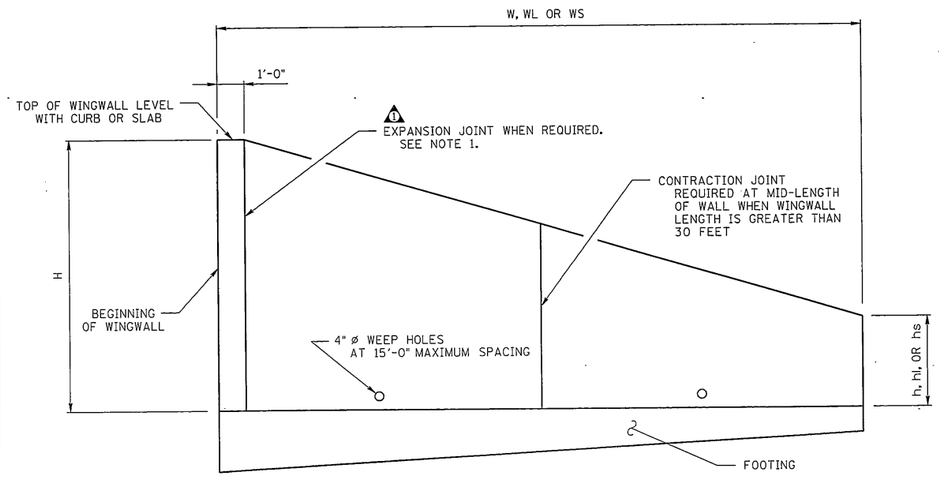

NOTE: SEE TABLES ON STANDARD DRAWINGS STD-15-10 THRU 11 FOR WINGWALL DIMENSIONS

W = WINGWALL LENGTH FOR 90° SKEW
WL = LENGTH OF LONG WINGWALL FOR SKEWS OTHER THAN 90°
WS = LENGTH OF SHORT WINGWALL FOR SKEWS OTHER THAN 90°
H = HEIGHT AT BEGINNING OF WINGWALL
h = MIN. HEIGHT OF END OF WINGWALL FOR 90° SKEW
hl = MIN. HEIGHT OF END OF LONG WINGWALL FOR SKEWS OTHER THAN 90°
hs = MIN. HEIGHT OF END OF SHORT WINGWALL FOR SKEWS OTHER THAN 90°

ELEVATION VIEW OF WINGWALL

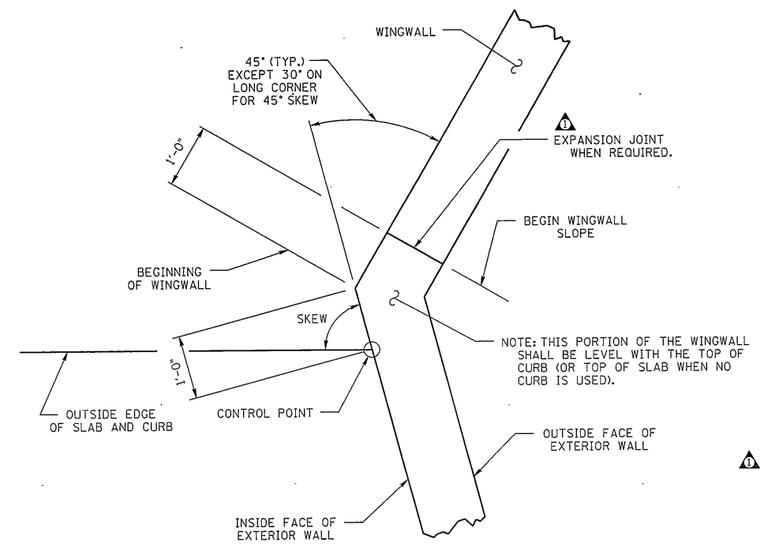

TYPICAL CORNER DETAIL

CONST. NO.

PROJECT NO.	YEAR	SHEET NO.
	2000	

REVISIONS

NO.	DATE	BY	BRIEF DESCRIPTION
1	2-28-03	JHW	GENERAL REVISIONS.

NOTES

1. WALL JOINTS - AN EXPANSION JOINT IS REQUIRED AT THE LOCATION SHOWN ON THIS DRAWING FOR ALL BOX BRIDGES, AND FOR SLAB BRIDGES WHENEVER THE WINGWALL LENGTH IS GREATER THAN 15 FEET. FOR WINGWALLS GREATER THAN 30 FEET, PLACE A CONTRACTION JOINT AT MID-LENGTH OF THE WALL.
   IF RUSTICATION GROOVES ARE USED, THE JOINTS SHALL BE SPACED TO CORRESPOND WITH RUSTICATIONS. WATERSTOPS SHALL MEET THE REQUIREMENTS OF SPECIFICATION ARTICLES 604.27 AND 918.11. JOINT MATERIAL SHALL MEET THE REQUIREMENTS OF SPECIFICATIONS SECTION 905. FOOTING AND FOOTING REINFORCEMENT SHALL BE CONTINUOUS.

2. WINGWALL DESIGN DATA:
   WEIGHT OF SOIL = 120 PCF
   ANGLE OF INTERNAL FRICTION = 29°
   SAFETY FACTOR FOR SLIDING = 1.5
   SAFETY FACTOR FOR OVERTURNING = 2.0
   COEFFICIENT OF FRICTION BETWEEN MASONRY AND SOIL = 0.45

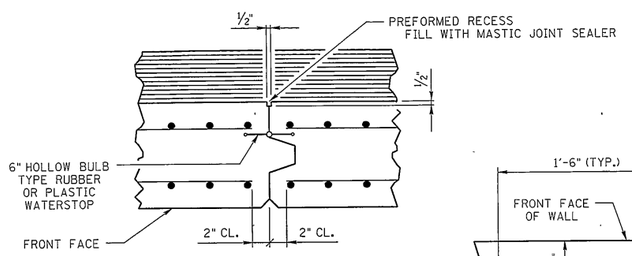

NOTE: STOP KEY 1'-0" BELOW TOP OF WALL

CONTRACTION JOINT

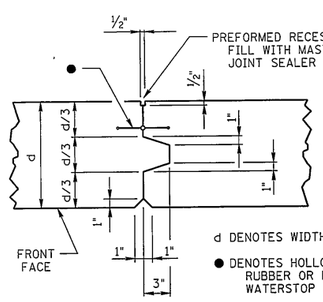

d DENOTES WIDTH OF WINGWALL

● DENOTES HOLLOW BULB TYPE RUBBER OR PLASTIC WATERSTOP

TYPICAL KEY DETAIL

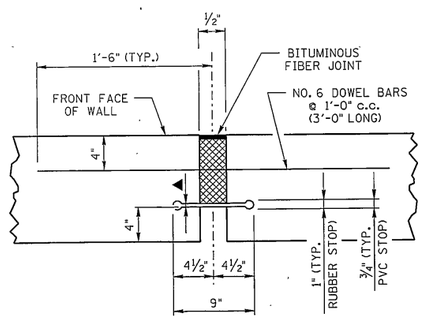

▲ DENOTES ⅜" THICKNESS FOR 9" HOLLOW BULB TYPE RUBBER OR PLASTIC WATERSTOP

EXPANSION JOINT DETAIL

THE EXPANSION JOINT SHALL BE USED IN THE WALL ONLY AND NOT CARRIED THROUGH THE FOOTING. NO REINFORCEMENT SHALL PASS THROUGH THE JOINT. ONE END OF THE DOWELS SHALL BE WRAPPED IN A LAYER OF TARPAPER WITH A TARPAPER CAP OVER THE END. THE COST OF THE BITUMUNOUS FIBER AND DOWEL SHALL BE INCLUDED IN THE UNIT PRICE BID FOR CLASS A CONCRETE.

WALL JOINT DETAILS

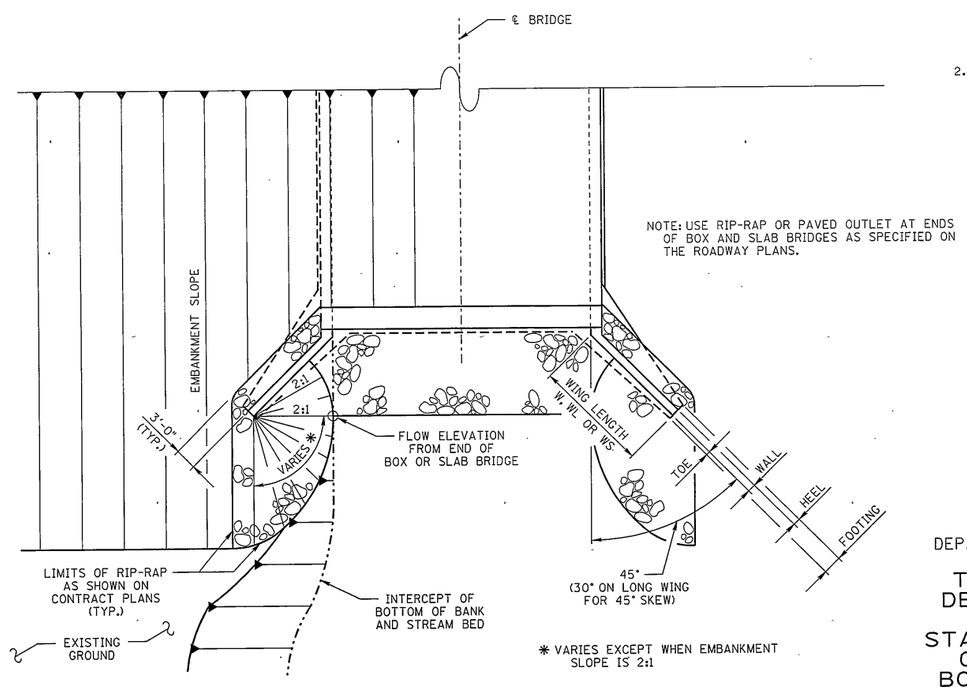

NOTE: USE RIP-RAP OR PAVED OUTLET AT ENDS OF BOX AND SLAB BRIDGES AS SPECIFIED ON THE ROADWAY PLANS.

* VARIES EXCEPT WHEN EMBANKMENT SLOPE IS 2:1

PLAN VIEW OF WINGWALLS

(90° SKEW SHOWN; OTHER SKEWS SIMILAR)

STATE OF TENNESSEE
DEPARTMENT OF TRANSPORTATION

TYPICAL WINGWALL DETAILS AND NOTES

STANDARD REINFORCED CONCRETE BRIDGE BOX AND SLAB TYPE

2000

CORRECT Edward P. Wasserman
ENGINEER OF STRUCTURES

STD-15-9

DESIGNED BY		DATE	
DRAWN BY	DIANE BUSH	DATE	12-99
SUPERVISED BY	RLH/JWP/MAH	DATE	12-99
CHECKED BY		DATE	

d:\dgn\std\std154.dgn
03-MAR-2003
08:46