STD153.DGN

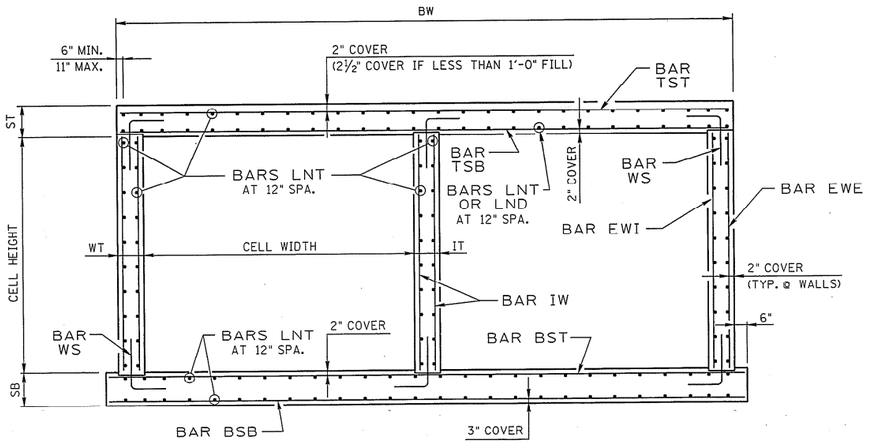

BOX BRIDGE

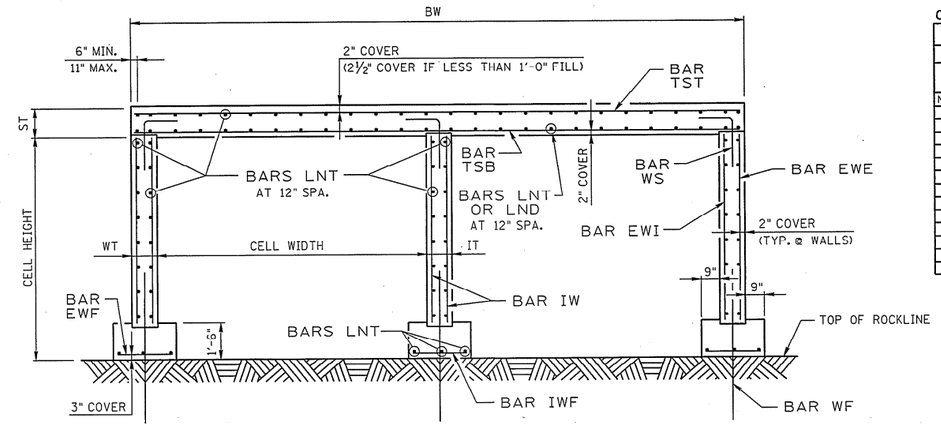

SLAB BRIDGE

TYPICAL SECTIONS

NOTE: TWO BARREL TYPICAL SECTIONS SHOWN.
SINGLE BARREL AND THREE BARREL ARE SIMILAR.

CONST. NO.		
PROJECT NO.	YEAR	SHEET NO.
	2000	

REVISIONS

NO.	DATE	BY	BRIEF DESCRIPTION
1	12-7-01	CMH	REVISED DETAIL AND NOTE

BOX DIMENSION DESIGNATIONS

THE BOX DIMENSION DESIGNATIONS IDENTIFY THE BOX ELEMENTS AS FOLLOWS:

SB = BOTTOM SLAB THICKNESS
ST = TOP SLAB THICKNESS
WT = EXTERIOR WALL THICKNESS
IT - INTERIOR WALL THICKNESS
BW = BOX WIDTH

REINFORCING BAR DESIGNATIONS

THE REINFORCING BAR DESIGNATIONS IDENTIFY THE LOCATION AND PLACEMENT OF THE BARS AS FOLLOWS:

TST = TOP SLAB, TOP FACE
TSB = TOP SLAB, BOTTOM FACE
BST = BOTTOM SLAB, TOP FACE
BSB = BOTTOM SLAB, BOTTOM FACE
EWE = EXTERIOR WALL, EXTERIOR FACE
EWI = EXTERIOR WALL, INTERIOR FACE
IW = INTERIOR WALL, BOTH FACES
LNT = LONGITUDINAL BAR
LND = LONGITUDINAL DISTRIBUTION BAR, TOP SLAB, BOTTOM FACE
WS = CONNECTOR, WALL TO SLAB
WF = CONNECTOR, WALL TO FOOTING
EWF= EXTERIOR WALL FOOTING
IWF = INTERIOR WALL FOOTING

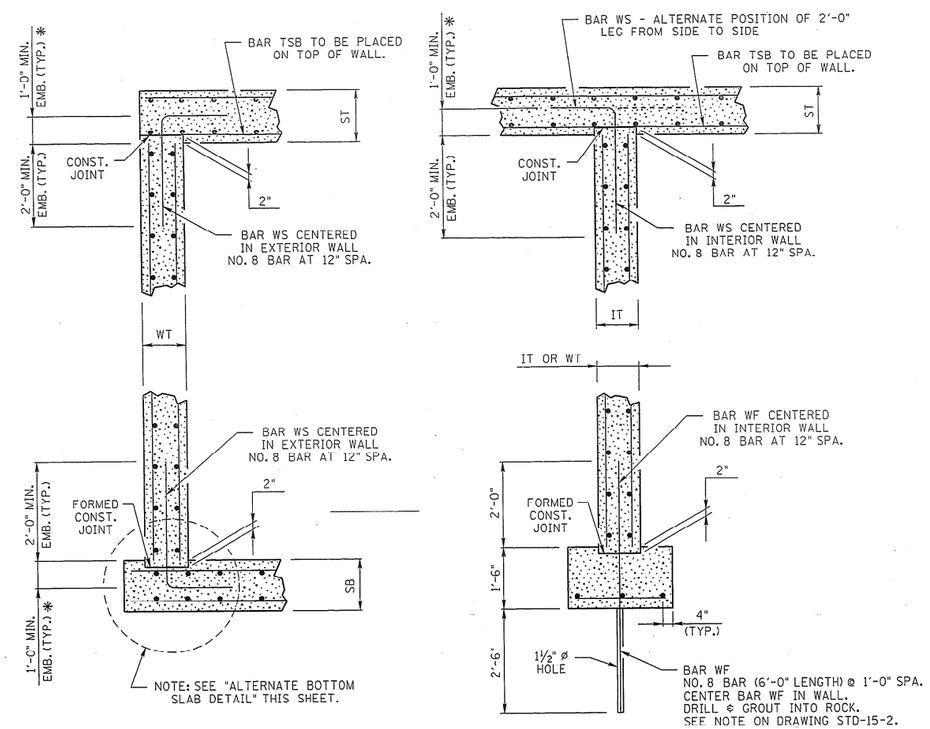

JOINT DETAIL FOR WALL TO SLAB OR FOOTING

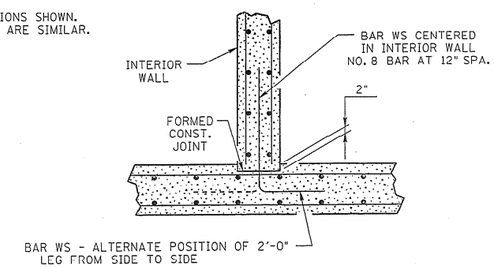

JOINT DETAIL FOR INTERIOR WALL TO BOTTOM SLAB

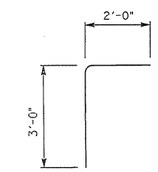

BAR WS

(NO. 8 BAR)

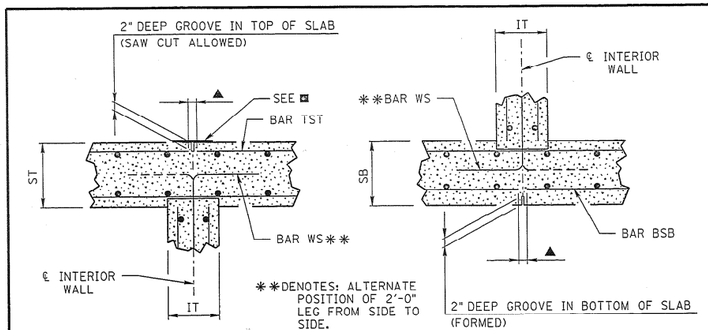

BOX OR SLAB BRIDGE

BOX BRIDGE

▲ BAR TST OR BAR BSB MUST BE DISCONTINUOUS (1" CLEARANCE) AT THE GROOVE. THE GROOVE SHALL ALIGN WITH CENTER OF INTERIOR WALL.

■ BUTYL RUBBER OR NEOPRENE STRIP 12 INCH WIDE BY ¼ INCH THICK SHALL COVER THE FULL LENGTH OF THE GROOVE IN THE TOP SLAB. STRIP MUST BE GLUED TO THE SLAB UTILIZING CONTACT CEMENT OVER 100% OF THE CONTACT AREA.

MOMENT BREAK DETAIL FOR MULTIPLE BARREL BOX & SLAB BRIDGES

(1) NOTE: MANDANTORY FOR FILL HEIGHTS GREATER THAN 10 FEET.

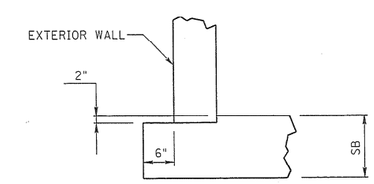

ALTERNATE BOTTOM SLAB DETAIL (1)

STATE OF TENNESSEE
DEPARTMENT OF TRANSPORTATION

TYPICAL SECTIONS AND DETAILS

STANDARD REINFORCED CONCRETE BRIDGE BOX AND SLAB TYPE

2000

CORRECT Edward P. Wasserman
ENGINEER OF STRUCTURES

STD-15-4

DESIGNED BY	CMH / MAH	DATE	12-99
DRAWN BY	DIANE BUSH	DATE	12-99
SUPERVISED BY	RLH/JWP/MAH	DATE	12-99
CHECKED BY		DATE	

* NOTE: THE EXCEPTION OCCURS WHEN TOP OR BOTTOM OF SLAB THICKNESS WILL NOT ALLOW 1'-0" PROJECTION. IN THOSE CASES, BARS WS MUST BE TIED TO TOP (TST) OR BOTTOM (BSB) MAT STEEL.