STD153.DGN

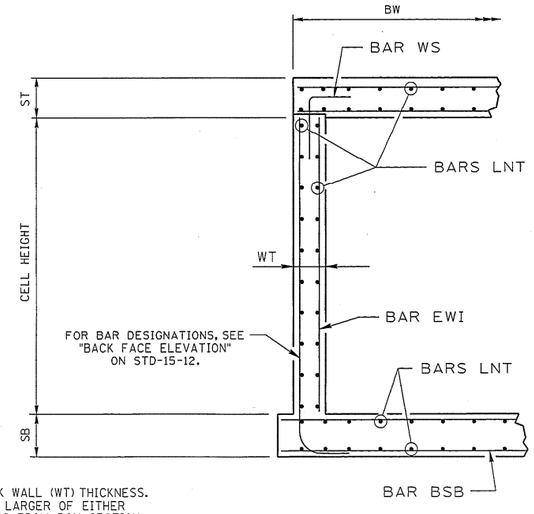

NOTE: CHECK WALL (WT) THICKNESS. USE THE LARGER OF EITHER THICKNESS FROM BOX SECTION OR RETAINING WALL TABLE.

BOX BRIDGE

NOTE: BAR A, BAR C AND BAR C1 TO REPLACE BAR EWE & BAR WS IN SB.

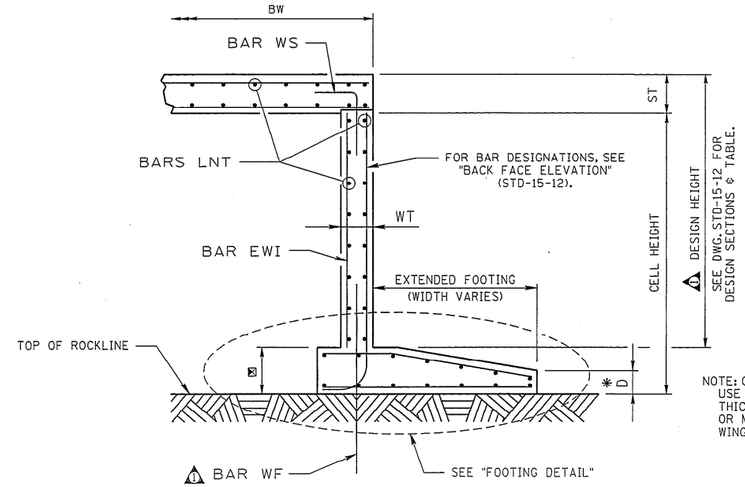

NOTE: CHECK WALL (WT) THICKNESS. USE THE LARGER OF EITHER THICKNESS FROM SLAB SECTION OR MAXIMUN DESIGN HEIGHT ON WINGWALL TABLE (STD-15-12).

SLAB BRIDGE

NOTE: BAR A, BAR C AND BAR C1 TO REPLACE BAR EWE.

TYPICAL SECTIONS

NOTE: APPLIES ONLY TO END SECTIONS OF CULVERTS SKEWED LESS THAN 60°.

CONST. NO.

PROJECT NO.	YEAR	SHEET NO.
	2000	

REVISIONS

NO.	DATE	BY	BRIEF DESCRIPTION
1	12-7-01	CMH	REVISED DIMENSION, TEXT AND NOTE.

NOTE: FOR "BOX DIMENSION DESIGNATIONS", SEE STD-15-3.

1 NOTE: FOR "REINFORCING BAR DESIGNATIONS", SEE STD-15-4.

NOTE: BARS A, BARS C AND BARS C1 CORRESPOND TO WINGWALL BARS. FOR BAR PLACEMENT, SPACING AND SIZE, SEE STD-15-12.

NOTE: ADDITIONAL CONCRETE AND REINFORCEMENT QUANTITIES FOR END SECTIONS SHALL BE ADJUSTED BASED ON AS BUILT DIMENSIONS.

* DENOTES MINIMUM DEPTH PER RETAINING WALL TABLE.

⊠ DENOTES FOOTING HEIGHT TO MATCH SLAB CULVERT SECTION STANDARD.

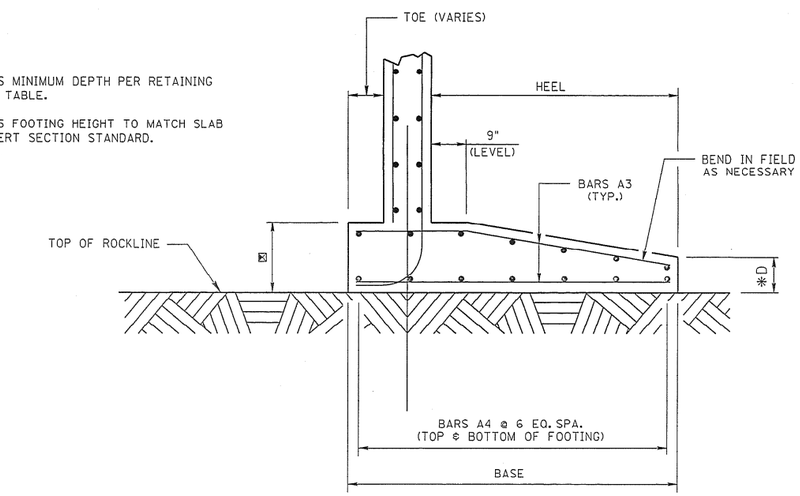

FOOTING DETAIL

NOTE: SEE STD-15-12 & 13 FOR MORE INFORMATION.

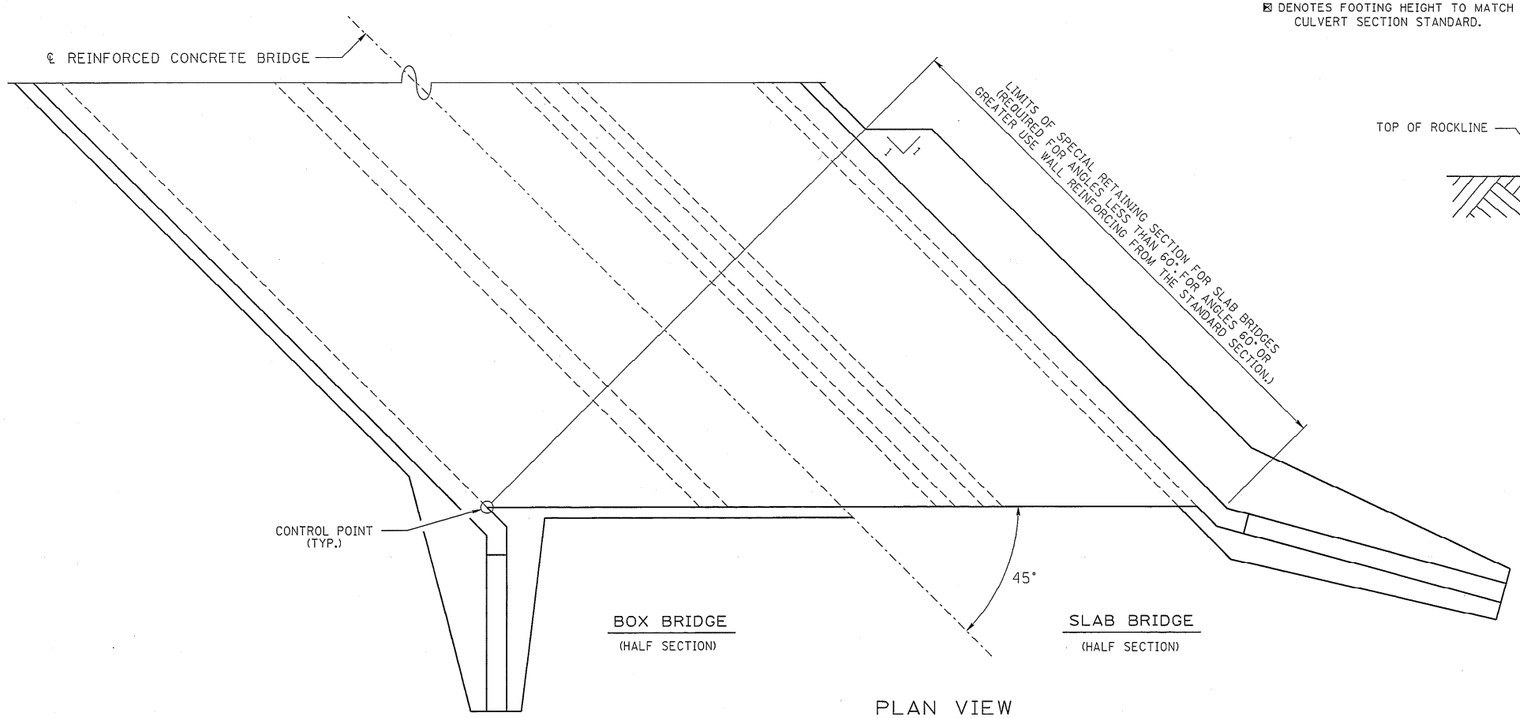

PLAN VIEW

(3 BARREL SHOWN. 1 AND 2 BARREL SIMILAR.)
(APPLIES ONLY TO END SECTIONS OF CULVERTS SKEWED LESS THAN 60°.)

STATE OF TENNESSEE
DEPARTMENT OF TRANSPORTATION

END SECTION DETAILS

STANDARD REINFORCED CONCRETE BRIDGE BOX AND SLAB TYPE

2000

CORRECT Edward P. Wasserman
ENGINEER OF STRUCTURES

DESIGNED BY	CMH / MAH	DATE	12-99
DRAWN BY	DIANE BUSH	DATE	12-99
SUPERVISED BY	RLH/JWP/MAH	DATE	12-99
CHECKED BY		DATE	

c:\Bentley\Workspace\dgn\std\ 08-FEB-2002 14:54

STD-15-24