STD156.DGN

CONST. NO.		
PROJECT NO.	YEAR	SHEET NO.
	2000	

REVISIONS

NO.	DATE	BY	BRIEF DESCRIPTION
1	2-28-03	JHW	REVISED DRAWING.

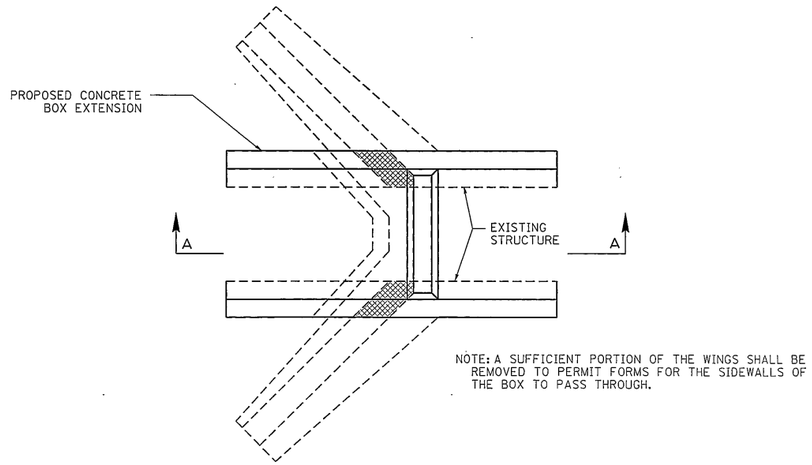

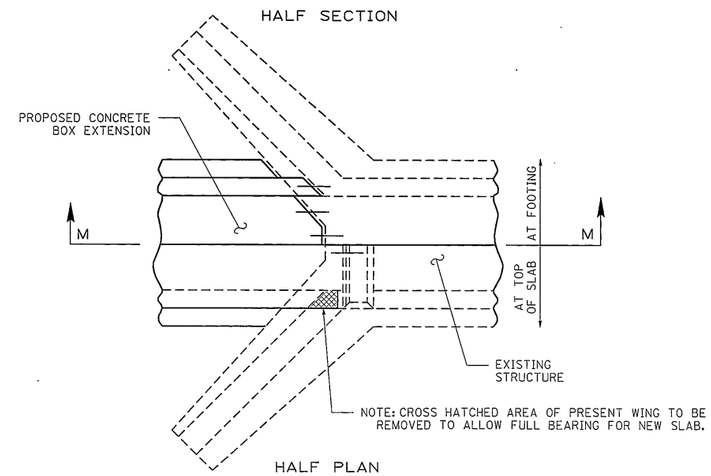

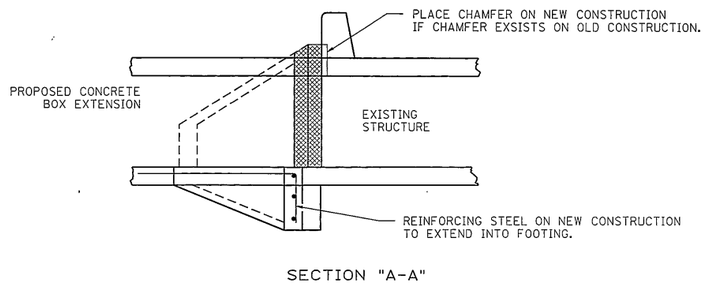

DETAILS OF BOX SECTION

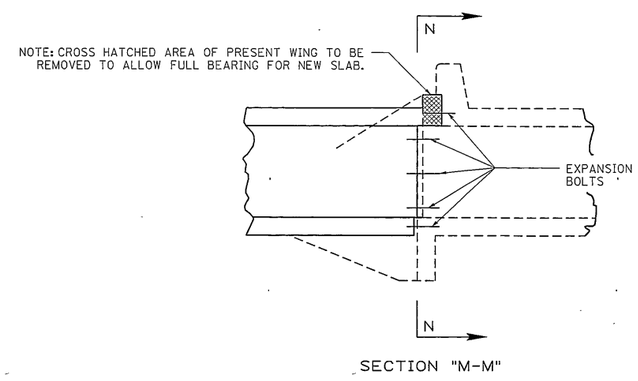

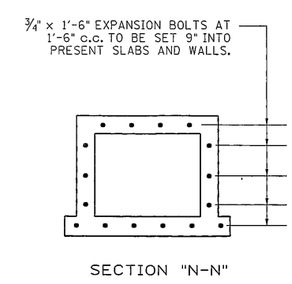

ALTERNATE DETAILS OF BOX SECTION

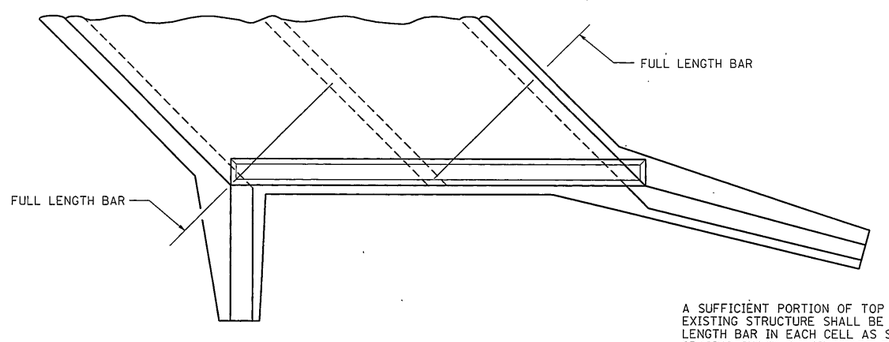

1 EXTENSION OF BOXES

FOR SKEWS LESS THAN 75°

A SUFFICIENT PORTION OF TOP AND BOTTOM SLAB, SIDEWALL, AND CURB OF EXISTING STRUCTURE SHALL BE REMOVED TO UNCOVER THE FIRST FULL LENGTH BAR IN EACH CELL AS SHOWN IN SKETCH. THEN RESUME BAR SPACING SHOWN ON STANDARD BOX USED FOR EXTENSION. A PORTION OF THE EXISTING WINGS SHALL BE REMOVED TO PERMIT THE SIDEWALLS TO PASS THROUGH.

STATE OF TENNESSEE
DEPARTMENT OF TRANSPORTATION

EXTENSION DETAILS

STANDARD REINFORCED CONCRETE BRIDGE BOX AND SLAB TYPE

2000

DESIGNED BY		DATE	
DRAWN BY	DIANE BUSH	DATE	12-99
SUPERVISED BY	RLH/JWP/MAH	DATE	12-99
CHECKED BY		DATE	

CORRECT Edward P. Wasserman
ENGINEER OF STRUCTURES

STD-15-22

d:\dgn\std\std156.dgn
09/02/2003