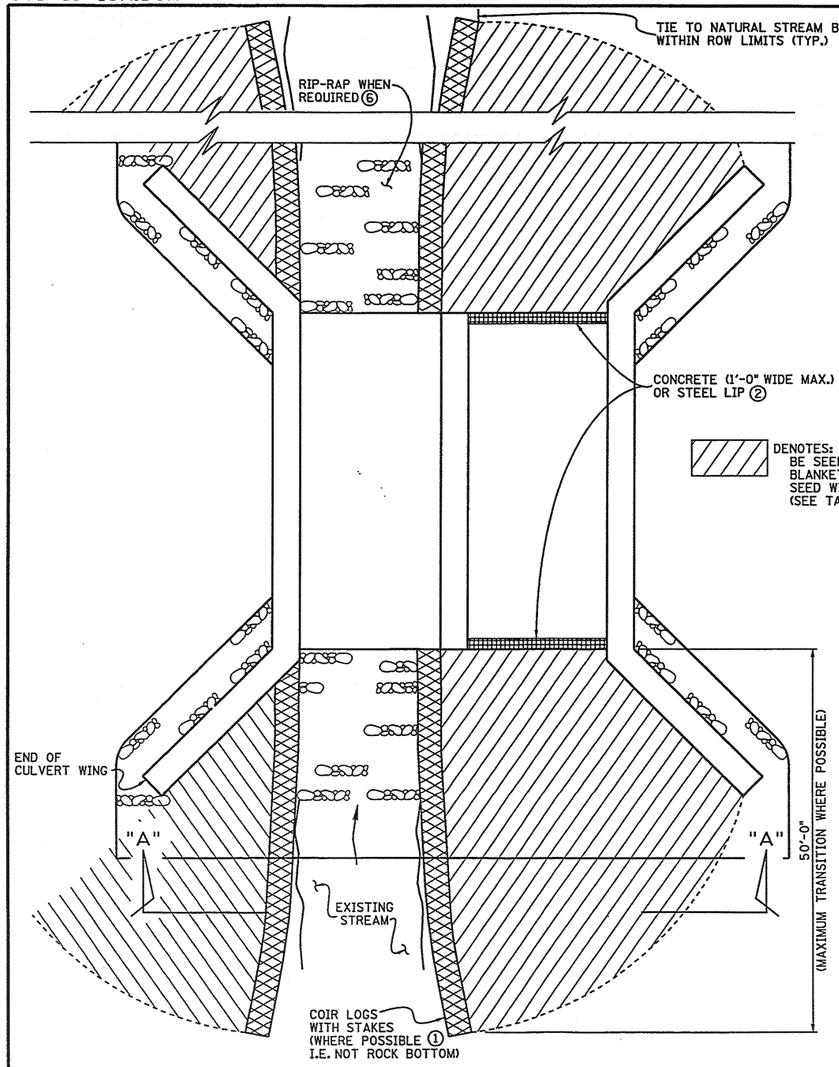

DENOTES: MATERIAL FROM CULVERT SITE EXCAVATION TO BE SEEDED AND WRAPPED WITH BIODEGRADABLE EROSION BLANKET (TYPE III) AND STAKED. (ITEM NO. 805-12.03) SEED WITH RIPARIAN ZONE/FLOODPLAIN SEED MIX. (SEE TABLE THIS SHEET)

PLAN

MULTI-BARREL CULVERT

1) ONE BARREL OF THE CULVERT IS TO BE ORIENTED INLINE WITH THE LOW FLOW CHANNEL.
2) COIR LOGS WITH STAKES ARE TO BE USED TO DIRECT FLOW INTO BARREL THAT IS INLINE WITH LOW FLOW CHANNEL.

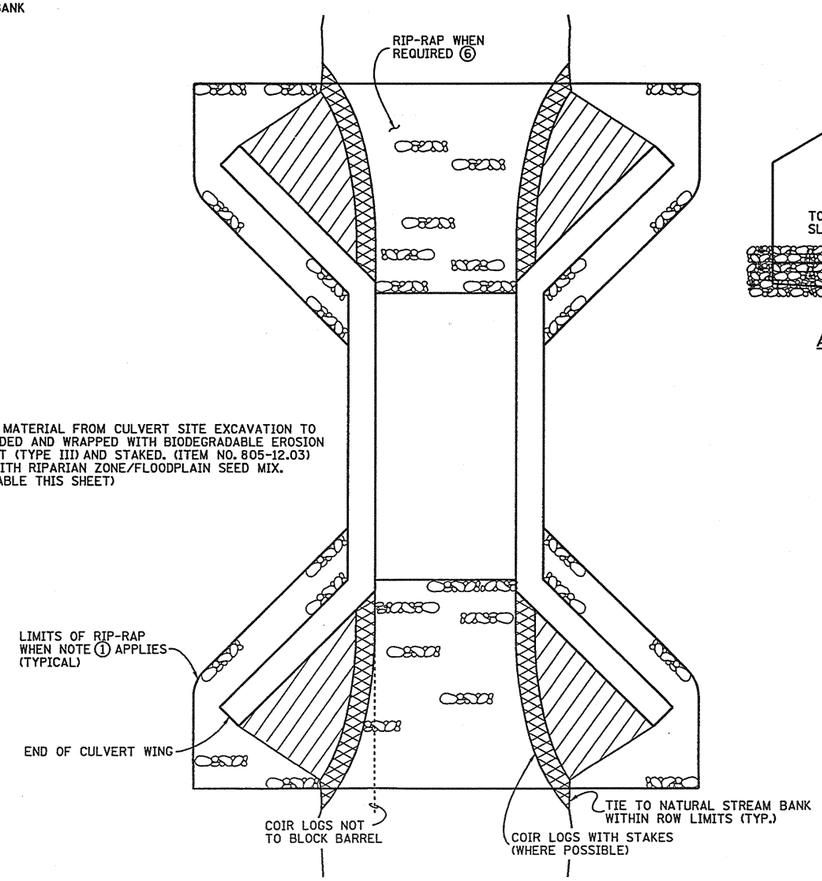

PLAN

SINGLE BARREL CULVERT

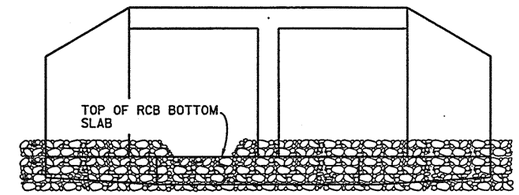

ALTERNATE SECTION "A"-"A" ①
(RIP-RAP ITEM NO. 709-05.XX)

PROJECT NO.	YEAR	SHEET NO.
	2007	

REVISIONS

NO.	DATE	BY	BRIEF DESCRIPTION

GENERAL NOTES:

① ALTERNATE IS TO FORM ENTIRE CROSS-SECTION WITH GABIONS OR RIP-RAP APPROPRIATELY SIZED FOR VELOCITY WITH TOP OF RIP-RAP LAYER NOT TO EXCEED 2'-0" ABOVE TOP OF BOTTOM SLAB OR SIGNIFICANTLY REDUCE BARREL OPENING.

② CONCRETE OR STEEL LIPS IN BARREL MAY BE USED AS AN ALTERNATIVE TO THE LOW FLOW CONSTRUCTION, WITH APPROVAL OF DESIGNER. COST TO BE INCLUDED IN ITEM 604-02.01.

③ WHEN RIP-RAP IS SPECIFIED FROM WING TIP TO WING TIP, LOW FLOW CHANNEL CONSTRUCTION IS TO BE FORMED BY RIP-RAP AS IN SECTION "A"-"A".

④ WHERE BEDROCK OR SLAB CULVERT IS USED, RIP-RAP SHOULD BE USED TO FORM LOW FLOW CHANNEL DIVERSION. SEE ALTERNATE SECTION "A"-"A" ABOVE.

⑤ THIS DRAWING IS TO BE CALLED FOR BY THE ENVIRONMENTAL DIVISION.

⑥ RIP-RAP PLACED IN THE STREAM CHANNEL SHALL BE COUNTERSUNK AND PLACED AT GRADE WITH THE EXISTING STREAM SUBSTRATE WITH EXCEPTION OF NOTE 1 AND SHALL MIMIC THE EXISTING CHANNEL CHARACTERISTICS.

⑦ LOW FLOW CHANNEL CONSTRUCTION SHALL NOT BEGIN UNTIL CULVERT BARRELS AND WINGS ARE COMPLETE.

RIPARIAN ZONE/FLOODPLAIN SEED MIX:

FOR STABILIZATION OF CHANNEL DIVERSION FILL AREAS FOLLOWING CONSTRUCTION

RIPARIAN ZONE/FLOODPLAIN SEED MIX: ITEM NO. (A SPECIAL PAY ITEM WILL BE REQUIRED)

COVER CROP SEED MIX

SCIENTIFIC NAME	COMMON NAME	SEEDING RATE		QUANTITY, BY WEIGHT	OVERALL QUANTITY
		POUNDS/ACRE	POUNDS/1,000 s.f.		
TRITICUM AESTIVUM	WINTER WHEAT	10.0	0.23	50%	15.4%
SECALE CEREALE	CEREAL RYE	10.0	0.23	50%	15.4%
COVER CROP TOTALS		20.0	0.46	100%	

GRASS SEED MIX

SCIENTIFIC NAME	COMMON NAME	SEEDING RATE		QUANTITY, BY WEIGHT	OVERALL QUANTITY
		POUNDS/ACRE	POUNDS/1,000 s.f.		
ENCHINOCHLOA MURICATA	BARNYARD GRASS	10.0	0.23	22%	15.4%
ELYMUS VIRGINICUS	VIRGINIA WILD RYE	10.0	0.23	22%	15.4%
LEERSIA ORYZOIDES	RICE CUT GRASS	10.0	0.23	22%	15.4%
PANICUM CLANDESTINUM	DEERTONGUE	10.0	0.23	22%	15.4%
CHASMANTHIUM LATIFOLIUM	RIVER OATS	5.0	0.12	12%	7.6%
GRASS TOTALS		45.0	1.04	100%	
GRAND TOTALS:		65.0	1.50		100%

PREPARATION OF THE SEEDBED (INCLUDING COIR LOGS AND STAKES) AND SOWING OF THE SEED MIXTURE SHALL BE AS SPECIFIED IN THE TDOT STANDARD SPECIFICATIONS MANUAL, SECTION 801. SEED SHALL BE APPLIED PRIOR TO WRAPPING WITH BIODEGRADABLE EROSION BLANKET (TYPE III).

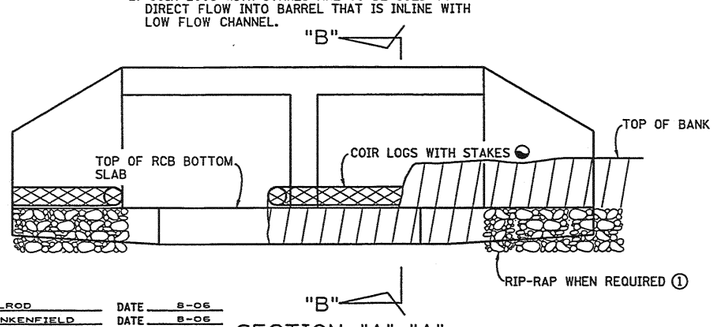

SECTION "A"-"A"

⊖ ITEM NO. 209-06.02 UNLESS OTHERWISE SPECIFIED BY DESIGNER.

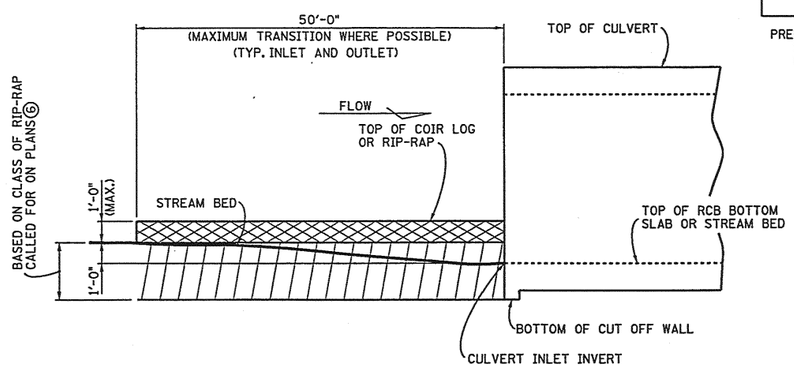

SECTION "B"-"B"

NOTE: 90° STRUCTURE SHOWN, STRUCTURE SKEW MAY VARY

NOTE: DRAWING NOT TO BE USED WHEN CULVERT IS LESS THAN 6' IN HEIGHT.

STATE OF TENNESSEE
DEPARTMENT OF TRANSPORTATION

LOW FLOW CHANNEL CONSTRUCTION DETAILS FOR CULVERT INLET AND OUTLET 2007

DESIGNED BY KEN ELROD	DATE 8-06	CORRECT Edward P. Wasserman, ENGINEER OF STRUCTURES	STD-15-16A
DRAWN BY K.L. FRANKENFIELD	DATE 8-06		
SUPERVISED BY KEN ELROD	DATE 8-06		
CHECKED BY	DATE		

D:\dgn\bjs\standard\std_15_16a.dgn
PLOT DATE 2007
08:30