FORTERRA

http://forterrabp.com/

400 Industrial Park Drive • Pelham, AL 35124 Phone: (205) 663-4681

Design Calculations-Precast Concrete Box Structures

Tennessee Department of Transportation Proposed Alternate Reinforcement for 36 in. x 48 in. & 36 in. x 96 in. Structures

DWAIN R. HAMBY
REGISTERED ENGINEER
AGRICULTURE
COMMERCE
NO. 113532
STATE OF TENNESSEE

12/17/21

Dwain R. Hamby, PE

12/17/2021

Precast Concrete Box Design

Project: TDOT Alternate Reinforcement for Precast Box Structures

Date: 12/17/21
Product: 48 in. x 36 in. Curb Inlets & Catch Basins (HL-93 Live Load)
Calculations By: DRH

Design Criteria:
- Top of wall at grade
- HL-93 Live Loading
- Water table at grade
- Base section walls are integral with base slab

References:
AASHTO LRFD Bridge Design Specification Eighth Edition, 2017

Material Properties and Assumptions:

Concrete Compressive Strength, 28 Days..... $f'_c := 5.0 \cdot ksi$

Correction Factor for Source of Aggregate..... $K_1 := 1.0$ AASHTO LRFD 5.4.2.4

Unit Weight, Concrete..... $w_c := 0.15 \cdot \frac{kip}{ft^3}$

Concrete Modulus of Elasticity..... $E_c := 120000 \cdot K_1 \cdot \left(\left(w_c \left(\frac{ft^3}{kip} \right) \right)^{2.0} \left(f'_c \cdot \left(\frac{in^2}{kip} \right) \right)^{0.33} \right) \cdot ksi = 4592.2\ ksi$
AASHTO LRFD Equation 5.4.2.4-1

Steel Yield for Rebar..... $f_y := 60 \cdot ksi$

Steel Modulus of Elasticity..... $E_s := 29000 \cdot ksi$

Exposure Factor, TDOT Structures Office Policy.... ... $\gamma_e := 0.88$ Corresponds to Crack Width 0.015 in. (See AASHTO LRFD C5.6.7)

Unit Weight, Soil..... $\gamma_s := 0.12 \cdot \frac{kip}{ft^3}$

Unit Weight, Water..... $\gamma_w := 0.0624 \cdot \frac{kip}{ft^3}$

Active Lateral Earth Pressure Coefficient, ka (AASHTO LRFD Reference 3.11.5.3)

Effective Angle of Internal Friction..... $\phi'_f := 30\ deg$

Friction Angle Between Fill and Wall..... $\delta := 0.67 \cdot \phi'_f = 20.1\ deg$

Angle of Fill to the Horizontal..... $\beta := 0\ deg$

Angle of Back Face of Wall to the Horizontal..... $\theta := 90\ deg$

$$\Gamma := \left(1 + \sqrt{\frac{\sin(\phi'_f + \delta) \cdot \sin(\phi'_f - \beta)}{\sin(\theta - \delta) \cdot \sin(\theta + \beta)}} \right)^2 = 2.69$$

$$k_a := \frac{\left(\sin(\theta + \phi'_f)\right)^2}{\Gamma \cdot \left(\sin(\theta)^2 \sin(\theta - \delta)\right)} = 0.3$$

Equivalent Fluid Density, Fully Saturated Soil..... $\gamma_{eq} := (\gamma_s - \gamma_w) \cdot k_a + \gamma_w = 0.0795\ \frac{kip}{ft^3}$

Live Load and Dynamic Load Allowance:

Live Load..... $LL := 16\ kip$ HL- 93 Wheel Load

Dynamic Load Allowance..... $IM_{dt} := 1.33$

Load and Resistance Factors:

$\eta_D := 1.0$ Ductility Load Modifier, AASHTO LRFD 1.3.3

$\eta_{R_DL} := 1.0$ Redundancy Load Modifier, AASHTO LRFD 1.3.4, Dead Loads

$\eta_{R_LL} := 1.0$ Redundancy Load Modifier, AASHTO LRFD 1.3.4, Live Loads

$\eta_I := 1.0$ Importance Load Modifier, AASHTO LRFD 1.3.5

$\eta_{R_SL} := 1.05$ Redundancy Load Modifier, AASHTO LRFD 1.3.4 & 12.5.4, Soil Loads

$m := 1.2$ Multiple Presence Factor, AASHTO LRFD Table 3.6.1.1.2-1

$LLF_i := 1.75$ $LLF := m \cdot LLF_i \cdot \eta_D \cdot \eta_{R_LL} \cdot \eta_I = 2.10$ $LLF_h := LLF_i \cdot \eta_D \cdot \eta_{R_LL} \cdot \eta_I = 1.75$ Live Load Factor, AASHTO LRFD Table 3.4.1-1

$DLF_i := 1.25$ $DLF := DLF_i \cdot \eta_D \cdot \eta_{R_DL} \cdot \eta_I = 1.25$ Dead Load Factor, AASHTO LRFD Table 3.4.1-1 & Table 3.4.1-2

$SLF_{ih} := 1.5$ $SLF_h := SLF_{ih} \cdot \eta_D \cdot \eta_{R_SL} \cdot \eta_I = 1.58$ Soil Load Factor, AASHTO LRFD Table 3.4.1-1 & Table 3.4.1-2 (EH, Active)

$SLF_{iv} := 1.3$ $SLF_v := SLF_{iv} \cdot \eta_D \cdot \eta_{R_SL} \cdot \eta_I = 1.37$ Soil Load Factor, AASHTO LRFD Table 3.4.1-1 & Table 3.4.1-2 (EV)

$\phi_f := 0.90$ Resistance Factor-Flexure, AASHTO LRFD 5.5.4.2 (Assumed, Verify in Flexural Calcs.)

$\phi_v := 0.90$ Resistance Factor-Shear, AASHTO LRFD 5.5.4.2

$\beta := 2.0$ Shear Factor- AASHTO LRFD 5.7.3.4.1

$$\beta_{1'} := 0.85 - 0.05 \cdot \left(\frac{f'_c}{ksi} - 4\right) = 0.8 \qquad \beta_1 := \begin{cases} 0.65 & \text{if } \beta_{1'} \le 0.65 \\ \left(\beta_{1'}\right) & \text{also if } 0.65 < \beta_{1'} < 0.85 \\ 0.85 & \text{else} \end{cases} \qquad \beta_1 = 0.80$$

Precast Concrete Box Design

Product Data:

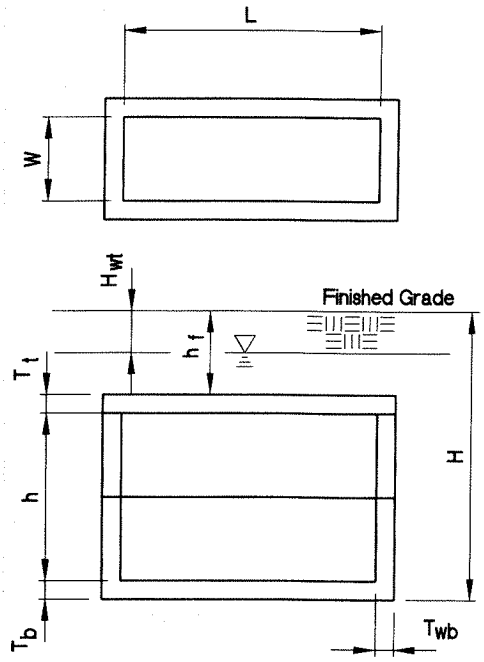

Width, Short Dimension..... $W := 3.00 \cdot ft$

Length, Long Dimension..... $L := 4.00 \cdot ft$

Top Slab Thickness..... $T_t := 10 \cdot in$

Bottom Slab Thickness..... $T_b := 6 \cdot in$

Base & Riser Wall Thickness..... $T_{wb} := 6 \cdot in$

Design Span Width..... $Span_W := W + T_{wb} = 3.50\ ft$

Design Span Length..... $Span_L := L + T_{wb} = 4.50\ ft$

Inside Total Height..... $h := 11 \cdot ft + 8 \cdot in$

Soil Fill Above Top Slab..... $h_f := 0.0 \cdot in$

Depth to Water Table..... $H_{wt} := 0 \cdot ft$

Design Beam Width, Flexure..... $b := 12 \cdot in$

Design Beam Width, Shear..... $b_v := 12\ in$

Design Strip Moment of Inertia..... $I_{g.wall} := \frac{b \cdot T_{wb}^3}{12} = 216\ in^4$ Base and Riser Walls

$I_{g.base} := \frac{b \cdot T_b^3}{12} = 216\ in^4$ Base Floor Slab

Depth to Bottom of Base Slab..... $H := h_f + T_t + h + T_b = 13\ ft$

Vertical Stack Geometry:

Height of Base Section..... $h_{bb} := 4 \cdot ft + 0 \cdot in$

Height of Bottom Riser Section..... $h_r := 4 \cdot ft + 0 \cdot in$

Height of Interm. Riser Sections..... $h_{r2} := 3 \cdot ft + 8 \cdot in$

Note: These dimensions used for design. Mfg. heights will vary.

Bar Diameters, Concrete Cover and Effective Depths:

Base Section Walls:

Base Wall Concrete Cover..... $C_w := 2.85 \cdot in$

Bar Diameter, Base Walls..... $Db_w := .309 \cdot in$ Horizontal Direction

$Db_{wv} := .309 \cdot in$ Vertical Direction,Cantilever

Horizontal Wall ds Dimension..... $d_w := T_{wb} - C_w - 0.5 \cdot Db_w = 3.00\ in$

Cantilever Wall ds Dimension..... $d_c := T_{wb} - C_w - (Db_w + 0.5 \cdot Db_{wv}) = 2.69\ in$

Base Section Floor Slab:

Base Floor Slab Concrete Cover..... $C_b := 2.0 \cdot in$

Bar Diameter, Base Floor Slab..... $Db_{bs} := .375 \cdot in$ Short Direction

$Db_{bl} := .375 \cdot in$ Long Direction

ds Dimension (Short Direction)..... $d_{bs} := T_b - C_b - 0.5 \cdot Db_{bs} = 3.81\ in$

ds Dimension (Long Direction)..... $d_{bl} := T_b - C_b - (Db_{bs} + 0.5 \cdot Db_{bl}) = 3.44\ in$

Riser Section Walls:

Riser Wall Concrete Cover..... $C_{wr} := 2.85 \cdot in$

Bar Diameter, Riser Walls..... $Db_{wr} := .309 \cdot in$ Horizontal Direction

$Db_{wvr} := .309 \cdot in$ Vertical Direction

Riser Horizontal Wall ds Dimension.... $d_{wr} := T_{wb} - C_{wr} - 0.5 \cdot Db_{wr} = 3.00\ in$

Riser Vertical Wall ds Dimension.... $d_{cr} := T_{wb} - C_{wr} - \left(Db_{wr} + 0.5 \cdot Db_{wvr}\right) = 2.69\ in$

Design of Base Section:

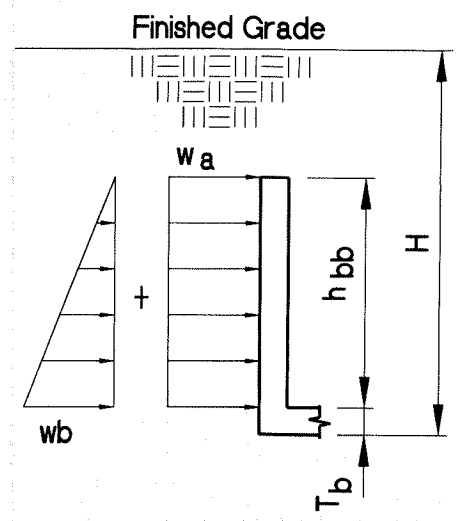

Loading - Walls of Base Section - External Lateral Pressure

Lateral Live Load Surcharge (LS)

Depth to bottom of section..... $H_b := H - T_b = 12.5\ ft$

Equivalent Height of Soil..... $h_{eq} := 4.0\ ft$
AASHTO LRFD Table 3.11.6.4-1

Lateral Earth Surcharge from LL... $LS := k_a \cdot \gamma_s \cdot h_{eq}$

$LS = 0.143\ ksf$ Service Load

Lateral Earth Pressure (EH) Loading above section (Service Load):

$$EH_{abv} := \left(H - T_b - h_{bb} - H_{wt}\right) \cdot \left(\gamma_{eq}\right) + H_{wt} \cdot \gamma_s \cdot k_a$$

Total Loading above section (Service Load):

$$w_{as} := LS + EH_{abv}$$

$$w_{as} = 0.819\ ksf$$

Lateral Earth Pressure (EH) Loading directly on section (Service Load):

$$EH_{dir} := h_{bb} \cdot \gamma_{eq}$$

$EH_{dir} = 0.318\ ksf$ Note: $w_{bs} := EH_{dir}$

Total Loading (Service):

$$w_{svc} := \left(w_{as} + \frac{w_{bs}}{2}\right) \cdot b = 0.978\ klf$$

Total Loading (Factored):

$$w_a := \left(LS \cdot LLF_h\right) + \left(EH_{abv} \cdot SLF_h\right) = 1.314\ ksf$$

$$w_b := \left(EH_{dir} \cdot SLF_h\right) = 0.501\ ksf$$

$$w_u := \left(w_a + \frac{w_b}{2}\right) \cdot b = 1.565\ klf$$

Analysis of Deflections, Base Section Walls--Fixed-End Condition:

Maximum Horizontal Deflection At Mid-Span..... $\Delta max_{horiz} := \frac{(w_{svc}) \cdot Span_L^{\ 4}}{384 \cdot E_c \cdot I_{g.wall}} = 0.0018\ in$

Maximum Deflection At Top of Base Wall..... $\Delta max_{cant} := \frac{(w_{as} \cdot b) \cdot h_{bb}^{\ 4}}{8 \cdot E_c \cdot I_{g.wall}} + \frac{(w_{bs} \cdot h_{bb} \cdot .50 \cdot b) \cdot h_{bb}^{\ 3}}{15 \cdot E_c \cdot I_{g.wall}} = 0.0504\ in$

Percent of Load Carried In Cantilever Direction..... $K_{cant} := \frac{\Delta max_{horiz}}{\Delta max_{horiz} + \Delta max_{cant}} = 0.03$

Percent of Load Carried In Horizontal Direction..... $K_{horiz} := 1 - K_{cant} = 0.97$

Bending Moment Analysis Horizontal Loading (Base Section Walls):

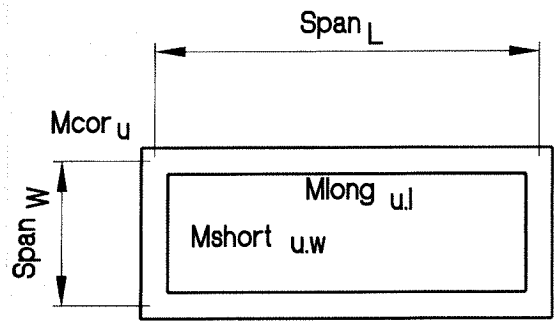

Moment In Corners..... $Mcor_u := K_{horiz} \cdot \frac{w_u}{12} \cdot \left(\frac{Span_L^{\ 3} + Span_W^{\ 3}}{Span_L + Span_W} \right) = 2.11\ \boldsymbol{kip \cdot ft}$

Moment in Long Span..... $Mlong_{u.l} := K_{horiz} \cdot \frac{(w_u) \cdot Span_L^{\ 2}}{8} - Mcor_u = 1.71\ \boldsymbol{kip \cdot ft}$

Moment in Short Span..... $Mshort_{u.w} := K_{horiz} \cdot \frac{(w_u) \cdot Span_W^{\ 2}}{8} - Mcor_u = 0.2\ \boldsymbol{kip \cdot ft}$

Maximum Factored Moment..... $Mcor_u = 2.11\ \boldsymbol{kip \cdot ft}$

Determine Required Circumferential Reinforcement (Base Section Walls):

Steel Area Required..... $A_{swh} := \left(1 - \left(\sqrt{1 - \frac{2 \cdot Mcor_u}{\phi_f \cdot b \cdot (d_w)^2 \cdot 0.85 \cdot f'_c}}\right)\right) \cdot \frac{0.85 \cdot f'_c \cdot b \cdot d_w}{f_y}$

Area of Flexural Reinforcing, ... $A_{swh} = 0.16\ \boldsymbol{in^2}$

Check Minimum Required Reinforcement Base Section Wall Horizontal Direction (AASHTO LRFD Section 5.6.3.3)

Flexural Cracking Variability Factor..... $\gamma_1 := 1.6$

Ratio of Yield Strength to Ultimate Tensile Strength..... $\gamma_3 := 0.67$

Half of Wall Section Thickness..... $c_{nc} := \frac{T_{wb}}{2} = 3\ \boldsymbol{in}$

Concrete Density Modification Factor..... $\lambda := 1.0$

Modulus of Rupture of Concrete..... $f_r := 0.24 \cdot \lambda \cdot \left(f'_c \cdot \left(\frac{in^2}{kip}\right)\right)^{0.5} \cdot ksi = 0.537\ ksi$

Section Modulus, Non-Composite Section..... $S_{nc} := \frac{I_{g.wall}}{c_{nc}} = 72\ in^3$

Cracking Moment..... $M_{cr} := \gamma_3 \cdot (\gamma_1 \cdot f_r) \cdot S_{nc} = 3.45\ kip \cdot ft$

Alternate Moment for Min. Reinf. Consideration..... $M_{u.min} := 1.33 \cdot Mcor_u = 2.8\ kip \cdot ft$

Controlling Moment for Min. Reinf. Evaluation..... $M_{u.min} := \text{if}\left(M_{cr} \le M_{u.min}, M_{cr}, M_{u.min}\right)$

$M_{u.min} = 2.8\ kip \cdot ft$

Min. Req'd Steel Area Base Walls (Horizontal):

$$A_{s.min} := \left(1 - \left(\sqrt{1 - \frac{2 \cdot M_{u.min}}{\phi_f \cdot b \cdot (d_w)^2 \cdot 0.85 \cdot f'_c}}\right)\right) \cdot \frac{0.85 \cdot f'_c \cdot b \cdot d_w}{f_y}$$

$A_{s.min} = 0.22\ in^2$

$A_{swh} := \text{if}\left(A_{swh} > A_{s.min}, A_{swh}, A_{s.min}\right)$

Req'd Steel Area Base Walls (Horizontal)..... $A_{swh} = 0.22\ in^2$

Check Required Shrinkage and Temperature Reinforcement (AASHTO LRFD Section 5.10.6)

$$A_{s.temp'} := \frac{1.3 \cdot b \cdot T_{wb}}{2 \cdot (b + T_{wb}) \cdot f_y \cdot \left(\frac{in}{kip}\right)} = 0.04\ in^2$$

$$A_{s.temp} := \begin{cases} 0.11\ in^2 & \text{if } A_{s.temp'} \le 0.11\ in^2 \\ \left(A_{s.temp'}\right) & \text{also if } 0.11\ in^2 < A_{s.temp'} < 0.60\ in^2 \\ 0.60\ in^2 & \text{else} \end{cases}$$

$A_{s.temp} = 0.11\ in^2$

$A_{swh} := \text{if}\left(A_{swh} > A_{s.temp}, A_{swh}, A_{s.temp}\right)$

Req'd Steel Area Base Walls (Horizontal)..... $A_{swh} = 0.22\ in^2$

Check Steel Provided (Walls Horizontal Base Section):

Bar Diameter..... $Db_w = 0.309\ in$

Steel Spacing..... $spacing_h := 3 \cdot in$

Area of Steel..... $A_{bar} := \pi \cdot \frac{Db_w^{\ 2}}{4} = 0.075\ in^2$ $A_{bar} := \text{Round}\left(A_{bar}, .001 \cdot in^2\right) = 0.075\ in^2$

Area Provided with Spacing..... $A_{s.prov.h} := \frac{A_{bar} \cdot 1 \cdot ft}{spacing_h} = 0.30\ in^2$

Area Required..... $A_{swh} = 0.22\ in^2$ $\text{if}\left(A_{swh} \le A_{s.prov.h}, \text{"OK"}, \text{"NG"}\right) = \text{"OK"}$

Check Steel Reinforcement Yield for Flexure (Walls Horizontal Base Section) AASHTO LRFD 5.6.2.1:

Depth of Equivalent Rectangular Stress Block.... $a := \frac{A_{s.prov.h} \cdot f_y}{0.85 \cdot f'_c \cdot b} = 0.35\ in$

Distance to Neutral Axis..... $c := \frac{a}{\beta_1} = 0.44\ in$

Distance to the Centroid of Tensile Reinf..... $d_s := d_w = 3\ in$

Strain Limit for Tensile Reinf. (Table C5.6.2.1-1)..... $\varepsilon_{cl} := .002$

Check that Tensile Reinforcement has Yielded..... $Check_1 := \frac{c}{d_s} = 0.147$

$Check_2 := \frac{.003}{.003 + \varepsilon_{cl}} = 0.6$

$Verify := \text{if}\left(Check_1 \le Check_2, \text{"Tension Control"}, \text{"Not Tension Control""}\right) = \text{"Tension Control"}$

Steel Yields, Assumption Phi (Flexure=0.90) is OK

Check Crack Control for Wall Steel (Base Section Wall Horizontal)

Service Moment In Corners..... $Mcor_s := K_{horiz} \cdot \frac{w_{svc}}{12} \cdot \left(\frac{Span_L^{\ 3} + Span_W^{\ 3}}{Span_L + Span_W}\right) = 1.32\ kip \cdot ft$

Depth to centroid of wall reinforcing..... $d := d_w$ $\quad d = 3.00\ in$

Concrete cover from extreme tension fiber to center of flexural reinforcement..... $d_{c.cvr} := C_w + \frac{Db_w}{2} = 3\ in$

Modular ratio..... $n := E_s \div E_c$ $\quad n = 6.3$

Reinforcement ratio..... $\rho := \frac{A_{s.prov.h}}{b \cdot d}$ $\quad \rho = 0.00835$

Compression factors: $k := \sqrt{2 \cdot \rho \cdot n + (\rho \cdot n)^2} - \rho \cdot n$ $\quad k = 0.276$

$j := 1 - k \div 3$ $\quad j = 0.908$

Service tensile force in steel..... $T_{s.h} := \frac{Mcor_s}{j \cdot d}$ $\quad T_{s.h} = 5.81\ kip$

Service tensile stress in steel..... $f_{s.h} := \frac{T_{s.h}}{A_{s.prov.h}}$ $\quad f_{s.h} = 19.37\ ksi$

Calculate Beta S..... $\beta_s := 1 + \frac{d_{c.cvr}}{0.7 \cdot (T_{wb} - d_{c.cvr})}$ $\quad \beta_s = 2.433$

AASHTO LRFD Equation 5.6.7-2

Max spacing reinforcement ..... $s_{max.h} := \left(\frac{700 \cdot \gamma_e \cdot in}{\beta_s \cdot \frac{f_{s.h}}{ksi}}\right) - 2 \cdot d_{c.cvr} = 7.1\ in$

AASHTO LRFD Equation 5.6.7-1

$s_{max.h} := min\left(1.5 \cdot T_{wb}, s_{max.h}, 18\ in\right) = 7.1\ in$

Check steel spacing for crack control..... $check_h := \text{if}\left(spacing_h \le \left|s_{max.h}\right|, \text{"OK"}, \text{"NG"}\right)$ $\quad check_h = \text{"OK"}$

Check Wall Shear Capacity Horizontal Loading (Base Section Walls)

Determine Effective Shear Depth..... $M_n := A_{s.prov.h} \cdot f_y \cdot \left(d_w - \frac{a}{2}\right) = 4.23\ kip \cdot ft$

$d_{wv'} := \frac{M_n}{A_{s.prov.h} \cdot f_y} = 2.82\ in$

$d_{e1} := 0.9 \cdot d_w = 2.7\ in$

$d_{e2} := 0.72 \cdot T_{wb} = 4.32\ in$

$d_e := \text{if}\left(d_{e1} \geq d_{e2}, d_{e1}, d_{e2}\right) = 4.32\ in$

$d_{wv} := \text{if}\left(d_{wv'} > d_e, d_{wv'}, d_e\right) = 4.32\ in$

Maximum Shear Load on Walls (Horizontal)..... $V_u := K_{horiz} \cdot (w_u) \cdot \left(\frac{L}{2} - d_{wv}\right)$ $V_u = 2.48\ kip$

Shear Capacity, Wall (Horizontal)..... $\phi V_c := \phi_v \cdot 0.0316 \cdot \beta \cdot \left(\sqrt{\frac{f'_c}{ksi}} \cdot ksi\right) \cdot b_v \cdot (d_{wv})$

$\phi V_c = 6.59\ kip$

$\text{if}\left(V_u < \phi V_c, \text{"OK"}, \text{"NG"}\right) = \text{"OK"}$

Design of Vertical Reinforcement (Base Section Wall Cantilever Direction)

Moment At Base of Wall..... $Mcant_u := K_{cant} \cdot \frac{w_a \cdot h_{bb}^2 \cdot b}{2} + K_{cant} \cdot \frac{w_b \cdot h_{bb}^2 \cdot b}{6} = 0.41\ kip \cdot ft$

Steel Area Required..... $A_{swv} := \left(1 - \left(\sqrt{1 - \frac{2 \cdot Mcant_u}{\phi_f \cdot b \cdot d_c^2 \cdot 0.85 \cdot f'_c}}\right)\right) \cdot \frac{0.85 \cdot f'_c \cdot b \cdot d_c}{f_y}$

Area Of Flexural Reinforcing,
Cantilever Direction (Walls Vertical)..... $A_{swv} = 0.03\ in^2$

Check Minimum Required Reinforcement Base Section Wall Cantilever Direction (AASHTO LRFD Section 5.6.3.3)

Flexural Cracking Variabilty Factor..... $\gamma_1 := 1.6$

Ratio of Yield Strength to Ultimate Tensile Strength..... $\gamma_3 := 0.67$

Half of Wall Section Thickness..... $c_{nc} := \frac{T_{wb}}{2} = 3\ in$

Concrete Density Modification Factor..... $\lambda := 1.0$

Modulus of Rupture of Concrete..... $f_r := 0.24 \cdot \lambda \cdot \left(f'_c \cdot \left(\frac{in^2}{kip}\right)\right)^{0.5} \cdot ksi = 0.537\ ksi$

Section Modulus, Non-Composite Section..... $S_{nc} := \frac{I_{g.wall}}{c_{nc}} = 72\ in^3$

Cracking Moment..... $M_{cr} := \gamma_3 \cdot (\gamma_1 \cdot f_r) \cdot S_{nc} = 3.45\ kip \cdot ft$

Alternate Moment for Min. Reinf. Consideration..... $M_{u.min} := 1.33 \cdot Mcant_u = 0.55\ kip \cdot ft$

Controlling Moment for Min. Reinf. Evaluation..... $M_{u.min} := \text{if}\left(M_{cr} \le M_{u.min}, M_{cr}, M_{u.min}\right)$

$M_{u.min} = 0.55\ kip \cdot ft$

Min. Req'd Steel Area Walls (Vertical):

$$A_{s.min} := \left(1 - \left(\sqrt{1 - \frac{2 \cdot M_{u.min}}{\phi_f \cdot b \cdot (d_c)^2 \cdot 0.85 \cdot f'_c}}\right)\right) \cdot \frac{0.85 \cdot f'_c \cdot b \cdot d_c}{f_y}$$

$A_{s.min} = 0.05\ in^2$

$A_{swv} := \text{if}\left(A_{swv} > A_{s.min}, A_{swv}, A_{s.min}\right)$

Req'd Steel Area Base Walls (Vertical)..... $A_{swv} = 0.05\ in^2$

Check Required Shrinkage and Temperature Reinforcement (AASHTO LRFD Section 5.10.6)

$$A_{s.temp'} := \frac{1.3 \cdot b \cdot T_{wb}}{2 \cdot (b + T_{wb}) \cdot f_y \cdot \left(\frac{in}{kip}\right)} = 0.04\ in^2$$

$$A_{s.temp} := \left\| \begin{array}{l} \text{if } A_{s.temp'} \le 0.11\ in^2 \\ \quad \| \ 0.11\ in^2 \\ \text{also if } 0.11\ in^2 < A_{s.temp'} < 0.60\ in^2 \\ \quad \| \ \left(A_{s.temp'}\right) \\ \text{else} \\ \quad \| \ 0.60\ in^2 \end{array} \right\|$$

$A_{s.temp} = 0.11\ in^2$

$A_{swv} := \text{if}\left(A_{swv} > A_{s.temp}, A_{swv}, A_{s.temp}\right)$

Req'd Steel Area Base Walls (Vertical)..... $A_{swv} = 0.11\ in^2$

Check Steel Provided (Walls Vertical Base Section):

Bar Diameter..... $Db_{wv} = 0.309\ in$

Steel Spacing..... $spacing_v := 3 \cdot in$

Area of Steel..... $A_{bar} := \pi \cdot \frac{Db_{wv}^2}{4} = 0.075\ in^2$ $\quad A_{bar} := \text{Round}\left(A_{bar}, .001 \cdot in^2\right) = 0.075\ in^2$

Area Provided with Spacing..... $A_{s.prov.v} := \frac{A_{bar} \cdot 1 \cdot ft}{spacing_v} = 0.30\ in^2$

Area Required..... $A_{swv} = 0.11\ in^2$ $\quad \text{if}\left(A_{swv} \le A_{s.prov.v}, \text{"OK"}, \text{"NG"}\right) = \text{"OK"}$

Check Steel Reinforcement Yield for Flexure (Walls Vertical Base Section) AASHTO LRFD 5.6.2.1:

Depth of Equivalent Rectangular Stress Block.... $a := \frac{A_{s.prov.v} \cdot f_y}{0.85 \cdot f'_c \cdot b} = 0.35\ in$

Distance to Neutral Axis..... $c := \frac{a}{\beta_1} = 0.44\ in$

Distance to the Centroid of Tensile Reinf..... $d_s := d_c = 2.69\ in$

Strain Limit for Tensile Reinf. (Table C5.6.2.1-1)..... $\varepsilon_{cl} := .002$

Check that Tensile Reinforcement has Yielded..... $Check_1 := \frac{c}{d_s} = 0.164$

$Check_2 := \frac{.003}{.003 + \varepsilon_{cl}} = 0.6$

$Verify := \text{if}\left(Check_1 \le Check_2, \text{"Tension Control"}, \text{"Not Tension Control""}\right) = \text{"Tension Control"}$

Steel Yields, Assumption Phi (Flexure=0.90) is OK

Check Crack Control for Vertical Wall Steel (Base Section)

Service Moment at base of wall..... $Mcant_s := K_{cant} \cdot \frac{w_{as} \cdot h_{bb}^2 \cdot b}{2} + K_{cant} \cdot \frac{w_{bs} \cdot h_{bb}^2 \cdot b}{6} = 0.26\ kip \cdot ft$

Depth to centroid of wall reinforcing..... $d := d_c$ $\quad d = 2.69\ in$

Concrete cover from extreme tension fiber to center of flexural reinforcement..... $d_{c.cvr} := C_w + \left(Db_w + 0.5 \cdot Db_{wv}\right) = 3.31\ in$

Modular ratio..... $n := E_s \div E_c$ $\quad n = 6.3$

Reinforcement ratio..... $\rho := \frac{A_{s.prov.v}}{b \cdot d}$ $\quad \rho = 0.00931$

Compression factors: $k := \sqrt{2 \cdot \rho \cdot n + (\rho \cdot n)^2} - \rho \cdot n$ $\quad k = 0.289$

$j := 1 - k \div 3$ $\quad j = 0.904$

Service tensile force in steel..... $T_{s.v} := \frac{Mcant_s}{j \cdot d}$ $\quad T_{s.v} = 1.27\ kip$

Service tensile stress in steel..... $f_{s.v} := \frac{T_{s.v}}{A_{s.prov.v}}$ $\quad f_{s.v} = 4.25\ ksi$

Calculate Beta S..... $\beta_s := 1 + \frac{d_{c.cvr}}{0.7 \cdot \left(T_{wb} - d_{c.cvr}\right)}$ $\quad \beta_s = 2.762$

AASHTO LRFD Equation 5.6.7-2

Max spacing reinforcement ..... $s_{max.v} := \left(\frac{700 \cdot \gamma_e \cdot in}{\beta_s \cdot \frac{f_{s.v}}{ksi}}\right) - 2 \cdot d_{c.cvr} = 45.9\ in$

AASHTO LRFD Equation 5.6.7-1

$s_{max.v} := min\left(1.5 \cdot T_{wb}, s_{max.v}, 18\ in\right) = 9\ in$

Check steel spacing for crack control..... $check_v := \text{if}\left(spacing_v \le \left|s_{max.v}\right|, \text{"OK"}, \text{"NG"}\right)$ $\quad check_v = \text{"OK"}$

Check Wall Shear Capacity Vertical Loading (Base Section Walls)

Determine Effective Shear Depth.....

$$M_n := A_{s.prov.v} \cdot f_y \cdot \left(d_c - \frac{a}{2}\right) = 3.77\ kip \cdot ft$$

$$d_{cv'} := \frac{M_n}{A_{s.prov.v} \cdot f_y} = 2.51\ in$$

$$d_{e1} := 0.9 \cdot d_c = 2.42\ in$$

$$d_{e2} := 0.72 \cdot T_{wb} = 4.32\ in$$

$$d_e := \text{if}\left(d_{e1} \geq d_{e2}, d_{e1}, d_{e2}\right) = 4.32\ in$$

$$d_{cv} := \text{if}\left(d_{cv'} > d_e, d_{cv'}, d_e\right) = 4.32\ in$$

Maximum Shear Load on Walls (Vertical)..... $V_u := K_{cant} \cdot (w_u) \cdot (h_{bb})$ $\quad V_u = 0.22\ kip$

Shear Capacity, Wall (Base of Cantilever)..... $\phi V_c := \phi_v \cdot 0.0316 \cdot \beta \cdot \left(\sqrt{\frac{f'_c}{ksi}} \cdot ksi\right) \cdot b_v \cdot d_{cv}$

$$\phi V_c = 6.59\ kip$$

$$\text{if}\left(V_u < \phi V_c, \text{"OK"}, \text{"NG"}\right) = \text{"OK"}$$

Base Section Floor Slab Design:

Distribution of External Upward Pressure

$$m. := \text{if}\left(\frac{Span_W}{Span_L} < 0.5, 0, \text{Round}\left(\frac{Span_W}{Span_L}, 0.05\right)\right) \qquad m. = 0.80$$

If width to length ratio is less than 0.5 then design as one-way slab (m=0).

$$MC := \begin{array}{c} \begin{array}{ccc} m & C_A & C_B \end{array} \\ \begin{bmatrix} 1 & .036 & .036 \\ .95 & .040 & .033 \\ .9 & .045 & .029 \\ .85 & .050 & .026 \\ .8 & .056 & .023 \\ .75 & .061 & .019 \\ .7 & .068 & .016 \\ .65 & .074 & .013 \\ .6 & .081 & .010 \\ .55 & .088 & .008 \\ .5 & .095 & .006 \\ 0 & .125 & 0 \end{bmatrix} \end{array}$$

Moment Coefficients based on distribution Width/Length ratio, m.

← 0.125 = 1/8 (One-Way Case)

$$VC := \begin{array}{c} \begin{array}{ccc} m & W_A & W_B \end{array} \\ \begin{bmatrix} 1 & .50 & .50 \\ .95 & .55 & .45 \\ .9 & .60 & .40 \\ .85 & .66 & .34 \\ .8 & .71 & .29 \\ .75 & .76 & .24 \\ .7 & .81 & .19 \\ .65 & .85 & .15 \\ .6 & .89 & .11 \\ .55 & .92 & .08 \\ .5 & .94 & .06 \\ 0 & 1.0 & 0 \end{bmatrix} \end{array}$$

Shear Coefficients based on distribution Width/Length ratio, m.

$C_A := |\text{vlookup}(m., MC, 1)|$ $\quad C_A = 0.056$ Moment Coefficient, Short Direction

$C_B := |\text{vlookup}(m., MC, 2)|$ $\quad C_B = 0.023$ Moment Coefficient, Long Direction

$W_A := |\text{vlookup}(m., VC, 1)|$ $\quad W_A = 0.71$ Shear Coefficient, Short Direction

$W_B := |\text{vlookup}(m., VC, 2)|$ $\quad W_B = 0.29$ Shear Coefficient, Long Direction

Precast Concrete Box Design

Combination of Loads — Worst Case - structure empty with full LL+ Impact

Structure Volume:

$$Vol := h \cdot (W + 2 \cdot T_{wb}) \cdot (L + 2 \cdot T_{wb}) - h \cdot W \cdot L + T_b \cdot (W + 2 \cdot T_{wb}) \cdot (L + 2 \cdot T_{wb}) + T_t \cdot (W + 2 \cdot T_{wb}) \cdot (L + 2 \cdot T_{wb})$$

Structure Volume..... $Vol = 120\ ft^3$

Self Weight Bearing Pressure..... $w_{sw} := \dfrac{Vol \cdot w_c}{(L + 2 \cdot T_{wb}) \cdot (W + 2 \cdot T_{wb})}$ $\quad w_{sw} = 0.9\ ksf$

Earth Load Bearing Pressure..... $w_{EV} := \gamma_s \cdot h_f = 0\ ksf$

Live Load Bearing Pressure..... $w_{LL} := LL \cdot \dfrac{IM_{dt}}{(L + 2 \cdot T_{wb}) \cdot (W + 2 \cdot T_{wb})} = 1.06\ ksf$

Total Load On Base Floor Slab (Factored)..... $w_{u.base} := DLF \cdot w_{sw} + SLF_v \cdot w_{EV} + LLF \cdot w_{LL} = 3.36\ ksf$

Base Floor Slab Moment Analysis and Required Flexural Reinforcement (Short Direction)

Moment at Midspan Short Direction..... $M_{u.s} := C_A \cdot w_{u.base} \cdot Span_W{}^2 \cdot b$ $\quad M_{u.s} = 2.3\ kip \cdot ft$

Steel Area Required..... $A_{sbs} := \left(1 - \left(\sqrt{1 - \dfrac{2 \cdot M_{u.s}}{\phi_f \cdot b \cdot (d_{bs})^2 \cdot 0.85 \cdot f'_c}}\right)\right) \cdot \dfrac{0.85 \cdot f'_c \cdot b \cdot d_{bs}}{f_y}$

Area of Reinforcing, Short Direction..... $A_{sbs} = 0.14\ in^2$

Check Minimum Required Reinforcement Base Floor Slab Short Direction (AASHTO LRFD Section 5.6.3.3)

Flexural Cracking Variability Factor..... $\gamma_1 := 1.6$

Ratio of Yield Strength to Ultimate Tensile Strength..... $\gamma_3 := 0.67$

Half of Base Slab Section Thickness..... $c_{nc} := \dfrac{T_b}{2} = 3\ in$

Concrete Density Modification Factor..... $\lambda := 1.0$

Modulus of Rupture of Concrete..... $f_r := 0.24 \cdot \lambda \cdot \left(f'_c \cdot \left(\dfrac{in^2}{kip}\right)\right)^{0.5} \cdot ksi = 0.537\ ksi$

Section Modulus, Non-Composite Section..... $S_{nc} := \dfrac{I_{g.base}}{c_{nc}} = 72\ in^3$

Cracking Moment..... $M_{cr} := \gamma_3 \cdot (\gamma_1 \cdot f_r) \cdot S_{nc} = 3.45\ kip \cdot ft$

Alternate Moment for Min. Reinf. Consideration..... $M_{u.min} := 1.33 \cdot M_{u.s} = 3.07\ kip \cdot ft$

Controlling Moment for Min. Reinf. Evaluation..... $M_{u.min} := \text{if}(M_{cr} \le M_{u.min}, M_{cr}, M_{u.min})$

$M_{u.min} = 3.07\ kip \cdot ft$

Min. Req'd Steel Area Base Floor Slab (Short Direction):

$$A_{s.min} := \left(1 - \left(\sqrt{1 - \frac{2 \cdot M_{u.min}}{\phi_f \cdot b \cdot (d_{bs})^2 \cdot 0.85 \cdot f'_c}}\right)\right) \cdot \frac{0.85 \cdot f'_c \cdot b \cdot d_{bs}}{f_y}$$

$$A_{s.min} = 0.18\ in^2$$

$$A_{sbs} := \text{if}\left(A_{sbs} > A_{s.min}, A_{sbs}, A_{s.min}\right)$$

Req'd Steel Area Base Floor Slab (Short Direction)..... $A_{sbs} = 0.18\ \boldsymbol{in}^2$

<u>Check Required Shrinkage and Temperature Reinf. Base Floor Slab Short Direction (AASHTO LRFD Section 5.10.6)</u>

$$A_{s.temp'} := \frac{1.3 \cdot b \cdot T_b}{2 \cdot (b + T_b) \cdot f_y \cdot \left(\frac{\boldsymbol{in}}{\boldsymbol{kip}}\right)} = 0.04\ \boldsymbol{in}^2$$

$$A_{s.temp} := \left\| \begin{array}{l} \text{if } A_{s.temp'} \le 0.11\ \boldsymbol{in}^2 \\ \quad \| \ 0.11\ \boldsymbol{in}^2 \\ \text{also if } 0.11\ \boldsymbol{in}^2 < A_{s.temp'} < 0.60\ \boldsymbol{in}^2 \\ \quad \| \ (A_{s.temp'}) \\ \text{else} \\ \quad \| \ 0.60\ \boldsymbol{in}^2 \end{array} \right\|$$

$$A_{s.temp} = 0.11\ \boldsymbol{in}^2$$

$$A_{sbs} := \text{if}\left(A_{sbs} > A_{s.temp}, A_{sbs}, A_{s.temp}\right)$$

Req'd Steel Area Base Floor Slab (Short Direction)..... $A_{sbs} = 0.18\ \boldsymbol{in}^2$

<u>Check Steel Provided for Base Floor Slab (Short Direction) :</u>

Bar Diameter..... $Db_{bs} = 0.375\ \boldsymbol{in}$

Bar Spacing..... $spacing_s := 6 \cdot \boldsymbol{in}$

Bar Area..... $A_{bar} := \pi \cdot \frac{Db_{bs}^2}{4} = 0.11\ in^2$ $\quad A_{bar} := \text{Round}\left(A_{bar}, .01 \cdot \boldsymbol{in}^2\right) = 0.11\ in^2$

Area Provided w/ Spacing..... $A_{s.prov.s} := \frac{A_{bar} \cdot 1 \cdot \boldsymbol{ft}}{spacing_s} = 0.22\ in^2$

Required Steel Area..... $A_{sbs} = 0.18\ in^2$

$$\text{if}\left(A_{sbs} \le A_{s.prov.s}, \text{"OK"}, \text{"NG"}\right) = \text{"OK"}$$

Check Steel Reinforcement Yield for Flexure (Base Floor Slab Short Direction) AASHTO LRFD 5.6.2.1:

Depth of Equivalent Rectangular Stress Block.... $a := \frac{A_{s.prov.s} \cdot f_y}{0.85 \cdot f'_c \cdot b} = 0.26\ in$

Distance to Neutral Axis..... $c := \frac{a}{\beta_1} = 0.32\ in$

Distance to the Centroid of Tensile Reinf..... $d_s := d_{bs} = 3.81\ in$

Strain Limit for Tensile Reinf. (Table C5.6.2.1-1)..... $\varepsilon_{cl} := .002$

Check that Tensile Reinforcement has Yielded..... $Check_1 := \frac{c}{d_s} = 0.085$

$Check_2 := \frac{.003}{.003 + \varepsilon_{cl}} = 0.6$

$Verify := \text{if}\left(Check_1 \le Check_2, \text{"Tension Control"}, \text{"Not Tension Control""}\right) = \text{"Tension Control"}$

Steel Yields, Assumption Phi (Flexure=0.90) is OK

Check Crack Control for Base Floor Slab Steel (Short Direction)

Total Service Load On Bottom Slab..... $w_{s.s} := w_{sw} + w_{EV} + w_{LL}$ $w_{s.s} = 1.96\ ksf$

Service Moment at Midspan..... $M_{s.s} := C_A \cdot w_{s.s} \cdot Span_W^{\ 2} \cdot b$ $M_{s.s} = 1.35\ kip \cdot ft$

Depth to centroid of slab reinforcing..... $d := d_{bs}$ $d = 3.81\ in$

Concrete cover from extreme tension fiber to center of flexural reinforcement..... $d_{c.cvr} := C_b + \left(0.5 \cdot Db_{bs}\right) = 2.19\ in$

Modular ratio..... $n := E_s \div E_c$ $n = 6.3$

Reinforcement ratio..... $\rho := \frac{A_{s.prov.s}}{b \cdot d}$ $\rho = 0.00481$

Compression factors: $k := \sqrt{2 \cdot \rho \cdot n + (\rho \cdot n)^2} - \rho \cdot n$ $k = 0.218$

$j := 1 - k \div 3$ $j = 0.927$

Service tensile force in steel..... $T_{s.s} := \frac{M_{s.s}}{j \cdot d}$ $T_{s.s} = 4.57\ kip$

Service tensile stress in steel..... $f_{s.s} := \frac{T_{s.s}}{A_{s.prov.s}}$ $f_{s.s} = 20.79\ ksi$

Calculate Beta S ..... $\beta_s := 1 + \frac{d_{c.cvr}}{0.7 \cdot \left(T_b - d_{c.cvr}\right)}$ $\beta_s = 1.82$

AASHTO LRFD Equation 5.6.7-2

Max spacing reinforcement ..... $s_{max.s} := \left(\frac{700 \cdot \gamma_e \cdot in}{\beta_s \cdot \frac{f_{s.s}}{ksi}}\right) - 2 \cdot d_{c.cvr} = 11.9\ in$

AASHTO LRFD Equation 5.6.7-1

$s_{max.s} := min\left(1.5 \cdot T_b, s_{max.s}, 18\ in\right) = 9\ in$

Check steel spacing for crack control.... $check_s := \text{if}\left(spacing_s \le \left|s_{max.s}\right|, \text{"OK"}, \text{"NG"}\right)$ $check_s = \text{"OK"}$

Base Floor Slab Shear Analysis and Check (Short Direction):

Determine Effective Shear Depth..... $M_n := A_{s.prov.s} \cdot f_y \cdot \left(d_{bs} - \frac{a}{2}\right) = 4.05\ kip \cdot ft$

$d_{bsv'} := \frac{M_n}{A_{s.prov.s} \cdot f_y} = 3.68\ in$

$d_{e1} := 0.9 \cdot d_{bs} = 3.43\ in$

$d_{e2} := 0.72 \cdot T_b = 4.32\ in$

$d_e := \text{if}\left(d_{e1} \geq d_{e2}, d_{e1}, d_{e2}\right) = 4.32\ in$

$d_{bsv} := \text{if}\left(d_{bsv'} > d_e, d_{bsv'}, d_e\right) = 4.32\ in$

Shear Load, Short Direction..... $V_{u.s} := W_A \cdot w_{u.base} \cdot \left(\frac{W}{2} - d_{bsv}\right) \cdot b \qquad V_{u.s} = 2.72\ kip$

Shear Capacity in Short Direction..... $\phi V_{c.s.base} := \phi_v \cdot 0.0316 \cdot \beta \cdot \left(\sqrt{\frac{f'_c}{ksi}} \cdot ksi\right) \cdot b_v \cdot d_{bsv}$

$\phi V_{c.s.base} = 6.59\ kip$

$\text{if}\left(V_{u.s} < \phi V_{c.s.base}, \text{"OK"}, \text{"NG"}\right) = \text{"OK"}$

Base Floor Slab Moment Analysis and Required Flexural Reinforcement (Long Direction)

Moment at Midspan Long Direction..... $M_{u.l} := C_B \cdot w_{u.base} \cdot Span_L{}^2 \cdot b \qquad M_{u.l} = 1.56\ kip \cdot ft$

Ratio of Reinforcement to Concrete..... $A_{sbl} := \left(1 - \left(\sqrt{1 - \frac{2 \cdot M_{u.l}}{\phi_f \cdot b \cdot (d_{bl})^2 \cdot 0.85 \cdot f'_c}}\right)\right) \cdot \frac{0.85 \cdot f'_c \cdot b \cdot d_{bl}}{f_y}$

Area of Reinforcing, Long Direction..... $A_{sbl} = 0.1\ in^2$

Check Minimum Required Reinforcement Base Floor Slab Long Direction (AASHTO LRFD Section 5.6.3.3)

Flexural Cracking Variability Factor..... $\gamma_1 := 1.6$

Ratio of Yield Strength to Ultimate Tensile Strength..... $\gamma_3 := 0.67$

Half of Base Slab Section Thickness..... $c_{nc} := \frac{T_b}{2} = 3\ in$

Concrete Density Modification Factor..... $\lambda := 1.0$

Modulus of Rupture of Concrete..... $f_r := 0.24 \cdot \lambda \cdot \left(f'_c \cdot \left(\frac{in^2}{kip}\right)\right)^{0.5} \cdot ksi = 0.537\ ksi$

Section Modulus, Non-Composite Section..... $S_{nc} := \frac{I_{g.base}}{c_{nc}} = 72\ in^3$

Cracking Moment..... $M_{cr} := \gamma_3 \cdot (\gamma_1 \cdot f_r) \cdot S_{nc} = 3.45\ kip \cdot ft$

Alternate Moment for Min. Reinf. Consideration..... $M_{u.min} := 1.33 \cdot M_{u.l} = 2.08\ kip \cdot ft$

Controlling Moment for Min. Reinf. Evaluation..... $M_{u.min} := \text{if}\left(M_{cr} \le M_{u.min}, M_{cr}, M_{u.min}\right)$

$M_{u.min} = 2.08\ kip \cdot ft$

Min. Req'd Steel Area Base Floor Slab (Long Direction):

$$A_{s.min} := \left(1 - \left(\sqrt{1 - \frac{2 \cdot M_{u.min}}{\phi_f \cdot b \cdot (d_{bl})^2 \cdot 0.85 \cdot f'_c}}\right)\right) \cdot \frac{0.85 \cdot f'_c \cdot b \cdot d_{bl}}{f_y}$$

$A_{s.min} = 0.14\ in^2$

$A_{sbl} := \text{if}\left(A_{sbl} > A_{s.min}, A_{sbl}, A_{s.min}\right)$

Req'd Steel Area Base Slab (Long Direction)..... $A_{sbl} = 0.14\ in^2$

Check Required Shrinkage and Temperature Reinf. Base Floor Slab Long Direction (AASHTO LRFD Section 5.10.6)

$$A_{s.temp'} := \frac{1.3 \cdot b \cdot T_b}{2 \cdot (b + T_b) \cdot f_y \cdot \left(\frac{in}{kip}\right)} = 0.04\ in^2$$

$$A_{s.temp} := \left\| \begin{array}{l} \text{if } A_{s.temp'} \le 0.11\ in^2 \\ \quad \| \ 0.11\ in^2 \\ \text{also if } 0.11\ in^2 < A_{s.temp'} < 0.60\ in^2 \\ \quad \| \ (A_{s.temp'}) \\ \text{else} \\ \quad \| \ 0.60\ in^2 \end{array} \right\|$$

$A_{s.temp} = 0.11\ in^2$

$A_{sbl} := \text{if}\left(A_{sbl} > A_{s.temp}, A_{sbl}, A_{s.temp}\right)$

Req'd Steel Area Base Slab (Long Direction)..... $A_{sbl} = 0.14\ in^2$

Check Steel Provided for Base Floor Slab (Long Direction) :

Bar Diameter..... $Db_{bl} = 0.375\ in$

Bar Spacing..... $spacing_l := 6 \cdot in$

Bar Area..... $A_{bar} := \pi \cdot \frac{Db_{bl}^2}{4} = 0.11\ in^2$ $A_{bar} := \text{Round}\left(A_{bar}, .01 \cdot in^2\right) = 0.11\ in^2$

Area Provided w/ Spacing..... $A_{s.prov.l} := \frac{A_{bar} \cdot 1 \cdot ft}{spacing_l} = 0.22\ in^2$

Required Steel Area..... $A_{sbl} = 0.14\ in^2$

$\text{if}\left(A_{sbl} \le A_{s.prov.l}, \text{"OK"}, \text{"NG"}\right) = \text{"OK"}$

Check Steel Reinforcement Yield for Flexure (Base Floor Slab Long Direction) AASHTO LRFD 5.6.2.1:

Depth of Equivalent Rectangular Stress Block.... $a := \frac{A_{s.prov.l} \cdot f_y}{0.85 \cdot f'_c \cdot b} = 0.26\ in$

Distance to Neutral Axis..... $c := \frac{a}{\beta_1} = 0.32\ in$

Distance to the Centroid of Tensile Reinf..... $d_s := d_{bl} = 3.44\ in$

Strain Limit for Tensile Reinf. (Table C5.6.2.1-1)..... $\varepsilon_{cl} := .002$

Check that Tensile Reinforcement has Yielded..... $Check_1 := \frac{c}{d_s} = 0.094$

$Check_2 := \frac{.003}{.003 + \varepsilon_{cl}} = 0.6$

$Verify := \text{if}\left(Check_1 \le Check_2, \text{"Tension Control"}, \text{"Not Tension Control""}\right) = \text{"Tension Control"}$

Steel Yields, Assumption Phi (Flexure=0.90) is OK

Check Crack Control for Base Floor Slab Steel (Long Direction)

Total Service Load On Bottom Slab..... $w_{s.l} := w_{sw} + w_{EV} + w_{LL}$ $w_{s.l} = 1.96\ ksf$

Service Moment at Midspan..... $M_{s.l} := C_B \cdot w_{s.l} \cdot Span_L^{\ 2} \cdot b$ $M_{s.l} = 0.91\ kip \cdot ft$

Depth to centroid of slab reinforcing..... $d := d_{bl}$ $d = 3.44\ in$

Concrete cover from extreme tension fiber to center of flexural reinforcement..... $d_{c.cvr} := C_b + \left(Db_{bs} + 0.5 \cdot Db_{bl}\right) = 2.56\ in$

Modular ratio..... $n := E_s \div E_c$ $n = 6.3$

Reinforcement ratio..... $\rho := \frac{A_{s.prov.l}}{b \cdot d}$ $\rho = 0.00533$

Compression factors: $k := \sqrt{2 \cdot \rho \cdot n + (\rho \cdot n)^2} - \rho \cdot n$ $k = 0.228$

$j := 1 - k \div 3$ $j = 0.924$

Service tensile force in steel..... $T_{s.l} := \frac{M_{s.l}}{j \cdot d}$ $T_{s.l} = 3.46\ kip$

Service tensile stress in steel..... $f_{s.l} := \frac{T_{s.l}}{A_{s.prov.l}}$ $f_{s.l} = 15.71\ ksi$

Calculate Beta S..... $\beta_s := 1 + \frac{d_{c.cvr}}{0.7 \cdot \left(T_b - d_{c.cvr}\right)}$ $\beta_s = 2.065$

AASHTO LRFD Equation 5.6.7-2

Max spacing reinforcement ..... $s_{max.l} := \left(\frac{700 \cdot \gamma_e \cdot in}{\beta_s \cdot \frac{f_{s.l}}{ksi}}\right) - 2 \cdot d_{c.cvr} = 13.9\ in$

AASHTO LRFD Equation 5.6.7-1

$s_{max.l} := min\left(1.5 \cdot T_b, s_{max.l}, 18\ in\right) = 9\ in$

Check steel spacing for crack control.... $check_l := \text{if}\left(spacing_l \le \left|s_{max.l}\right|, \text{"OK"}, \text{"NG"}\right)$ $check_l = \text{"OK"}$

Base Floor Slab Shear Analysis and Check (Long Direction):

Determine Effective Shear Depth.....

$$M_n := A_{s.prov.l} \cdot f_y \cdot \left(d_{bl} - \frac{a}{2}\right) = 3.64\ kip \cdot ft$$

$$d_{blv'} := \frac{M_n}{A_{s.prov.l} \cdot f_y} = 3.31\ in$$

$$d_{e1} := 0.9 \cdot d_{bl} = 3.09\ in$$

$$d_{e2} := 0.72 \cdot T_b = 4.32\ in$$

$$d_e := \text{if}\left(d_{e1} \geq d_{e2}, d_{e1}, d_{e2}\right) = 4.32\ in$$

$$d_{blv} := \text{if}\left(d_{blv'} > d_e, d_{blv'}, d_e\right) = 4.32\ in$$

Shear Load, Long Direction.....

$$V_{u.l} := W_B \cdot w_{u.base} \cdot \left(\frac{L}{2} - d_{blv}\right) \cdot b \qquad V_{u.l} = 1.6\ kip$$

Shear Capacity Long Direction .....

$$\phi V_{c.l.base} := \phi_v \cdot 0.0316 \cdot \beta \cdot \left(\sqrt{\frac{f'_c}{ksi}} \cdot ksi\right) \cdot b_v \cdot d_{blv}$$

$$\phi V_{c.l.base} = 6.59\ kip$$

$$\text{if}\left(V_{u.l} < \phi V_{c.l.base}, \text{"OK"}, \text{"NG"}\right) = \text{"OK"}$$

Determine Required Splice Length of Wall WWR with Projecting Base Bars:

Base slab bars are #3 bars long and short direction. Project base slab bars (each way) into walls for a distance equal to 1'-0" above the top of the base slab. Splice WWR in walls with the base slab bars for a minimum distance of (1.3 times the WWR's basic development length) or (8 inches) per AASHTO LRFD 5.10.8.5.1. For these calculations use fy=70 ksi for the WWR in the walls.

$$f_{y.mesh} := 70\ ksi \qquad f'_c = 5\ ksi \qquad \lambda = 1$$

$$Db_{wv} = 0.309\ in$$

$$s_w := spacing_v \qquad s_w = 3\ in$$

$$A_w := \frac{\pi \cdot Db_{wv}^2}{4} \qquad A_w := \text{Round}\left(A_w, .01 \cdot in^2\right) = 0.07\ in^2$$

$$l_{hd1} := 0.95 \cdot Db_{wv} \cdot \frac{\left(f_{y.mesh} - 20 \cdot ksi\right)}{\lambda \cdot \left(f'_c \cdot \left(\frac{in^2}{kip}\right)\right)^{0.5} \cdot ksi} = 6.56\ in$$

AASHTO LRFD Equation (5.10.8.2.5a-1)

$$l_{hd2} := \frac{6.3 \cdot A_w \cdot f_{y.mesh} \cdot \frac{in^2}{kip}}{s_w \cdot \lambda \cdot \left(f'_c \cdot \left(\frac{in^2}{kip}\right)\right)^{0.5}} = 4.6\ in$$

AASHTO LRFD Equation (5.10.8.2.5a-2)

$$l_{hd} := \text{if}\left(l_{hd1} \geq l_{hd2}, l_{hd1}, l_{hd2}\right) = 6.56\ in$$

$$Splice_1 := 1.3 \cdot l_{hd} = 8.53\ in \qquad Splice_2 := 8.0\ in$$

$$Splice_{reqd} := \text{if}\left(Splice_1 \geq Splice_2, Splice_1, Splice_2\right) = 8.53\ in$$

Required minimum splice length for WWR in the walls with the projecting base slab bars.

Reference attached drawings, minimum splice length provided is 14 inches which is greater than the required 8 1/2 inch minimum, therefore OK.

Design of Riser Walls:

Loading - Walls of Riser Section - External Lateral Pressure

Lateral Live Load Surcharge (LS)

Depth to bottom of section..... $H_b := H - T_b - h_{bb} = 8.5\ ft$

Equivalent Height of Soil..... $h_{eq} := 4.0\ ft$

AASHTO LRFD Table 3.11.6.4-1

$LS := k_a \cdot \gamma_s \cdot h_{eq}$

Lateral Earth Surcharge from LL..... $LS = 0.143\ ksf$ Service Load

Lateral Earth Pressure (EH) Loading above section (Service Load):

$$EH_{abv} := (H - T_b - h_{bb} - h_r - H_{wt}) \cdot (\gamma_{eq}) + H_{wt} \cdot \gamma_s \cdot k_a$$

Total Loading above section (Service Load):

$w_{as} := LS + EH_{abv}$

$w_{as} = 0.501\ ksf$

Lateral Earth Pressure (EH) Loading directly on section (Service Load):

$EH_{dir} := h_r \cdot \gamma_{eq}$

$EH_{dir} = 0.318\ ksf$ Note: $w_{bs} := EH_{dir}$

Total Loading (Service):

$$w_{svc.r} := \left(w_{as} + \frac{w_{bs}}{2}\right) \cdot b = 0.66\ klf$$

Total Loading (Factored):

$w_{a.r} := (LS \cdot LLF_h) + (EH_{abv} \cdot SLF_h) = 0.813\ ksf$

$w_{b.r} := (EH_{dir} \cdot SLF_h) = 0.501\ ksf$

$$w_{u.r} := \left(w_{a.r} + \frac{w_{b.r}}{2}\right) \cdot b = 1.064\ klf$$

Bending Moment Analysis Horizontal Loading (Riser Section Walls)

Moment In Corners..... $Mcor_{u.r} := \frac{w_{u.r}}{12} \cdot \left(\frac{Span_L^{\ 3} + Span_W^{\ 3}}{Span_L + Span_W}\right) = 1.48\ kip \cdot ft$

Moment in Long Span..... $Mlong_{u.l.r} := \frac{w_{u.r} \cdot Span_L^{\ 2}}{8} - Mcor_{u.r} = 1.21\ kip \cdot ft$

Moment in Short Span..... $Mshort_{u.w.r} := \frac{w_{u.r} \cdot Span_W^{\ 2}}{8} - Mcor_{u.r} = 0.14\ kip \cdot ft$

Maximum Factored Moment..... $Mcor_{u.r} = 1.48\ kip \cdot ft$

Determine Required Circumferential Reinforcement (Riser Walls)

Steel Area Required..... $A_{srh} := \left(1 - \left(\sqrt{1 - \frac{2 \cdot Mcor_{u.r}}{\phi_f \cdot b \cdot (d_{wr})^2 \cdot 0.85 \cdot f'_c}}\right)\right) \cdot \frac{0.85 \cdot f'_c \cdot b \cdot d_{wr}}{f_y}$

Area of Flexural Reinforcing, Horizontal..... $A_{srh} = 0.11\ in^2$

Check Minimum Required Reinforcement Riser Walls Horizontal Direction (AASHTO LRFD Section 5.6.3.3)

Flexural Cracking Variability Factor..... $\gamma_1 := 1.6$

Ratio of Yield Strength to Ultimate Tensile Strength..... $\gamma_3 := 0.67$

Half of Wall Section Thickness..... $c_{nc} := \frac{T_{wb}}{2} = 3\ in$

Concrete Density Modification Factor..... $\lambda := 1.0$

Modulus of Rupture of Concrete..... $f_r := 0.24 \cdot \lambda \cdot \left(f'_c \cdot \left(\frac{in^2}{kip}\right)\right)^{0.5} \cdot ksi = 0.537\ ksi$

Section Modulus, Non-Composite Section..... $S_{nc} := \frac{I_{g.wall}}{c_{nc}} = 72\ in^3$

Cracking Moment..... $M_{cr} := \gamma_3 \cdot (\gamma_1 \cdot f_r) \cdot S_{nc} = 3.45\ kip \cdot ft$

Alternate Moment for Min. Reinf. Consideration..... $M_{u.min} := 1.33 \cdot Mcor_{u.r} = 1.97\ kip \cdot ft$

Controlling Moment for Min. Reinf. Evaluation..... $M_{u.min} := \text{if}(M_{cr} \le M_{u.min}, M_{cr}, M_{u.min})$

$M_{u.min} = 1.97\ kip \cdot ft$

Min. Req'd Steel Area Riser Walls (Horizontal Direction):

$$A_{s.min} := \left(1 - \left(\sqrt{1 - \frac{2 \cdot M_{u.min}}{\phi_f \cdot b \cdot (d_{wr})^2 \cdot 0.85 \cdot f'_c}}\right)\right) \cdot \frac{0.85 \cdot f'_c \cdot b \cdot d_{wr}}{f_y}$$

$A_{s.min} = 0.15\ in^2$

$A_{srh} := \text{if}(A_{srh} > A_{s.min}, A_{srh}, A_{s.min})$

Req'd Steel Area Riser Walls (Horizontal)..... $A_{srh} = 0.15\ in^2$

Check Required Shrinkage and Temperature Reinf. Riser Walls Horiz. Direction (AASHTO LRFD Section 5.10.6)

$A_{s.temp'} := \frac{1.3 \cdot b \cdot T_{wb}}{2 \cdot (b + T_{wb}) \cdot f_y \cdot \left(\frac{in}{kip}\right)} = 0.04\ in^2$

$A_{s.temp} :=$ if $A_{s.temp'} \le 0.11\ in^2$ $\quad 0.11\ in^2$ also if $0.11\ in^2 < A_{s.temp'} < 0.60\ in^2$ $\quad (A_{s.temp'})$ else $\quad 0.60\ in^2$

$A_{s.temp} = 0.11\ in^2$

$A_{srh} := \text{if}(A_{srh} > A_{s.temp}, A_{srh}, A_{s.temp})$

Req'd Steel Area Riser Walls (Horizontal)..... $A_{srh} = 0.15\ in^2$

Check Steel Provided Riser Walls Riser (Horizontal Direction):

Bar Diameter..... $Db_{wr} = 0.309\ in$

Steel Spacing..... $spacing_{hr} := 3 \cdot in$

Area of Steel..... $A_{bar} := \pi \cdot \frac{Db_{wr}^2}{4} = 0.075\ in^2$ $A_{bar} := \text{Round}\left(A_{bar}, .001 \cdot in^2\right) = 0.075\ in^2$

Area Provided with Spacing..... $A_{s.prov.hr} := \frac{A_{bar} \cdot 1 \cdot ft}{spacing_{hr}} = 0.30\ in^2$

Area Required..... $A_{srh} = 0.15\ in^2$ $\text{if}\left(A_{srh} \le A_{s.prov.hr}, \text{"OK"}, \text{"NG"}\right) = \text{"OK"}$

Check Steel Reinforcement Yield for Flexure (Riser Walls Horizontal Direction) AASHTO LRFD 5.6.2.1:

Depth of Equivalent Rectangular Stress Block.... $a := \frac{A_{s.prov.hr} \cdot f_y}{0.85 \cdot f'_c \cdot b} = 0.35\ in$

Distance to Neutral Axis..... $c := \frac{a}{\beta_1} = 0.44\ in$

Distance to the Centroid of Tensile Reinf..... $d_s := d_{wr} = 3\ in$

Strain Limit for Tensile Reinf. (Table C5.6.2.1-1)..... $\varepsilon_{cl} := .002$

Check that Tensile Reinforcement has Yielded..... $Check_1 := \frac{c}{d_s} = 0.147$

$Check_2 := \frac{.003}{.003 + \varepsilon_{cl}} = 0.6$

$Verify := \text{if}\left(Check_1 \le Check_2, \text{"Tension Control"}, \text{"Not Tension Control""}\right) = \text{"Tension Control"}$

Steel Yields, Assumption Phi (Flexure=0.90) is OK

Check Crack Control for Corner Wall Steel (Riser Section Wall Horizontal)

Service Moment In Corners..... $Mcor_{s.r} := \frac{w_{svc.r}}{12} \cdot \left(\frac{Span_L^3 + Span_W^3}{Span_L + Span_W}\right) = 0.92\ kip \cdot ft$

Depth to centroid of wall reinforcing..... $d := d_{wr}$ $d = 3.00\ in$

Concrete cover from extreme tension fiber to center of flexural reinforcement..... $d_{c.cvr} := C_{wr} + \left(0.5 \cdot Db_{wr}\right) = 3\ in$

Modular ratio..... $n := E_s \div E_c$ $n = 6.3$

Reinforcement ratio..... $\rho := \frac{A_{s.prov.hr}}{b \cdot d}$ $\rho = 0.00835$

Compression factors: $k := \sqrt{2 \cdot \rho \cdot n + (\rho \cdot n)^2} - \rho \cdot n$ $k = 0.276$

$j := 1 - k \div 3$ $j = 0.908$

Service tensile force in steel..... $T_{s.hr} := \frac{Mcor_{s.r}}{j \cdot d}$ $T_{s.hr} = 4.06\ kip$

Service tensile stress in steel..... $f_{s.hr} := \frac{T_{s.hr}}{A_{s.prov.hr}}$ $f_{s.hr} = 13.54\ ksi$

Calculate Beta S..... $\beta_s := 1 + \frac{d_{c.cvr}}{0.7 \cdot (T_{wb} - d_{c.cvr})}$ $\beta_s = 2.433$

AASHTO LRFD Equation 5.6.7-2

Max spacing reinforcement ..... $s_{max.hr} := \left(\frac{700 \cdot \gamma_e \cdot in}{\beta_s \cdot \frac{f_{s.hr}}{ksi}} \right) - 2 \cdot d_{c.cvr} = 12.7\ in$

AASHTO LRFD Equation 5.6.7-1

$s_{max.hr} := min(1.5 \cdot T_{wb}, s_{max.hr}, 18\ in) = 9\ in$

Check steel spacing for crack control.... $check_{hr} := \text{if}(spacing_{hr} \le |s_{max.hr}|, \text{"OK"}, \text{"NG"})$ $check_{hr} = \text{"OK"}$

Check Wall Shear Capacity Horizontal Loading (Riser Section Walls)

Determine Effective Shear Depth..... $M_n := A_{s.prov.hr} \cdot f_y \cdot \left(d_{wr} - \frac{a}{2} \right) = 4.23\ kip \cdot ft$

$d_{wrv'} := \frac{M_n}{A_{s.prov.hr} \cdot f_y} = 2.82\ in$

$d_{e1} := 0.9 \cdot d_{wr} = 2.7\ in$

$d_{e2} := 0.72 \cdot T_{wb} = 4.32\ in$

$d_e := \text{if}(d_{e1} \ge d_{e2}, d_{e1}, d_{e2}) = 4.32\ in$

$d_{wrv} := \text{if}(d_{wrv'} > d_e, d_{wrv'}, d_e) = 4.32\ in$

Max Shear Load On Riser Walls (Horizontal)..... $V_{u.r} := (w_{u.r}) \cdot \left(\frac{L}{2} - d_{wrv} \right)$ $V_{u.r} = 1.74\ kip$

$\phi V_{c.r} := \phi_v \cdot 0.0316 \cdot \beta \cdot \left(\sqrt{\frac{f'_c}{ksi}} \cdot ksi \right) \cdot b_v \cdot (d_{wrv})$

Shear Capacity, Riser Walls (Horizontal)..... $\phi V_{c.r} = 6.59\ kip$

$\text{if}(V_{u.r} < \phi V_{c.r}, \text{"OK"}, \text{"NG"}) = \text{"OK"}$

Determine Required Reinforcement (Riser Section Walls Verical Direction):

Note: Due to the fact that applied loading is carried by the horizontal reinforcement, vertical reinforcement for the riser walls is to be based on the required amount of shrinkage and temperature reinforcement.

Check Required Shrinkage and Temperature Reinf. Riser Walls Vert. Direction (AASHTO LRFD Section 5.10.6)

$A_{s.temp'} := \frac{1.3 \cdot b \cdot T_{wb}}{2 \cdot (b + T_{wb}) \cdot f_y \cdot \left(\frac{in}{kip} \right)} = 0.04\ in^2$

$A_{s.temp} := \begin{cases} \text{if } A_{s.temp'} \le 0.11\ in^2 \\ \quad 0.11\ in^2 \\ \text{also if } 0.11\ in^2 < A_{s.temp'} < 0.60\ in^2 \\ \quad (A_{s.temp'}) \\ \text{else} \\ \quad 0.60\ in^2 \end{cases}$

$A_{s.temp} = 0.11\ in^2$

Min. Req'd Steel Area (Riser Walls Vertical)..... $A_{srv} := A_{s.temp} = 0.11\ in^2$

Check Steel Provided Riser Walls Riser (Vertical Direction):

Bar Diameter..... $Db_{wvr} = 0.309\ in$

Steel Spacing..... $spacing_{vr} := 3 \cdot in$

Area of Steel..... $A_{bar} := \pi \cdot \frac{Db_{wvr}^{\ 2}}{4} = 0.075\ in^2$ $\quad A_{bar} := \mathrm{Round}\left(A_{bar}, .001 \cdot in^2\right) = 0.075\ in^2$

Area Provided with Spacing..... $A_{s.prov.vr} := \frac{A_{bar} \cdot 1 \cdot ft}{spacing_{vr}} = 0.30\ in^2$

Area Required..... $A_{srv} = 0.11\ in^2$ $\quad \mathrm{if}\left(A_{srv} \le A_{s.prov.vr}, \text{"OK"}, \text{"NG"}\right) = \text{"OK"}$

Design Summary:

Base Section Walls:

Base Wall Thickness..... $T_{wb} = 6\ in$

Horizontal Wall Steel
Area Required..... $A_{swh} = 0.22\ in^2$

Horizontal Steel Provided..... $A_{s.prov.h} = 0.30\ in^2$

$Db_w = 0.309\ in$ D7.5 bars $spacing_h = 3\ in$

Vertical Wall Steel
Area Required..... $A_{swv} = 0.11\ in^2$

Vertical Steel Provided..... $A_{s.prov.v} = 0.30\ in^2$

$Db_{wv} = 0.309\ in$ D7.5 bars $spacing_v = 3\ in$

Base Section Floor Slab:

Base Slab Thickness..... $T_b = 6\ in$

Base Steel Area Required
in Short Direction..... $A_{sbs} = 0.18\ in^2$

Short Direction Steel
Provided..... $A_{s.prov.s} = 0.22\ in^2$

$Db_{bs} = 0.375\ in$ #3 bars $spacing_s = 6\ in$

Base Steel Area Required
in Long Direction..... $A_{sbl} = 0.14\ in^2$

Long Direction Steel
Provided..... $A_{s.prov.l} = 0.22\ in^2$

$Db_{bl} = 0.375\ in$ #3 bars $spacing_l = 6\ in$

Riser Section Walls:

Riser Wall Thickness..... $T_{wb} = 6\ in$

Horizontal Wall Steel
Area Required..... $A_{srh} = 0.15\ in^2$

Horizontal Steel Provided..... $A_{s.prov.hr} = 0.30\ in^2$

$Db_{wr} = 0.309\ in$ D7.5 bars $spacing_{hr} = 3\ in$

Vertical Wall Steel
Area Required..... $A_{srv} = 0.11\ in^2$

Vertical Steel Provided..... $A_{s.prov.vr} = 0.30\ in^2$

$Db_{wvr} = 0.309\ in$ D7.5 bars $spacing_{vr} = 3\ in$

Notes:

(1) Horizontal wall reinf. (base section and riser) shall be continuous (fully developed) around corners.
(2) For square structures Long Direction and Short Direction are equal.

Project: TDOT Alternate Reinforcement for Precast Box Structures
Date: 12/17/21
Product: 96 in. x 36 in. Curb Inlets & Catch Basins (HL-93 Live Load)
Calculations By: DRH

Design Criteria:
- Top of wall at grade
- HL-93 Live Loading
- Water table at grade
- Base section walls are integral with base slab

References:
AASHTO LRFD Bridge Design Specification Eighth Edition, 2017

Material Properties and Assumptions:

Concrete Compressive Strength, 28 Days..... $f'_c := 5.0 \cdot ksi$

Correction Factor for Source of Aggregate..... $K_1 := 1.0$ AASHTO LRFD 5.4.2.4

Unit Weight, Concrete..... $w_c := 0.15 \cdot \frac{kip}{ft^3}$

Concrete Modulus of Elasticity..... $E_c := 120000 \cdot K_1 \cdot \left(\left(w_c \left(\frac{ft^3}{kip} \right) \right)^{2.0} \left(f'_c \cdot \left(\frac{in^2}{kip} \right) \right)^{0.33} \right) \cdot ksi = 4592.2\ ksi$
AASHTO LRFD Equation 5.4.2.4-1

Steel Yield for Rebar..... $f_y := 60 \cdot ksi$

Steel Modulus of Elasticity..... $E_s := 29000 \cdot ksi$

Exposure Factor, TDOT Structures Office Policy.... ... $\gamma_e := 0.88$ Corresponds to Crack Width 0.015 in. (See AASHTO LRFD C5.6.7)

Unit Weight, Soil..... $\gamma_s := 0.12 \cdot \frac{kip}{ft^3}$

Unit Weight, Water..... $\gamma_w := 0.0624 \cdot \frac{kip}{ft^3}$

Active Lateral Earth Pressure Coefficient, ka (AASHTO LRFD Reference 3.11.5.3)

Effective Angle of Internal Friction..... $\phi'_f := 30\ deg$

Friction Angle Between Fill and Wall..... $\delta := 0.67 \cdot \phi'_f = 20.1\ deg$

Angle of Fill to the Horizontal..... $\beta := 0\ deg$

Angle of Back Face of Wall to the Horizontal..... $\theta := 90\ deg$

$$\Gamma := \left(1 + \sqrt{\frac{\sin(\phi'_f + \delta) \cdot \sin(\phi'_f - \beta)}{\sin(\theta - \delta) \cdot \sin(\theta + \beta)}} \right)^2 = 2.69$$

$$k_a := \frac{\left(\sin(\theta + \phi'_f)\right)^2}{\Gamma \cdot \left(\sin(\theta)^2 \ \sin(\theta - \delta)\right)} = 0.3$$

Equivalent Fluid Density, Fully Saturated Soil..... $\gamma_{eq} := (\gamma_s - \gamma_w) \cdot k_a + \gamma_w = 0.0795\ \frac{kip}{ft^3}$

Live Load and Dynamic Load Allowance:

Live Load..... $LL := 32\ kip$ HL- 93 Axle Load

Dynamic Load Allowance..... $IM_{dt} := 1.33$

Load and Resistance Factors:

$\eta_D := 1.0$ Ductility Load Modifier, AASHTO LRFD 1.3.3

$\eta_{R_DL} := 1.0$ Redundancy Load Modifier, AASHTO LRFD 1.3.4, Dead Loads

$\eta_{R_LL} := 1.0$ Redundancy Load Modifier, AASHTO LRFD 1.3.4, Live Loads

$\eta_I := 1.0$ Importance Load Modifier, AASHTO LRFD 1.3.5

$\eta_{R_SL} := 1.05$ Redundancy Load Modifier, AASHTO LRFD 1.3.4 & 12.5.4, Soil Loads

$m := 1.2$ Multiple Presence Factor, AASHTO LRFD Table 3.6.1.1.2-1

$LLF_i := 1.75$ $LLF := m \cdot LLF_i \cdot \eta_D \cdot \eta_{R_LL} \cdot \eta_I = 2.10$ $LLF_h := LLF_i \cdot \eta_D \cdot \eta_{R_LL} \cdot \eta_I = 1.75$ Live Load Factor, AASHTO LRFD Table 3.4.1-1

$DLF_i := 1.25$ $DLF := DLF_i \cdot \eta_D \cdot \eta_{R_DL} \cdot \eta_I = 1.25$ Dead Load Factor, AASHTO LRFD Table 3.4.1-1 & Table 3.4.1-2

$SLF_{ih} := 1.5$ $SLF_h := SLF_{ih} \cdot \eta_D \cdot \eta_{R_SL} \cdot \eta_I = 1.58$ Soil Load Factor, AASHTO LRFD Table 3.4.1-1 & Table 3.4.1-2 (EH, Active)

$SLF_{iv} := 1.3$ $SLF_v := SLF_{iv} \cdot \eta_D \cdot \eta_{R_SL} \cdot \eta_I = 1.37$ Soil Load Factor, AASHTO LRFD Table 3.4.1-1 & Table 3.4.1-2 (EV)

$\phi_f := 0.90$ Resistance Factor-Flexure, AASHTO LRFD 5.5.4.2 (Assumed, Verify in Flexural Calcs.)

$\phi_v := 0.90$ Resistance Factor-Shear, AASHTO LRFD 5.5.4.2

$\beta := 2.0$ Shear Factor- AASHTO LRFD 5.7.3.4.1

$$\beta_{1'} := 0.85 - 0.05 \cdot \left(\frac{f'_c}{ksi} - 4\right) = 0.8 \qquad \beta_1 := \begin{cases} 0.65 & \text{if } \beta_{1'} \le 0.65 \\ \left(\beta_{1'}\right) & \text{also if } 0.65 < \beta_{1'} < 0.85 \\ 0.85 & \text{else} \end{cases} \qquad \beta_1 = 0.80$$

Precast Concrete Box Design

Product Data:

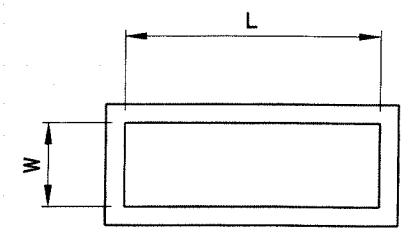

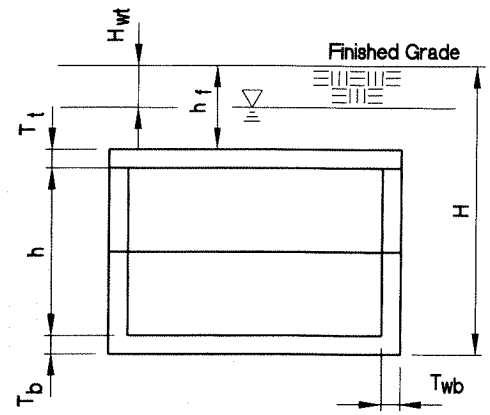

Width, Short Dimension..... $W := 3.00 \cdot ft$

Length, Long Dimension..... $L := 8.00 \cdot ft$

Top Slab Thickness..... $T_t := 10 \cdot in$

Bottom Slab Thickness..... $T_b := 6 \cdot in$

Base & Riser Wall Thickness..... $T_{wb} := 6 \cdot in$

Design Span Width..... $Span_W := W + T_{wb} = 3.50\ ft$

Design Span Length..... $Span_L := L + T_{wb} = 8.50\ ft$

Inside Total Height..... $h := 9 \cdot ft + 10 \cdot in$

Soil Fill Above Top Slab..... $h_f := 0.0 \cdot in$

Depth to Water Table..... $H_{wt} := 0 \cdot ft$

Design Beam Width, Flexure..... $b := 12 \cdot in$

Design Beam Width, Shear..... $b_v := 12\ in$

Design Strip Moment of Inertia..... $I_{g.wall} := \frac{b \cdot T_{wb}^3}{12} = 216\ in^4$ Base and Riser Walls

$I_{g.base} := \frac{b \cdot T_b^3}{12} = 216\ in^4$ Base Floor Slab

Depth to Bottom of Base Slab..... $H := h_f + T_t + h + T_b = 11.17\ ft$

Vertical Stack Geometry:

Height of Base Section..... $h_{bb} := 4 \cdot ft + 0 \cdot in$

Height of Bottom Riser Section..... $h_r := 4 \cdot ft + 0 \cdot in$

Height of Interm. Riser Sections..... $h_{r2} := 1 \cdot ft + 10 \cdot in$

Note: These dimensions used for design. Mfg. heights will vary.

Bar Diameters, Concrete Cover and Effective Depths:

Base Section Walls:

Base Wall Concrete Cover..... $C_w := 2.80 \cdot in$

Bar Diameter, Base Walls..... $Db_w := .391 \cdot in$ Horizontal Direction

$Db_{wv} := .391 \cdot in$ Vertical Direction,Cantilever

Horizontal Wall ds Dimension..... $d_w := T_{wb} - C_w - 0.5 \cdot Db_w = 3.00\ in$

Cantilever Wall ds Dimension..... $d_c := T_{wb} - C_w - (Db_w + 0.5 \cdot Db_{wv}) = 2.61\ in$

Base Section Floor Slab:

Base Floor Slab Concrete Cover..... $C_b := 2.0 \cdot in$

Bar Diameter, Base Floor Slab..... $Db_{bs} := .50 \cdot in$ Short Direction

$Db_{bl} := .50 \cdot in$ Long Direction

ds Dimension (Short Direction)..... $d_{bs} := T_b - C_b - 0.5 \cdot Db_{bs} = 3.75\ in$

ds Dimension (Long Direction)..... $d_{bl} := T_b - C_b - (Db_{bs} + 0.5 \cdot Db_{bl}) = 3.25\ in$

Riser Section Walls:

Riser Wall Concrete Cover..... $C_{wr} := 2.80 \cdot in$

Bar Diameter, Riser Walls..... $Db_{wr} := .391 \cdot in$ Horizontal Direction

$Db_{wvr} := .391 \cdot in$ Vertical Direction

Riser Horizontal Wall ds Dimension.... $d_{wr} := T_{wb} - C_{wr} - 0.5 \cdot Db_{wr} = 3.00\ in$

Riser Vertical Wall ds Dimension.... $d_{cr} := T_{wb} - C_{wr} - (Db_{wr} + 0.5 \cdot Db_{wvr}) = 2.61\ in$

Design of Base Section:

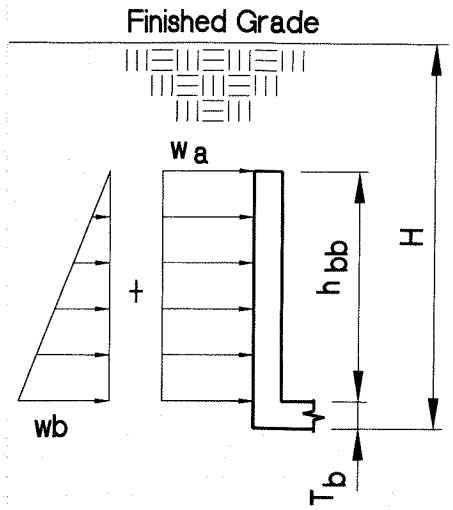

Loading - Walls of Base Section - External Lateral Pressure

Lateral Live Load Surcharge (LS)

Depth to bottom of section..... $H_b := H - T_b = 10.67\ ft$

Equivalent Height of Soil..... $h_{eq} := 4.0\ ft$
AASHTO LRFD Table 3.11.6.4-1

Lateral Earth Surcharge from LL... $LS := k_a \cdot \gamma_s \cdot h_{eq}$

$LS = 0.143\ ksf$ Service Load

Lateral Earth Pressure (EH) Loading above section (Service Load):

$$EH_{abv} := (H - T_b - h_{bb} - H_{wt}) \cdot (\gamma_{eq}) + H_{wt} \cdot \gamma_s \cdot k_a$$

Total Loading above section (Service Load):

$w_{as} := LS + EH_{abv}$

$w_{as} = 0.673\ ksf$

Lateral Earth Pressure (EH) Loading directly on section (Service Load):

$EH_{dir} := h_{bb} \cdot \gamma_{eq}$

$EH_{dir} = 0.318\ ksf$ Note: $w_{bs} := EH_{dir}$

Total Loading (Service):

$$w_{svc} := \left(w_{as} + \frac{w_{bs}}{2}\right) \cdot b = 0.832\ klf$$

Total Loading (Factored):

$w_a := (LS \cdot LLF_h) + (EH_{abv} \cdot SLF_h) = 1.085\ ksf$

$w_b := (EH_{dir} \cdot SLF_h) = 0.501\ ksf$

$$w_u := \left(w_a + \frac{w_b}{2}\right) \cdot b = 1.335\ klf$$

Analysis of Deflections, Base Section Walls--Fixed-End Condition:

Maximum Horizontal Deflection At Mid-Span..... $\Delta max_{horiz} := \frac{(w_{svc}) \cdot Span_L^{\ 4}}{384 \cdot E_c \cdot I_{g.wall}} = 0.0197\ in$

Maximum Deflection At Top of Base Wall..... $\Delta max_{cant} := \frac{(w_{as} \cdot b) \cdot h_{bb}^{\ 4}}{8 \cdot E_c \cdot I_{g.wall}} + \frac{(w_{bs} \cdot h_{bb} \cdot .50 \cdot b) \cdot h_{bb}^{\ 3}}{15 \cdot E_c \cdot I_{g.wall}} = 0.0422\ in$

Percent of Load Carried In Cantilever Direction..... $K_{cant} := \frac{\Delta max_{horiz}}{\Delta max_{horiz} + \Delta max_{cant}} = 0.32$

Percent of Load Carried In Horizontal Direction..... $K_{horiz} := 1 - K_{cant} = 0.68$

Bending Moment Analysis Horizontal Loading (Base Section Walls):

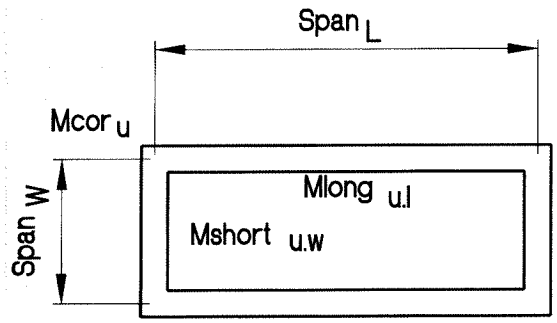

Moment In Corners..... $Mcor_u := K_{horiz} \cdot \frac{w_u}{12} \cdot \left(\frac{Span_L^{\ 3} + Span_W^{\ 3}}{Span_L + Span_W} \right) = 4.15\ \boldsymbol{kip \cdot ft}$

Moment in Long Span..... $Mlong_{u.l} := K_{horiz} \cdot \frac{(w_u) \cdot Span_L^{\ 2}}{8} - Mcor_u = 4.07\ \boldsymbol{kip \cdot ft}$

Moment in Short Span..... $Mshort_{u.w} := K_{horiz} \cdot \frac{(w_u) \cdot Span_W^{\ 2}}{8} - Mcor_u = -2.76\ \boldsymbol{kip \cdot ft}$

Maximum Factored Moment..... $Mcor_u = 4.15\ \boldsymbol{kip \cdot ft}$

Determine Required Circumferential Reinforcement (Base Section Walls):

Steel Area Required..... $A_{swh} := \left(1 - \left(\sqrt{1 - \frac{2 \cdot Mcor_u}{\phi_f \cdot b \cdot (d_w)^2 \cdot 0.85 \cdot f'_c}}\right)\right) \cdot \frac{0.85 \cdot f'_c \cdot b \cdot d_w}{f_y}$

Area of Flexural Reinforcing, ... $A_{swh} = 0.33\ \boldsymbol{in^2}$

Check Minimum Required Reinforcement Base Section Wall Horizontal Direction (AASHTO LRFD Section 5.6.3.3)

Flexural Cracking Variability Factor..... $\gamma_1 := 1.6$

Ratio of Yield Strength to Ultimate Tensile Strength..... $\gamma_3 := 0.67$

Half of Wall Section Thickness..... $c_{nc} := \frac{T_{wb}}{2} = 3\ \boldsymbol{in}$

Concrete Density Modification Factor..... $\lambda := 1.0$

Modulus of Rupture of Concrete..... $f_r := 0.24 \cdot \lambda \cdot \left(f'_c \cdot \left(\frac{in^2}{kip}\right)\right)^{0.5} \cdot ksi = 0.537\ ksi$

Section Modulus, Non-Composite Section..... $S_{nc} := \frac{I_{g.wall}}{c_{nc}} = 72\ in^3$

Cracking Moment..... $M_{cr} := \gamma_3 \cdot (\gamma_1 \cdot f_r) \cdot S_{nc} = 3.45\ kip \cdot ft$

Alternate Moment for Min. Reinf. Consideration..... $M_{u.min} := 1.33 \cdot Mcor_u = 5.53\ kip \cdot ft$

Controlling Moment for Min. Reinf. Evaluation..... $M_{u.min} := \text{if}\left(M_{cr} \le M_{u.min}, M_{cr}, M_{u.min}\right)$

$M_{u.min} = 3.45\ kip \cdot ft$

Min. Req'd Steel Area Base Walls (Horizontal):

$$A_{s.min} := \left(1 - \left(\sqrt{1 - \frac{2 \cdot M_{u.min}}{\phi_f \cdot b \cdot (d_w)^2 \cdot 0.85 \cdot f'_c}}\right)\right) \cdot \frac{0.85 \cdot f'_c \cdot b \cdot d_w}{f_y}$$

$A_{s.min} = 0.27\ in^2$

$A_{swh} := \text{if}\left(A_{swh} > A_{s.min}, A_{swh}, A_{s.min}\right)$

Req'd Steel Area Base Walls (Horizontal)..... $A_{swh} = 0.33\ in^2$

Check Required Shrinkage and Temperature Reinforcement (AASHTO LRFD Section 5.10.6)

$$A_{s.temp'} := \frac{1.3 \cdot b \cdot T_{wb}}{2 \cdot (b + T_{wb}) \cdot f_y \cdot \left(\frac{in}{kip}\right)} = 0.04\ in^2$$

$$A_{s.temp} := \begin{cases} 0.11\ in^2 & \text{if } A_{s.temp'} \le 0.11\ in^2 \\ \left(A_{s.temp'}\right) & \text{also if } 0.11\ in^2 < A_{s.temp'} < 0.60\ in^2 \\ 0.60\ in^2 & \text{else} \end{cases}$$

$A_{s.temp} = 0.11\ in^2$

$A_{swh} := \text{if}\left(A_{swh} > A_{s.temp}, A_{swh}, A_{s.temp}\right)$

Req'd Steel Area Base Walls (Horizontal)..... $A_{swh} = 0.33\ in^2$

Check Steel Provided (Walls Horizontal Base Section):

Bar Diameter..... $Db_w = 0.391\ in$

Steel Spacing..... $spacing_h := 3 \cdot in$

Area of Steel..... $A_{bar} := \pi \cdot \frac{Db_w^{\ 2}}{4} = 0.120\ in^2$ $A_{bar} := \text{Round}\left(A_{bar}, .001 \cdot in^2\right) = 0.12\ in^2$

Area Provided with Spacing..... $A_{s.prov.h} := \frac{A_{bar} \cdot 1 \cdot ft}{spacing_h} = 0.48\ in^2$

Area Required..... $A_{swh} = 0.33\ in^2$ $\text{if}\left(A_{swh} \le A_{s.prov.h}, \text{"OK"}, \text{"NG"}\right) = \text{"OK"}$

Check Steel Reinforcement Yield for Flexure (Walls Horizontal Base Section) AASHTO LRFD 5.6.2.1:

Depth of Equivalent Rectangular Stress Block.... $a := \frac{A_{s.prov.h} \cdot f_y}{0.85 \cdot f'_c \cdot b} = 0.56\ in$

Distance to Neutral Axis..... $c := \frac{a}{\beta_1} = 0.71\ in$

Distance to the Centroid of Tensile Reinf..... $d_s := d_w = 3\ in$

Strain Limit for Tensile Reinf. (Table C5.6.2.1-1)..... $\varepsilon_{cl} := .002$

Check that Tensile Reinforcement has Yielded..... $Check_1 := \frac{c}{d_s} = 0.235$

$Check_2 := \frac{.003}{.003 + \varepsilon_{cl}} = 0.6$

$Verify := \text{if}\left(Check_1 \le Check_2, \text{"Tension Control"}, \text{"Not Tension Control""}\right) = \text{"Tension Control"}$

Steel Yields, Assumption Phi (Flexure=0.90) is OK

Check Crack Control for Wall Steel (Base Section Wall Horizontal)

Service Moment In Corners..... $Mcor_s := K_{horiz} \cdot \frac{w_{svc}}{12} \cdot \left(\frac{Span_L^{\ 3} + Span_W^{\ 3}}{Span_L + Span_W}\right) = 2.59\ kip \cdot ft$

Depth to centroid of wall reinforcing..... $d := d_w$ $\quad d = 3.00\ in$

Concrete cover from extreme tension fiber to center of flexural reinforcement..... $d_{c.cvr} := C_w + \frac{Db_w}{2} = 3\ in$

Modular ratio..... $n := E_s \div E_c$ $\quad n = 6.3$

Reinforcement ratio..... $\rho := \frac{A_{s.prov.h}}{b \cdot d}$ $\quad \rho = 0.01331$

Compression factors: $k := \sqrt{2 \cdot \rho \cdot n + (\rho \cdot n)^2} - \rho \cdot n$ $\quad k = 0.335$

$j := 1 - k \div 3$ $\quad j = 0.888$

Service tensile force in steel..... $T_{s.h} := \frac{Mcor_s}{j \cdot d}$ $\quad T_{s.h} = 11.63\ kip$

Service tensile stress in steel..... $f_{s.h} := \frac{T_{s.h}}{A_{s.prov.h}}$ $\quad f_{s.h} = 24.24\ ksi$

Calculate Beta S..... $\beta_s := 1 + \frac{d_{c.cvr}}{0.7 \cdot (T_{wb} - d_{c.cvr})}$ $\quad \beta_s = 2.424$

AASHTO LRFD Equation 5.6.7-2

Max spacing reinforcement ..... $s_{max.h} := \left(\frac{700 \cdot \gamma_e \cdot in}{\beta_s \cdot \frac{f_{s.h}}{ksi}}\right) - 2 \cdot d_{c.cvr} = 4.5\ in$

AASHTO LRFD Equation 5.6.7-1

$s_{max.h} := min\left(1.5 \cdot T_{wb}, s_{max.h}, 18\ in\right) = 4.5\ in$

Check steel spacing for crack control..... $check_h := \text{if}\left(spacing_h \le \left|s_{max.h}\right|, \text{"OK"}, \text{"NG"}\right)$ $\quad check_h = \text{"OK"}$

Check Wall Shear Capacity Horizontal Loading (Base Section Walls)

Determine Effective Shear Depth..... $M_n := A_{s.prov.h} \cdot f_y \cdot \left(d_w - \frac{a}{2}\right) = 6.53\ kip \cdot ft$

$d_{wv'} := \frac{M_n}{A_{s.prov.h} \cdot f_y} = 2.72\ in$

$d_{e1} := 0.9 \cdot d_w = 2.7\ in$

$d_{e2} := 0.72 \cdot T_{wb} = 4.32\ in$

$d_e := \text{if}\left(d_{e1} \geq d_{e2}, d_{e1}, d_{e2}\right) = 4.32\ in$

$d_{wv} := \text{if}\left(d_{wv'} > d_e, d_{wv'}, d_e\right) = 4.32\ in$

Maximum Shear Load on Walls (Horizontal)..... $V_u := K_{horiz} \cdot (w_u) \cdot \left(\frac{L}{2} - d_{wv}\right)$ $V_u = 3.31\ kip$

Shear Capacity, Wall (Horizontal)..... $\phi V_c := \phi_v \cdot 0.0316 \cdot \beta \cdot \left(\sqrt{\frac{f'_c}{ksi}} \cdot ksi\right) \cdot b_v \cdot (d_{wv})$

$\phi V_c = 6.59\ kip$

$\text{if}\left(V_u < \phi V_c, \text{"OK"}, \text{"NG"}\right) = \text{"OK"}$

Design of Vertical Reinforcement (Base Section Wall Cantilever Direction)

Moment At Base of Wall..... $Mcant_u := K_{cant} \cdot \frac{w_a \cdot h_{bb}^2 \cdot b}{2} + K_{cant} \cdot \frac{w_b \cdot h_{bb}^2 \cdot b}{6} = 3.18\ kip \cdot ft$

Steel Area Required..... $A_{swv} := \left(1 - \left(\sqrt{1 - \frac{2 \cdot Mcant_u}{\phi_f \cdot b \cdot d_c^2 \cdot 0.85 \cdot f'_c}}\right)\right) \cdot \frac{0.85 \cdot f'_c \cdot b \cdot d_c}{f_y}$

Area Of Flexural Reinforcing,
Cantilever Direction (Walls Vertical)..... $A_{swv} = 0.29\ in^2$

Check Minimum Required Reinforcement Base Section Wall Cantilever Direction (AASHTO LRFD Section 5.6.3.3)

Flexural Cracking Variabilty Factor..... $\gamma_1 := 1.6$

Ratio of Yield Strength to Ultimate Tensile Strength..... $\gamma_3 := 0.67$

Half of Wall Section Thickness..... $c_{nc} := \frac{T_{wb}}{2} = 3\ in$

Concrete Density Modification Factor..... $\lambda := 1.0$

Modulus of Rupture of Concrete..... $f_r := 0.24 \cdot \lambda \cdot \left(f'_c \cdot \left(\frac{in^2}{kip}\right)\right)^{0.5} \cdot ksi = 0.537\ ksi$

Section Modulus, Non-Composite Section..... $S_{nc} := \frac{I_{g.wall}}{c_{nc}} = 72\ in^3$

Cracking Moment..... $M_{cr} := \gamma_3 \cdot (\gamma_1 \cdot f_r) \cdot S_{nc} = 3.45\ kip \cdot ft$

Alternate Moment for Min. Reinf. Consideration..... $M_{u.min} := 1.33 \cdot Mcant_u = 4.24\ kip \cdot ft$

Controlling Moment for Min. Reinf. Evaluation..... $M_{u.min} := \text{if}\left(M_{cr} \le M_{u.min}, M_{cr}, M_{u.min}\right)$

$M_{u.min} = 3.45\ kip \cdot ft$

Min. Req'd Steel Area Walls (Vertical):

$$A_{s.min} := \left(1 - \left(\sqrt{1 - \frac{2 \cdot M_{u.min}}{\phi_f \cdot b \cdot (d_c)^2 \cdot 0.85 \cdot f'_c}}\right)\right) \cdot \frac{0.85 \cdot f'_c \cdot b \cdot d_c}{f_y}$$

$A_{s.min} = 0.32\ in^2$

$A_{swv} := \text{if}\left(A_{swv} > A_{s.min}, A_{swv}, A_{s.min}\right)$

Req'd Steel Area Base Walls (Vertical)..... $A_{swv} = 0.32\ in^2$

Check Required Shrinkage and Temperature Reinforcement (AASHTO LRFD Section 5.10.6)

$$A_{s.temp'} := \frac{1.3 \cdot b \cdot T_{wb}}{2 \cdot (b + T_{wb}) \cdot f_y \cdot \left(\frac{in}{kip}\right)} = 0.04\ in^2$$

$$A_{s.temp} := \left\| \begin{array}{l} \text{if } A_{s.temp'} \le 0.11\ in^2 \\ \quad \| \ 0.11\ in^2 \\ \text{also if } 0.11\ in^2 < A_{s.temp'} < 0.60\ in^2 \\ \quad \| \ (A_{s.temp'}) \\ \text{else} \\ \quad \| \ 0.60\ in^2 \end{array} \right\|$$

$A_{s.temp} = 0.11\ in^2$

$A_{swv} := \text{if}\left(A_{swv} > A_{s.temp}, A_{swv}, A_{s.temp}\right)$

Req'd Steel Area Base Walls (Vertical)..... $A_{swv} = 0.32\ in^2$

Check Steel Provided (Walls Vertical Base Section):

Bar Diameter..... $Db_{wv} = 0.391\ in$

Steel Spacing..... $spacing_v := 3 \cdot in$

Area of Steel..... $A_{bar} := \pi \cdot \frac{Db_{wv}^2}{4} = 0.120\ in^2$ $\quad A_{bar} := \text{Round}\left(A_{bar}, .001 \cdot in^2\right) = 0.12\ in^2$

Area Provided with Spacing..... $A_{s.prov.v} := \frac{A_{bar} \cdot 1 \cdot ft}{spacing_v} = 0.48\ in^2$

Area Required..... $A_{swv} = 0.32\ in^2$ $\quad \text{if}\left(A_{swv} \le A_{s.prov.v}, \text{"OK"}, \text{"NG"}\right) = \text{"OK"}$

Check Steel Reinforcement Yield for Flexure (Walls Vertical Base Section) AASHTO LRFD 5.6.2.1:

Depth of Equivalent Rectangular Stress Block.... $a := \frac{A_{s.prov.v} \cdot f_y}{0.85 \cdot f'_c \cdot b} = 0.56\ in$

Distance to Neutral Axis..... $c := \frac{a}{\beta_1} = 0.71\ in$

Distance to the Centroid of Tensile Reinf..... $d_s := d_c = 2.61\ in$

Strain Limit for Tensile Reinf. (Table C5.6.2.1-1)..... $\varepsilon_{cl} := .002$

Check that Tensile Reinforcement has Yielded..... $Check_1 := \frac{c}{d_s} = 0.27$

$Check_2 := \frac{.003}{.003 + \varepsilon_{cl}} = 0.6$

$Verify := \text{if}\left(Check_1 \le Check_2, \text{"Tension Control"}, \text{"Not Tension Control""}\right) = \text{"Tension Control"}$

Steel Yields, Assumption Phi (Flexure=0.90) is OK

Check Crack Control for Vertical Wall Steel (Base Section)

Service Moment at base of wall..... $Mcant_s := K_{cant} \cdot \frac{w_{as} \cdot h_{bb}^2 \cdot b}{2} + K_{cant} \cdot \frac{w_{bs} \cdot h_{bb}^2 \cdot b}{6} = 1.98\ kip \cdot ft$

Depth to centroid of wall reinforcing..... $d := d_c$ $\quad d = 2.61\ in$

Concrete cover from extreme tension fiber to center of flexural reinforcement..... $d_{c.cvr} := C_w + \left(Db_w + 0.5 \cdot Db_{wv}\right) = 3.39\ in$

Modular ratio..... $n := E_s \div E_c$ $\quad n = 6.3$

Reinforcement ratio..... $\rho := \frac{A_{s.prov.v}}{b \cdot d}$ $\quad \rho = 0.01531$

Compression factors: $k := \sqrt{2 \cdot \rho \cdot n + (\rho \cdot n)^2} - \rho \cdot n$ $\quad k = 0.354$

$j := 1 - k \div 3$ $\quad j = 0.882$

Service tensile force in steel..... $T_{s.v} := \frac{Mcant_s}{j \cdot d}$ $\quad T_{s.v} = 10.32\ kip$

Service tensile stress in steel..... $f_{s.v} := \frac{T_{s.v}}{A_{s.prov.v}}$ $\quad f_{s.v} = 21.49\ ksi$

Calculate Beta S..... $\beta_s := 1 + \frac{d_{c.cvr}}{0.7 \cdot \left(T_{wb} - d_{c.cvr}\right)}$ $\quad \beta_s = 2.851$

AASHTO LRFD Equation 5.6.7-2

Max spacing reinforcement ..... $s_{max.v} := \left(\frac{700 \cdot \gamma_e \cdot in}{\beta_s \cdot \frac{f_{s.v}}{ksi}}\right) - 2 \cdot d_{c.cvr} = 3.3\ in$

AASHTO LRFD Equation 5.6.7-1

$s_{max.v} := min\left(1.5 \cdot T_{wb}, s_{max.v}, 18\ in\right) = 3.3\ in$

Check steel spacing for crack control..... $check_v := \text{if}\left(spacing_v \le \left|s_{max.v}\right|, \text{"OK"}, \text{"NG"}\right)$ $\quad check_v = \text{"OK"}$

Note: Accept 3 in. spacing as OK for this check.

Check Wall Shear Capacity Vertical Loading (Base Section Walls)

Determine Effective Shear Depth.....

$$M_n := A_{s.prov.v} \cdot f_y \cdot \left(d_c - \frac{a}{2}\right) = 5.59\ kip \cdot ft$$

$$d_{cv'} := \frac{M_n}{A_{s.prov.v} \cdot f_y} = 2.33\ in$$

$$d_{e1} := 0.9 \cdot d_c = 2.35\ in$$

$$d_{e2} := 0.72 \cdot T_{wb} = 4.32\ in$$

$$d_e := \text{if}\left(d_{e1} \geq d_{e2}, d_{e1}, d_{e2}\right) = 4.32\ in$$

$$d_{cv} := \text{if}\left(d_{cv'} > d_e, d_{cv'}, d_e\right) = 4.32\ in$$

Maximum Shear Load on Walls (Vertical)..... $V_u := K_{cant} \cdot (w_u) \cdot (h_{bb})$ $\quad V_u = 1.7\ kip$

Shear Capacity, Wall (Base of Cantilever)..... $\phi V_c := \phi_v \cdot 0.0316 \cdot \beta \cdot \left(\sqrt{\frac{f'_c}{ksi}} \cdot ksi\right) \cdot b_v \cdot d_{cv}$

$$\phi V_c = 6.59\ kip$$

$$\text{if}\left(V_u < \phi V_c, \text{"OK"}, \text{"NG"}\right) = \text{"OK"}$$

Base Section Floor Slab Design:

Distribution of External Upward Pressure

$$m. := \text{if}\left(\frac{Span_W}{Span_L} < 0.5, 0, \text{Round}\left(\frac{Span_W}{Span_L}, 0.05\right)\right) \qquad m. = 0.00$$

If width to length ratio is less than 0.5 then design as one-way slab (m=0).

$$MC := \begin{array}{c} \begin{array}{ccc} m & C_A & C_B \end{array} \\ \begin{bmatrix} 1 & .036 & .036 \\ .95 & .040 & .033 \\ .9 & .045 & .029 \\ .85 & .050 & .026 \\ .8 & .056 & .023 \\ .75 & .061 & .019 \\ .7 & .068 & .016 \\ .65 & .074 & .013 \\ .6 & .081 & .010 \\ .55 & .088 & .008 \\ .5 & .095 & .006 \\ 0 & .125 & 0 \end{bmatrix} \end{array}$$

Moment Coefficients based on distribution Width/Length ratio, m.

← 0.125 = 1/8 (One-Way Case)

$$VC := \begin{array}{c} \begin{array}{ccc} m & W_A & W_B \end{array} \\ \begin{bmatrix} 1 & .50 & .50 \\ .95 & .55 & .45 \\ .9 & .60 & .40 \\ .85 & .66 & .34 \\ .8 & .71 & .29 \\ .75 & .76 & .24 \\ .7 & .81 & .19 \\ .65 & .85 & .15 \\ .6 & .89 & .11 \\ .55 & .92 & .08 \\ .5 & .94 & .06 \\ 0 & 1.0 & 0 \end{bmatrix} \end{array}$$

Shear Coefficients based on distribution Width/Length ratio, m.

$C_A := |\text{vlookup}(m., MC, 1)|$ $\quad C_A = 0.125$ Moment Coefficient, Short Direction

$C_B := |\text{vlookup}(m., MC, 2)|$ $\quad C_B = 0.000$ Moment Coefficient, Long Direction

$W_A := |\text{vlookup}(m., VC, 1)|$ $\quad W_A = 1.00$ Shear Coefficient, Short Direction

$W_B := |\text{vlookup}(m., VC, 2)|$ $\quad W_B = 0.00$ Shear Coefficient, Long Direction

Precast Concrete Box Design

Combination of Loads — Worst Case - structure empty with full LL+ Impact

Structure Volume:

$$Vol := h \cdot (W + 2 \cdot T_{wb}) \cdot (L + 2 \cdot T_{wb}) - h \cdot W \cdot L + T_b \cdot (W + 2 \cdot T_{wb}) \cdot (L + 2 \cdot T_{wb}) + T_t \cdot (W + 2 \cdot T_{wb}) \cdot (L + 2 \cdot T_{wb})$$

Structure Volume..... $Vol = 166\ ft^3$

Self Weight Bearing Pressure..... $w_{sw} := \dfrac{Vol \cdot w_c}{(L + 2 \cdot T_{wb}) \cdot (W + 2 \cdot T_{wb})}$ $\quad w_{sw} = 0.69\ ksf$

Earth Load Bearing Pressure..... $w_{EV} := \gamma_s \cdot h_f = 0\ ksf$

Live Load Bearing Pressure..... $w_{LL} := LL \cdot \dfrac{IM_{dt}}{(L + 2 \cdot T_{wb}) \cdot (W + 2 \cdot T_{wb})} = 1.18\ ksf$

Total Load On Base Floor Slab (Factored)..... $w_{u.base} := DLF \cdot w_{sw} + SLF_v \cdot w_{EV} + LLF \cdot w_{LL} = 3.35\ ksf$

Base Floor Slab Moment Analysis and Required Flexural Reinforcement (Short Direction)

Moment at Midspan Short Direction..... $M_{u.s} := C_A \cdot w_{u.base} \cdot Span_W{}^2 \cdot b$ $\quad M_{u.s} = 5.13\ kip \cdot ft$

Steel Area Required..... $A_{sbs} := \left(1 - \left(\sqrt{1 - \dfrac{2 \cdot M_{u.s}}{\phi_f \cdot b \cdot (d_{bs})^2 \cdot 0.85 \cdot f'_c}}\right)\right) \cdot \dfrac{0.85 \cdot f'_c \cdot b \cdot d_{bs}}{f_y}$

Area of Reinforcing, Short Direction..... $A_{sbs} = 0.32\ in^2$

Check Minimum Required Reinforcement Base Floor Slab Short Direction (AASHTO LRFD Section 5.6.3.3)

Flexural Cracking Variability Factor..... $\gamma_1 := 1.6$

Ratio of Yield Strength to Ultimate Tensile Strength..... $\gamma_3 := 0.67$

Half of Base Slab Section Thickness..... $c_{nc} := \dfrac{T_b}{2} = 3\ in$

Concrete Density Modification Factor..... $\lambda := 1.0$

Modulus of Rupture of Concrete..... $f_r := 0.24 \cdot \lambda \cdot \left(f'_c \cdot \left(\dfrac{in^2}{kip}\right)\right)^{0.5} \cdot ksi = 0.537\ ksi$

Section Modulus, Non-Composite Section..... $S_{nc} := \dfrac{I_{g.base}}{c_{nc}} = 72\ in^3$

Cracking Moment..... $M_{cr} := \gamma_3 \cdot (\gamma_1 \cdot f_r) \cdot S_{nc} = 3.45\ kip \cdot ft$

Alternate Moment for Min. Reinf. Consideration..... $M_{u.min} := 1.33 \cdot M_{u.s} = 6.82\ kip \cdot ft$

Controlling Moment for Min. Reinf. Evaluation..... $M_{u.min} := \text{if}(M_{cr} \le M_{u.min}, M_{cr}, M_{u.min})$

$M_{u.min} = 3.45\ kip \cdot ft$

Min. Req'd Steel Area Base Floor Slab (Short Direction):

$$A_{s.min} := \left(1 - \left(\sqrt{1 - \frac{2 \cdot M_{u.min}}{\phi_f \cdot b \cdot (d_{bs})^2 \cdot 0.85 \cdot f'_c}}\right)\right) \cdot \frac{0.85 \cdot f'_c \cdot b \cdot d_{bs}}{f_y}$$

$$A_{s.min} = 0.21\ in^2$$

$$A_{sbs} := \text{if}\left(A_{sbs} > A_{s.min}, A_{sbs}, A_{s.min}\right)$$

Req'd Steel Area Base Floor Slab (Short Direction)..... $A_{sbs} = 0.32\ \boldsymbol{in}^2$

Check Required Shrinkage and Temperature Reinf. Base Floor Slab Short Direction (AASHTO LRFD Section 5.10.6)

$$A_{s.temp'} := \frac{1.3 \cdot b \cdot T_b}{2 \cdot (b + T_b) \cdot f_y \cdot \left(\frac{\boldsymbol{in}}{\boldsymbol{kip}}\right)} = 0.04\ \boldsymbol{in}^2$$

$$A_{s.temp} := \left\| \begin{array}{l} \text{if } A_{s.temp'} \le 0.11\ \boldsymbol{in}^2 \\ \quad \| \ 0.11\ \boldsymbol{in}^2 \\ \text{also if } 0.11\ \boldsymbol{in}^2 < A_{s.temp'} < 0.60\ \boldsymbol{in}^2 \\ \quad \| \ (A_{s.temp'}) \\ \text{else} \\ \quad \| \ 0.60\ \boldsymbol{in}^2 \end{array} \right\|$$

$$A_{s.temp} = 0.11\ \boldsymbol{in}^2$$

$$A_{sbs} := \text{if}\left(A_{sbs} > A_{s.temp}, A_{sbs}, A_{s.temp}\right)$$

Req'd Steel Area Base Floor Slab (Short Direction)..... $A_{sbs} = 0.32\ \boldsymbol{in}^2$

Check Steel Provided for Base Floor Slab (Short Direction) :

Bar Diameter..... $Db_{bs} = 0.5\ \boldsymbol{in}$

Bar Spacing..... $spacing_s := 6 \cdot \boldsymbol{in}$

Bar Area..... $A_{bar} := \pi \cdot \frac{Db_{bs}^2}{4} = 0.20\ in^2$ $\quad A_{bar} := \text{Round}\left(A_{bar}, .01 \cdot \boldsymbol{in}^2\right) = 0.20\ in^2$

Area Provided w/ Spacing..... $A_{s.prov.s} := \frac{A_{bar} \cdot 1 \cdot \boldsymbol{ft}}{spacing_s} = 0.40\ in^2$

Required Steel Area..... $A_{sbs} = 0.32\ in^2$

$$\text{if}\left(A_{sbs} \le A_{s.prov.s}, \text{"OK"}, \text{"NG"}\right) = \text{"OK"}$$

Check Steel Reinforcement Yield for Flexure (Base Floor Slab Short Direction) AASHTO LRFD 5.6.2.1:

Depth of Equivalent Rectangular Stress Block.... $a := \frac{A_{s.prov.s} \cdot f_y}{0.85 \cdot f'_c \cdot b} = 0.47\ in$

Distance to Neutral Axis..... $c := \frac{a}{\beta_1} = 0.59\ in$

Distance to the Centroid of Tensile Reinf..... $d_s := d_{bs} = 3.75\ in$

Strain Limit for Tensile Reinf. (Table C5.6.2.1-1)..... $\varepsilon_{cl} := .002$

Check that Tensile Reinforcement has Yielded..... $Check_1 := \frac{c}{d_s} = 0.157$

$Check_2 := \frac{.003}{.003 + \varepsilon_{cl}} = 0.6$

$Verify := \text{if}\left(Check_1 \le Check_2, \text{"Tension Control"}, \text{"Not Tension Control""}\right) = \text{"Tension Control"}$

Steel Yields, Assumption Phi (Flexure=0.90) is OK

Check Crack Control for Base Floor Slab Steel (Short Direction)

Total Service Load On Bottom Slab..... $w_{s.s} := w_{sw} + w_{EV} + w_{LL}$ $w_{s.s} = 1.87\ ksf$

Service Moment at Midspan..... $M_{s.s} := C_A \cdot w_{s.s} \cdot Span_W{}^2 \cdot b$ $M_{s.s} = 2.87\ kip \cdot ft$

Depth to centroid of slab reinforcing..... $d := d_{bs}$ $d = 3.75\ in$

Concrete cover from extreme tension fiber to center of flexural reinforcement..... $d_{c.cvr} := C_b + \left(0.5 \cdot Db_{bs}\right) = 2.25\ in$

Modular ratio..... $n := E_s \div E_c$ $n = 6.3$

Reinforcement ratio..... $\rho := \frac{A_{s.prov.s}}{b \cdot d}$ $\rho = 0.00889$

Compression factors: $k := \sqrt{2 \cdot \rho \cdot n + (\rho \cdot n)^2} - \rho \cdot n$ $k = 0.284$

$j := 1 - k \div 3$ $j = 0.905$

Service tensile force in steel..... $T_{s.s} := \frac{M_{s.s}}{j \cdot d}$ $T_{s.s} = 10.14\ kip$

Service tensile stress in steel..... $f_{s.s} := \frac{T_{s.s}}{A_{s.prov.s}}$ $f_{s.s} = 25.35\ ksi$

Calculate Beta S ..... $\beta_s := 1 + \frac{d_{c.cvr}}{0.7 \cdot \left(T_b - d_{c.cvr}\right)}$ $\beta_s = 1.857$
AASHTO LRFD Equation 5.6.7-2

Max spacing reinforcement ..... $s_{max.s} := \left(\frac{700 \cdot \gamma_e \cdot in}{\beta_s \cdot \frac{f_{s.s}}{ksi}}\right) - 2 \cdot d_{c.cvr} = 8.6\ in$
AASHTO LRFD Equation 5.6.7-1

$s_{max.s} := min\left(1.5 \cdot T_b, s_{max.s}, 18\ in\right) = 8.6\ in$

Check steel spacing for crack control.... $check_s := \text{if}\left(spacing_s \le \left|s_{max.s}\right|, \text{"OK"}, \text{"NG"}\right)$ $check_s = \text{"OK"}$

Base Floor Slab Shear Analysis and Check (Short Direction):

Determine Effective Shear Depth..... $M_n := A_{s.prov.s} \cdot f_y \cdot \left(d_{bs} - \frac{a}{2}\right) = 7.03\ kip \cdot ft$

$d_{bsv'} := \frac{M_n}{A_{s.prov.s} \cdot f_y} = 3.51\ in$

$d_{e1} := 0.9 \cdot d_{bs} = 3.38\ in$

$d_{e2} := 0.72 \cdot T_b = 4.32\ in$

$d_e := \text{if}\left(d_{e1} \geq d_{e2}, d_{e1}, d_{e2}\right) = 4.32\ in$

$d_{bsv} := \text{if}\left(d_{bsv'} > d_e, d_{bsv'}, d_e\right) = 4.32\ in$

Shear Load, Short Direction..... $V_{u.s} := W_A \cdot w_{u.base} \cdot \left(\frac{W}{2} - d_{bsv}\right) \cdot b \quad V_{u.s} = 3.82\ kip$

Shear Capacity in Short Direction..... $\phi V_{c.s.base} := \phi_v \cdot 0.0316 \cdot \beta \cdot \left(\sqrt{\frac{f'_c}{ksi}} \cdot ksi\right) \cdot b_v \cdot d_{bsv}$

$\phi V_{c.s.base} = 6.59\ kip$

$\text{if}\left(V_{u.s} < \phi V_{c.s.base}, \text{"OK"}, \text{"NG"}\right) = \text{"OK"}$

Base Floor Slab Moment Analysis and Required Flexural Reinforcement (Long Direction)

Moment at Midspan Long Direction..... $M_{u.l} := C_B \cdot w_{u.base} \cdot Span_L^{\ 2} \cdot b \qquad M_{u.l} = 0\ kip \cdot ft$

Ratio of Reinforcement to Concrete..... $A_{sbl} := \left(1 - \left(\sqrt{1 - \frac{2 \cdot M_{u.l}}{\phi_f \cdot b \cdot (d_{bl})^2 \cdot 0.85 \cdot f'_c}}\right)\right) \cdot \frac{0.85 \cdot f'_c \cdot b \cdot d_{bl}}{f_y}$

Area of Reinforcing, Long Direction..... $A_{sbl} = 0\ in^2$

Check Minimum Required Reinforcement Base Floor Slab Long Direction (AASHTO LRFD Section 5.6.3.3)

Flexural Cracking Variability Factor..... $\gamma_1 := 1.6$

Ratio of Yield Strength to Ultimate Tensile Strength..... $\gamma_3 := 0.67$

Half of Base Slab Section Thickness..... $c_{nc} := \frac{T_b}{2} = 3\ in$

Concrete Density Modification Factor..... $\lambda := 1.0$

Modulus of Rupture of Concrete..... $f_r := 0.24 \cdot \lambda \cdot \left(f'_c \cdot \left(\frac{in^2}{kip}\right)\right)^{0.5} \cdot ksi = 0.537\ ksi$

Section Modulus, Non-Composite Section..... $S_{nc} := \frac{I_{g.base}}{c_{nc}} = 72\ in^3$

Cracking Moment..... $M_{cr} := \gamma_3 \cdot (\gamma_1 \cdot f_r) \cdot S_{nc} = 3.45\ kip \cdot ft$

Alternate Moment for Min. Reinf. Consideration..... $M_{u.min} := 1.33 \cdot M_{u.l} = 0\ kip \cdot ft$

Controlling Moment for Min. Reinf. Evaluation..... $M_{u.min} := M_{cr}$

$M_{u.min} = 3.45\ kip \cdot ft$

Min. Req'd Steel Area Base Floor Slab (Long Direction):

$$A_{s.min} := \left(1 - \left(\sqrt{1 - \frac{2 \cdot M_{u.min}}{\phi_f \cdot b \cdot (d_{bl})^2 \cdot 0.85 \cdot f'_c}}\right)\right) \cdot \frac{0.85 \cdot f'_c \cdot b \cdot d_{bl}}{f_y}$$

$A_{s.min} = 0.25\ in^2$

$A_{sbl} := \text{if}\left(A_{sbl} > A_{s.min}, A_{sbl}, A_{s.min}\right)$

Req'd Steel Area Base Slab (Long Direction)..... $A_{sbl} = 0.25\ in^2$

Check Required Shrinkage and Temperature Reinf. Base Floor Slab Long Direction (AASHTO LRFD Section 5.10.6)

$$A_{s.temp'} := \frac{1.3 \cdot b \cdot T_b}{2 \cdot (b + T_b) \cdot f_y \cdot \left(\frac{in}{kip}\right)} = 0.04\ in^2$$

$$A_{s.temp} := \left\| \begin{array}{l} \text{if } A_{s.temp'} \le 0.11\ in^2 \\ \quad \| \ 0.11\ in^2 \\ \text{also if } 0.11\ in^2 < A_{s.temp'} < 0.60\ in^2 \\ \quad \| \ (A_{s.temp'}) \\ \text{else} \\ \quad \| \ 0.60\ in^2 \end{array} \right\|$$

$A_{s.temp} = 0.11\ in^2$

$A_{sbl} := \text{if}\left(A_{sbl} > A_{s.temp}, A_{sbl}, A_{s.temp}\right)$

Req'd Steel Area Base Slab (Long Direction)..... $A_{sbl} = 0.25\ in^2$

Check Steel Provided for Base Floor Slab (Long Direction) :

Bar Diameter..... $Db_{bl} = 0.5\ in$

Bar Spacing..... $spacing_l := 6 \cdot in$

Bar Area..... $A_{bar} := \pi \cdot \frac{Db_{bl}^2}{4} = 0.20\ in^2$ $A_{bar} := \text{Round}\left(A_{bar}, .01 \cdot in^2\right) = 0.20\ in^2$

Area Provided w/ Spacing..... $A_{s.prov.l} := \frac{A_{bar} \cdot 1 \cdot ft}{spacing_l} = 0.40\ in^2$

Required Steel Area..... $A_{sbl} = 0.25\ in^2$

$\text{if}\left(A_{sbl} \le A_{s.prov.l}, \text{"OK"}, \text{"NG"}\right) = \text{"OK"}$

Check Steel Reinforcement Yield for Flexure (Base Floor Slab Long Direction) AASHTO LRFD 5.6.2.1:

Depth of Equivalent Rectangular Stress Block.... $a := \frac{A_{s.prov.l} \cdot f_y}{0.85 \cdot f'_c \cdot b} = 0.47\ in$

Distance to Neutral Axis..... $c := \frac{a}{\beta_1} = 0.59\ in$

Distance to the Centroid of Tensile Reinf..... $d_s := d_{bl} = 3.25\ in$

Strain Limit for Tensile Reinf. (Table C5.6.2.1-1)..... $\varepsilon_{cl} := .002$

Check that Tensile Reinforcement has Yielded..... $Check_1 := \frac{c}{d_s} = 0.181$

$Check_2 := \frac{.003}{.003 + \varepsilon_{cl}} = 0.6$

$Verify := \text{if}\left(Check_1 \le Check_2, \text{"Tension Control"}, \text{"Not Tension Control""}\right) = \text{"Tension Control"}$

Steel Yields, Assumption Phi (Flexure=0.90) is OK

Note: Crack Control check for Base Floor Slab Steel (Long Direction) not required. Base slab designed as one way slab in the short direction due to span ratio. Use reinforcement determined above for long direction.

Determine Required Splice Length of Wall WWR with Projecting Base Bars:

Base slab bars are #4 bars long and short direction. Project base slab bars (each way) into walls for a distance equal to 1'-0" above the top of the base slab. Splice WWR in walls with the base slab bars for a minimum distance of (1.3 times the WWR's basic development length) or (8 inches) per AASHTO LRFD 5.10.8.5.1. For these calculations use fy=70 ksi for the WWR in the walls.

$f_{y.mesh} := 70\ ksi \qquad f'_c = 5\ ksi \qquad \lambda = 1$

$Db_{wv} = 0.391\ in$

$s_w := spacing_v \qquad s_w = 3\ in$

$A_w := \frac{\pi \cdot Db_{wv}^2}{4} \qquad A_w := \text{Round}\left(A_w, .01 \cdot in^2\right) = 0.12\ in^2$

$l_{hd1} := 0.95 \cdot Db_{wv} \cdot \frac{\left(f_{y.mesh} - 20 \cdot ksi\right)}{\lambda \cdot \left(f'_c \cdot \left(\frac{in^2}{kip}\right)\right)^{0.5} \cdot ksi} = 8.31\ in$ AASHTO LRFD Equation (5.10.8.2.5a-1)

$l_{hd2} := \frac{6.3 \cdot A_w \cdot f_{y.mesh} \cdot \frac{in^2}{kip}}{s_w \cdot \lambda \cdot \left(f'_c \cdot \left(\frac{in^2}{kip}\right)\right)^{0.5}} = 7.89\ in$ AASHTO LRFD Equation (5.10.8.2.5a-2)

$l_{hd} := \text{if}\left(l_{hd1} \ge l_{hd2}, l_{hd1}, l_{hd2}\right) = 8.31\ in$

$Splice_1 := 1.3 \cdot l_{hd} = 10.8\ in \qquad Splice_2 := 8.0\ in$

$Splice_{reqd} := \text{if}\left(Splice_1 \ge Splice_2, Splice_1, Splice_2\right) = 10.8\ in$ Required minimum splice length for WWR in the walls with the projecting base slab bars.

Reference attached drawings, minimum splice length provided is 14 inches which is greater than the required 10 3/4 inch minimum, therefore OK.

Design of Riser Walls:

Loading - Walls of Riser Section - External Lateral Pressure

Lateral Live Load Surcharge (LS)

Depth to bottom of section..... $H_b := H - T_b - h_{bb} = 6.67\ ft$

Equivalent Height of Soil..... $h_{eq} := 4.0\ ft$

AASHTO LRFD Table 3.11.6.4-1

$LS := k_a \cdot \gamma_s \cdot h_{eq}$

Lateral Earth Surcharge from LL..... $LS = 0.143\ ksf$ Service Load

Lateral Earth Pressure (EH) Loading above section (Service Load):

$$EH_{abv} := (H - T_b - h_{bb} - h_r - H_{wt}) \cdot (\gamma_{eq}) + H_{wt} \cdot \gamma_s \cdot k_a$$

Total Loading above section (Service Load):

$w_{as} := LS + EH_{abv}$

$w_{as} = 0.355\ ksf$

Lateral Earth Pressure (EH) Loading directly on section (Service Load):

$EH_{dir} := h_r \cdot \gamma_{eq}$

$EH_{dir} = 0.318\ ksf$ Note: $w_{bs} := EH_{dir}$

Total Loading (Service):

$$w_{svc.r} := \left(w_{as} + \frac{w_{bs}}{2}\right) \cdot b = 0.514\ klf$$

Total Loading (Factored):

$w_{a.r} := (LS \cdot LLF_h) + (EH_{abv} \cdot SLF_h) = 0.584\ ksf$

$w_{b.r} := (EH_{dir} \cdot SLF_h) = 0.501\ ksf$

$$w_{u.r} := \left(w_{a.r} + \frac{w_{b.r}}{2}\right) \cdot b = 0.834\ klf$$

Bending Moment Analysis Horizontal Loading (Riser Section Walls)

Moment In Corners..... $Mcor_{u.r} := \frac{w_{u.r}}{12} \cdot \left(\frac{Span_L^{\ 3} + Span_W^{\ 3}}{Span_L + Span_W}\right) = 3.81\ kip \cdot ft$

Moment in Long Span..... $Mlong_{u.l.r} := \frac{w_{u.r} \cdot Span_L^{\ 2}}{8} - Mcor_{u.r} = 3.73\ kip \cdot ft$

Moment in Short Span..... $Mshort_{u.w.r} := \frac{w_{u.r} \cdot Span_W^{\ 2}}{8} - Mcor_{u.r} = -2.53\ kip \cdot ft$

Maximum Factored Moment..... $Mcor_{u.r} = 3.81\ kip \cdot ft$

Determine Required Circumferential Reinforcement (Riser Walls)

Steel Area Required..... $A_{srh} := \left(1 - \left(\sqrt{1 - \frac{2 \cdot Mcor_{u.r}}{\phi_f \cdot b \cdot (d_{wr})^2 \cdot 0.85 \cdot f'_c}}\right)\right) \cdot \frac{0.85 \cdot f'_c \cdot b \cdot d_{wr}}{f_y}$

Area of Flexural Reinforcing, Horizontal..... $A_{srh} = 0.3\ in^2$

Check Minimum Required Reinforcement Riser Walls Horizontal Direction (AASHTO LRFD Section 5.6.3.3)

Flexural Cracking Variability Factor..... $\gamma_1 := 1.6$

Ratio of Yield Strength to Ultimate Tensile Strength..... $\gamma_3 := 0.67$

Half of Wall Section Thickness..... $c_{nc} := \frac{T_{wb}}{2} = 3\ in$

Concrete Density Modification Factor..... $\lambda := 1.0$

Modulus of Rupture of Concrete..... $f_r := 0.24 \cdot \lambda \cdot \left(f'_c \cdot \left(\frac{in^2}{kip}\right)\right)^{0.5} \cdot ksi = 0.537\ ksi$

Section Modulus, Non-Composite Section..... $S_{nc} := \frac{I_{g.wall}}{c_{nc}} = 72\ in^3$

Cracking Moment..... $M_{cr} := \gamma_3 \cdot (\gamma_1 \cdot f_r) \cdot S_{nc} = 3.45\ kip \cdot ft$

Alternate Moment for Min. Reinf. Consideration..... $M_{u.min} := 1.33 \cdot Mcor_{u.r} = 5.06\ kip \cdot ft$

Controlling Moment for Min. Reinf. Evaluation..... $M_{u.min} := \text{if}\left(M_{cr} \le M_{u.min}, M_{cr}, M_{u.min}\right)$

$M_{u.min} = 3.45\ kip \cdot ft$

Min. Req'd Steel Area Riser Walls (Horizontal Direction):

$$A_{s.min} := \left(1 - \left(\sqrt{1 - \frac{2 \cdot M_{u.min}}{\phi_f \cdot b \cdot (d_{wr})^2 \cdot 0.85 \cdot f'_c}}\right)\right) \cdot \frac{0.85 \cdot f'_c \cdot b \cdot d_{wr}}{f_y}$$

$A_{s.min} = 0.27\ in^2$

$A_{srh} := \text{if}\left(A_{srh} > A_{s.min}, A_{srh}, A_{s.min}\right)$

Req'd Steel Area Riser Walls (Horizontal)..... $A_{srh} = 0.3\ in^2$

Check Required Shrinkage and Temperature Reinf. Riser Walls Horiz. Direction (AASHTO LRFD Section 5.10.6)

$$A_{s.temp'} := \frac{1.3 \cdot b \cdot T_{wb}}{2 \cdot (b + T_{wb}) \cdot f_y \cdot \left(\frac{in}{kip}\right)} = 0.04\ in^2$$

$$A_{s.temp} := \left\| \begin{array}{l} \text{if } A_{s.temp'} \le 0.11\ in^2 \\ \quad \| \ 0.11\ in^2 \\ \text{also if } 0.11\ in^2 < A_{s.temp'} < 0.60\ in^2 \\ \quad \| \ (A_{s.temp'}) \\ \text{else} \\ \quad \| \ 0.60\ in^2 \end{array} \right\|$$

$A_{s.temp} = 0.11\ in^2$

$A_{srh} := \text{if}\left(A_{srh} > A_{s.temp}, A_{srh}, A_{s.temp}\right)$

Req'd Steel Area Riser Walls (Horizontal)..... $A_{srh} = 0.3\ in^2$

Check Steel Provided Riser Walls Riser (Horizontal Direction):

Bar Diameter..... $Db_{wr} = 0.391\ in$

Steel Spacing..... $spacing_{hr} := 3 \cdot in$

Area of Steel..... $A_{bar} := \pi \cdot \frac{Db_{wr}^2}{4} = 0.120\ in^2$ $A_{bar} := \text{Round}\left(A_{bar}, .001 \cdot in^2\right) = 0.12\ in^2$

Area Provided with Spacing..... $A_{s.prov.hr} := \frac{A_{bar} \cdot 1 \cdot ft}{spacing_{hr}} = 0.48\ in^2$

Area Required..... $A_{srh} = 0.30\ in^2$ $\text{if}\left(A_{srh} \le A_{s.prov.hr}, \text{"OK"}, \text{"NG"}\right) = \text{"OK"}$

Check Steel Reinforcement Yield for Flexure (Riser Walls Horizontal Direction) AASHTO LRFD 5.6.2.1:

Depth of Equivalent Rectangular Stress Block.... $a := \frac{A_{s.prov.hr} \cdot f_y}{0.85 \cdot f'_c \cdot b} = 0.56\ in$

Distance to Neutral Axis..... $c := \frac{a}{\beta_1} = 0.71\ in$

Distance to the Centroid of Tensile Reinf..... $d_s := d_{wr} = 3\ in$

Strain Limit for Tensile Reinf. (Table C5.6.2.1-1)..... $\varepsilon_{cl} := .002$

Check that Tensile Reinforcement has Yielded..... $Check_1 := \frac{c}{d_s} = 0.235$

$Check_2 := \frac{.003}{.003 + \varepsilon_{cl}} = 0.6$

$Verify := \text{if}\left(Check_1 \le Check_2, \text{"Tension Control"}, \text{"Not Tension Control""}\right) = \text{"Tension Control"}$

Steel Yields, Assumption Phi (Flexure=0.90) is OK

Check Crack Control for Corner Wall Steel (Riser Section Wall Horizontal)

Service Moment In Corners..... $Mcor_{s.r} := \frac{w_{svc.r}}{12} \cdot \left(\frac{Span_L^3 + Span_W^3}{Span_L + Span_W}\right) = 2.34\ kip \cdot ft$

Depth to centroid of wall reinforcing..... $d := d_{wr}$ $d = 3.00\ in$

Concrete cover from extreme tension fiber to center of flexural reinforcement..... $d_{c.cvr} := C_{wr} + \left(0.5 \cdot Db_{wr}\right) = 3\ in$

Modular ratio..... $n := E_s \div E_c$ $n = 6.3$

Reinforcement ratio..... $\rho := \frac{A_{s.prov.hr}}{b \cdot d}$ $\rho = 0.01331$

Compression factors: $k := \sqrt{2 \cdot \rho \cdot n + (\rho \cdot n)^2} - \rho \cdot n$ $k = 0.335$

$j := 1 - k \div 3$ $j = 0.888$

Service tensile force in steel..... $T_{s.hr} := \frac{Mcor_{s.r}}{j \cdot d}$ $T_{s.hr} = 10.54\ kip$

Service tensile stress in steel..... $f_{s.hr} := \frac{T_{s.hr}}{A_{s.prov.hr}}$ $f_{s.hr} = 21.95\ ksi$

Calculate Beta S..... $\beta_s := 1 + \frac{d_{c.cvr}}{0.7 \cdot (T_{wb} - d_{c.cvr})}$ $\beta_s = 2.424$
AASHTO LRFD Equation 5.6.7-2

Max spacing reinforcement ..... $s_{max.hr} := \left(\frac{700 \cdot \gamma_e \cdot in}{\beta_s \cdot \frac{f_{s.hr}}{ksi}} \right) - 2 \cdot d_{c.cvr} = 5.6\ in$
AASHTO LRFD Equation 5.6.7-1

$s_{max.hr} := min(1.5 \cdot T_{wb}, s_{max.hr}, 18\ in) = 5.6\ in$

Check steel spacing for crack control.... $check_{hr} := \text{if}(spacing_{hr} \le |s_{max.hr}|, \text{"OK"}, \text{"NG"})$ $check_{hr} = \text{"OK"}$

Check Wall Shear Capacity Horizontal Loading (Riser Section Walls)

Determine Effective Shear Depth..... $M_n := A_{s.prov.hr} \cdot f_y \cdot \left(d_{wr} - \frac{a}{2} \right) = 6.53\ kip \cdot ft$

$d_{wrv'} := \frac{M_n}{A_{s.prov.hr} \cdot f_y} = 2.72\ in$

$d_{e1} := 0.9 \cdot d_{wr} = 2.7\ in$

$d_{e2} := 0.72 \cdot T_{wb} = 4.32\ in$

$d_e := \text{if}(d_{e1} \ge d_{e2}, d_{e1}, d_{e2}) = 4.32\ in$

$d_{wrv} := \text{if}(d_{wrv'} > d_e, d_{wrv'}, d_e) = 4.32\ in$

Max Shear Load On Riser Walls (Horizontal)..... $V_{u.r} := (w_{u.r}) \cdot \left(\frac{L}{2} - d_{wrv} \right)$ $V_{u.r} = 3.04\ kip$

$\phi V_{c.r} := \phi_v \cdot 0.0316 \cdot \beta \cdot \left(\sqrt{\frac{f'_c}{ksi}} \cdot ksi \right) \cdot b_v \cdot (d_{wrv})$

Shear Capacity, Riser Walls (Horizontal)..... $\phi V_{c.r} = 6.59\ kip$

$\text{if}(V_{u.r} < \phi V_{c.r}, \text{"OK"}, \text{"NG"}) = \text{"OK"}$

Determine Required Reinforcement (Riser Section Walls Verical Direction):

Note: Due to the fact that applied loading is carried by the horizontal reinforcement, vertical reinforcement for the riser walls is to be based on the required amount of shrinkage and temperature reinforcement.

Check Required Shrinkage and Temperature Reinf. Riser Walls Vert. Direction (AASHTO LRFD Section 5.10.6)

$A_{s.temp'} := \frac{1.3 \cdot b \cdot T_{wb}}{2 \cdot (b + T_{wb}) \cdot f_y \cdot \left(\frac{in}{kip} \right)} = 0.04\ in^2$

$A_{s.temp} :=$ if $A_{s.temp'} \le 0.11\ in^2$ → $0.11\ in^2$; also if $0.11\ in^2 < A_{s.temp'} < 0.60\ in^2$ → $(A_{s.temp'})$; else → $0.60\ in^2$

$A_{s.temp} = 0.11\ in^2$

Min. Req'd Steel Area (Riser Walls Vertical)..... $A_{srv} := A_{s.temp} = 0.11\ in^2$

Check Steel Provided Riser Walls Riser (Vertical Direction):

Bar Diameter..... $Db_{wvr} = 0.391\ in$

Steel Spacing..... $spacing_{vr} := 3 \cdot in$

Area of Steel..... $A_{bar} := \pi \cdot \frac{Db_{wvr}^{\ 2}}{4} = 0.120\ in^2$ $\quad A_{bar} := \mathrm{Round}\left(A_{bar}, .001 \cdot in^2\right) = 0.12\ in^2$

Area Provided with Spacing..... $A_{s.prov.vr} := \frac{A_{bar} \cdot 1 \cdot ft}{spacing_{vr}} = 0.48\ in^2$

Area Required..... $A_{srv} = 0.11\ in^2$ $\quad \mathrm{if}\left(A_{srv} \le A_{s.prov.vr}, \text{"OK"}, \text{"NG"}\right) = \text{"OK"}$

Design Summary:

Base Section Walls:

Base Wall Thickness..... $T_{wb} = 6\ in$

Horizontal Wall Steel
Area Required..... $A_{swh} = 0.33\ in^2$

Horizontal Steel Provided..... $A_{s.prov.h} = 0.48\ in^2$

$Db_w = 0.391\ in$ D12 bars $spacing_h = 3\ in$

Vertical Wall Steel
Area Required..... $A_{swv} = 0.32\ in^2$

Vertical Steel Provided..... $A_{s.prov.v} = 0.48\ in^2$

$Db_{wv} = 0.391\ in$ D12 bars $spacing_v = 3\ in$

Base Section Floor Slab:

Base Slab Thickness..... $T_b = 6\ in$

Base Steel Area Required
in Short Direction..... $A_{sbs} = 0.32\ in^2$

Short Direction Steel
Provided..... $A_{s.prov.s} = 0.40\ in^2$

$Db_{bs} = 0.500\ in$ #4 bars $spacing_s = 6\ in$

Base Steel Area Required
in Long Direction..... $A_{sbl} = 0.25\ in^2$

Long Direction Steel
Provided..... $A_{s.prov.l} = 0.40\ in^2$

$Db_{bl} = 0.500\ in$ #4 bars $spacing_l = 6\ in$

Precast Concrete Box Design

Riser Section Walls:

Riser Wall Thickness..... $T_{wb} = 6\ in$

Horizontal Wall Steel
Area Required..... $A_{srh} = 0.30\ in^2$

Horizontal Steel Provided..... $A_{s.prov.hr} = 0.48\ in^2$

$Db_{wr} = 0.391\ in$ D12 bars $spacing_{hr} = 3\ in$

Vertical Wall Steel
Area Required..... $A_{srv} = 0.11\ in^2$

Vertical Steel Provided..... $A_{s.prov.vr} = 0.48\ in^2$

$Db_{wvr} = 0.391\ in$ D12 bars $spacing_{vr} = 3\ in$

Notes:

(1) Horizontal wall reinf. (base section and riser) shall be continuous (fully developed) around corners.
(2) For square structures Long Direction and Short Direction are equal.