REV. 6/14/13: REVISED NOTE (F), ADDED NOTES (G) AND (H).

REV. 06-28-19: ADJUSTED A-A AND ELEVATION VIEWS. RENAMED AND REDREW SHEET.

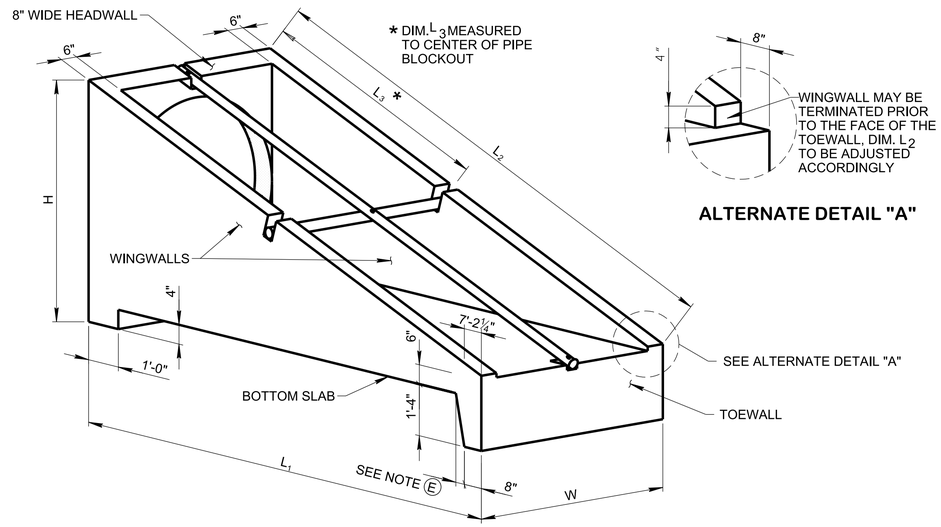

ISOMETRIC VIEW

NOTES: SEE STD. DWG. D-PE-99 FOR STEEL PIPE GRATE DETAILS
¾" CHAMFER REQUIRED ON ALL EXPOSED EDGES

ALTERNATE DETAIL "A"

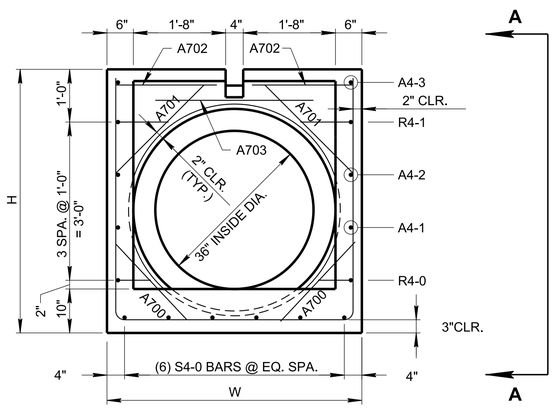

ELEVATION

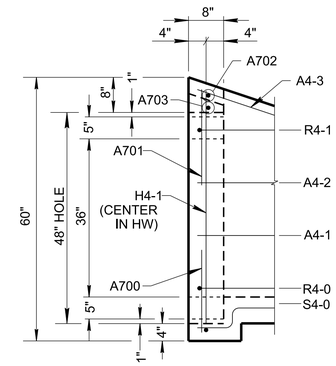

PARTIAL VIEW A-A

HEADWALL DETAILS

NOTES: INSTALL BARS A701 AT 45°
SEE GENERAL NOTE (C)

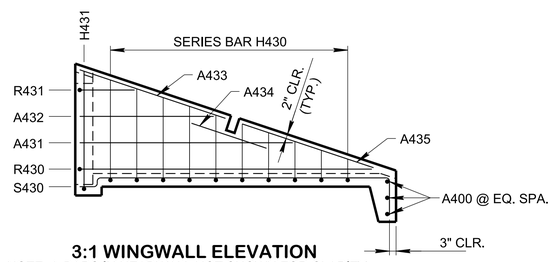

3:1 WINGWALL ELEVATION

NOTE: A-BARS IN HEADWALL NOT SHOWN FOR CLARITY.

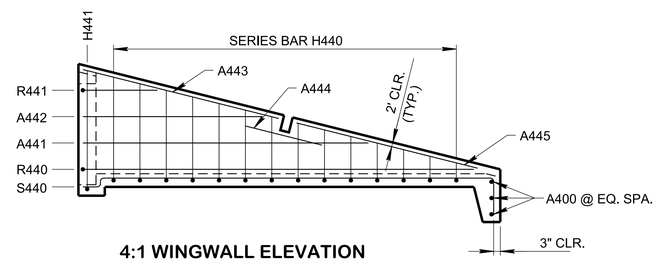

4:1 WINGWALL ELEVATION

NOTE: A-BARS IN HEADWALL NOT SHOWN FOR CLARITY.

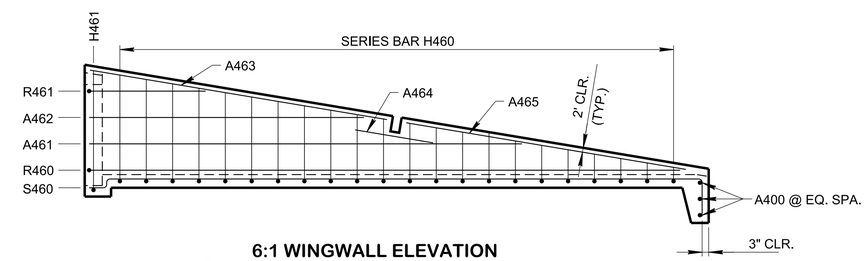

6:1 WINGWALL ELEVATION

NOTE: A-BARS IN HEADWALL NOT SHOWN FOR CLARITY.

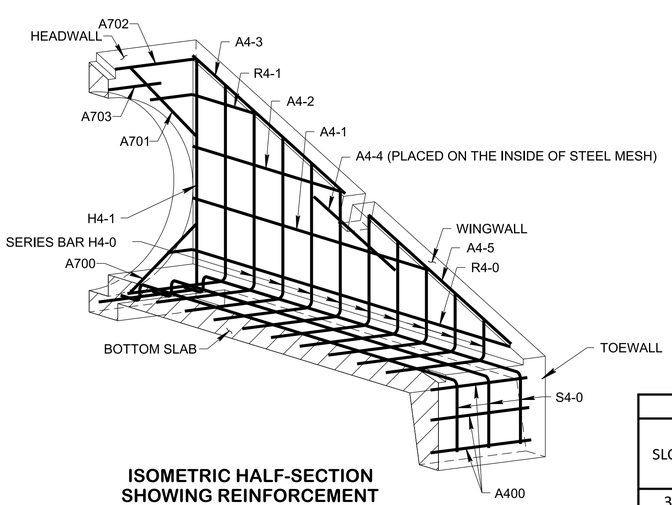

ISOMETRIC HALF-SECTION SHOWING REINFORCEMENT

(3:1 SHOWN, 4:1 & 6:1 SIMILAR)
SEE GENERAL NOTE (C)

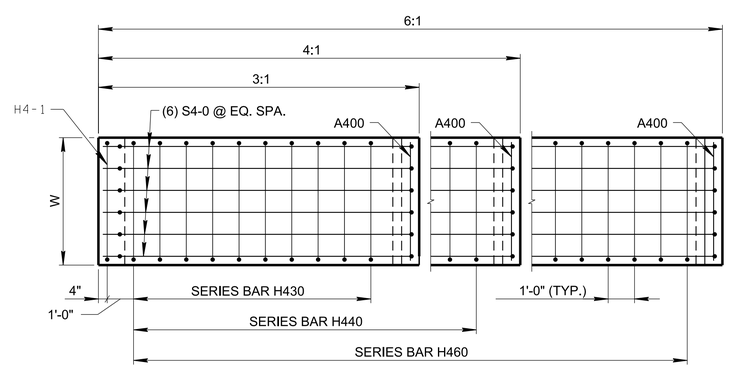

BOTTOM SLAB PLAN

DIMENSIONS AND QUANTITIES FOR ONE ENDWALL 36" PIPE										
SLOPE	CONCRETE ENDWALL DIMENSIONS					STRUCTURAL STEEL PIPE DIMENSIONS		ESTIMATED QUANTITIES		
	H	L_1	L_2	L_3	W	LG	WG	CLASS "A" CONC. CU. YD.	STEEL BAR REINF. LB.	STRUCTURAL STEEL LB.
3:1	5' - 0"	12' - 2"	12' - 9⅞"	6' - 4¾"	4' - 8"	12' - 8¾"	4' - 8"	2.43	219	132
4:1		16' - 0"	16' - 5⅞"	8' - 2½"		16' - 5"		3.08	276	160
6:1		23' - 8"	23' - 11⅞"	12' - 0¼"		23' - 11⅜"		4.39	388	217

NOTE: SEE STD. DWG. D-PE-99 FOR STRUCTURAL STEEL PIPE DIMENSIONS LG & WG.

GENERAL NOTES

(A) DRAWING TO BE USED FOR ALL CAST-IN-PLACE AND ALL PRECAST 36" CONCRETE ENDWALLS (TYPE "U") FOR CROSS DRAINS ONLY. "U" ENDWALL TO BE PLACED AT 90° SKEW TO CENTERLINE. SEE STD. DWG. D-PE-99 FOR SKEWED CONNECTION DETAIL WHEN CROSS DRAIN IS NOT PERPENDICULAR TO CENTERLINE. CAST-IN-PLACE CONCRETE ENDWALL SHALL BE CONSTRUCTED IN ACCORDANCE WITH STANDARD SPECIFICATIONS, SECTION 611 AND/OR SPECIAL PROVISIONS.

(B) SEE STD. DWG. D-PE-36B FOR BILL OF STEEL & PRECAST NOTES.

(C) "-" IN BAR DESIGNATION REPRESENTS 3, 4 OR 6 FOR 3:1, 4:1 OR 6:1 SLOPES, RESPECTIVELY.

(D) SPLICING OF REINFORCEMENT IS ACCEPTABLE PROVIDED THAT A MINIMUM 21" SPLICE LENGTH IS USED.

(E) TOEWALL BACK SLOPE MAY BE CONSTRUCTED VARIABLE FROM VERTICAL UP TO 15°.

(F) PAYMENT WILL BE MADE UNDER:

611-07.63	36IN ENDWALL (CROSS DRAIN) 3:1	EACH
611-07.64	36IN ENDWALL (CROSS DRAIN) 4:1	EACH
611-07.65	36IN ENDWALL (CROSS DRAIN) 6:1	EACH

(G) THE CONTRACTOR MAY ELECT TO SUBSTITUTE AN APPROVED ALTERNATIVE DESIGN.

(H) DIMENSIONAL AND REINFORCING TOLERANCES WILL BE AS SHOWN IN STANDARD OPERATING PROCEDURE (SOP) 5-3.

MINOR REVISION -- FHWA APPROVAL NOT REQUIRED

STATE OF TENNESSEE
STANDARD DRAWING
DEPARTMENT OF TRANSPORTATION

TYPE "U"
CROSS DRAIN ENDWALL
FOR 36" PIPE
WITH STEEL PIPE GRATE
(FOR 3:1, 4:1 & 6:1 SLOPES)

03-01-2012 | D-PE-36A

NOT TO SCALE

11/8/2019 11:19:00 AM
C:\Users\jj00547\Desktop\DRAWINGS FOR IB SET D\DPE36A-20190628.dgn
LLP