FRAME SHOWN WITHOUT HARDWARE CLOTH OR FABRIC SLIPCOVER FOR CLARITY.

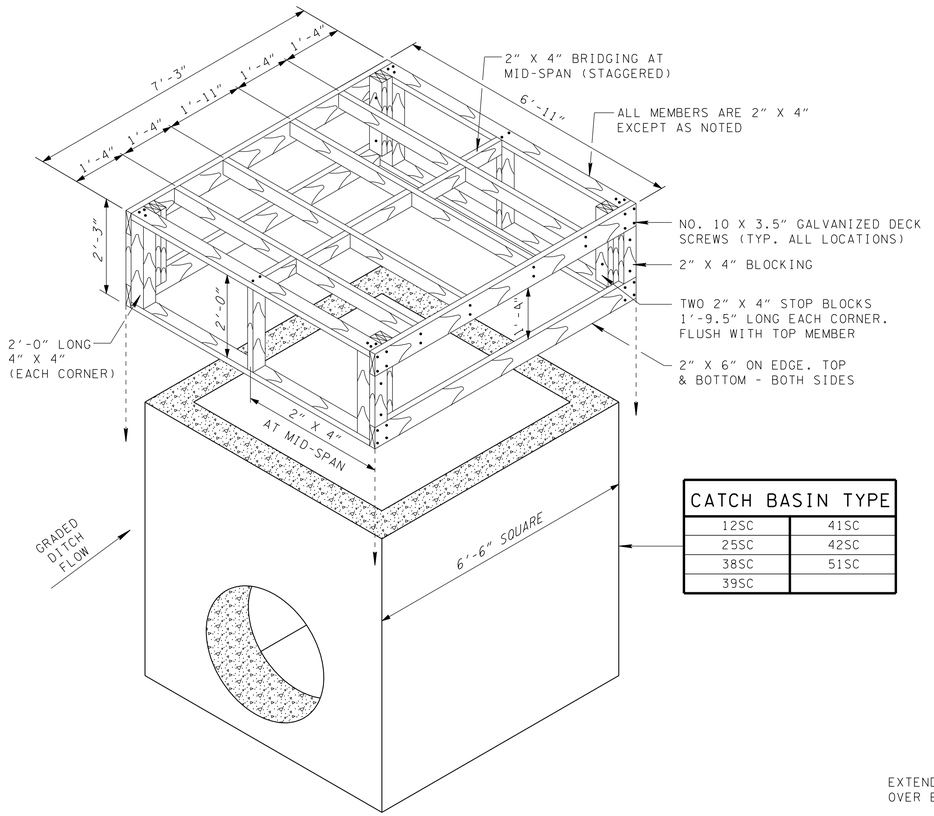

CATCH BASIN TYPE	
12SC	41SC
25SC	42SC
38SC	51SC
39SC	

ISOMETRIC VIEW
CATCH BASIN FILTER ASSEMBLY

N.T.S.

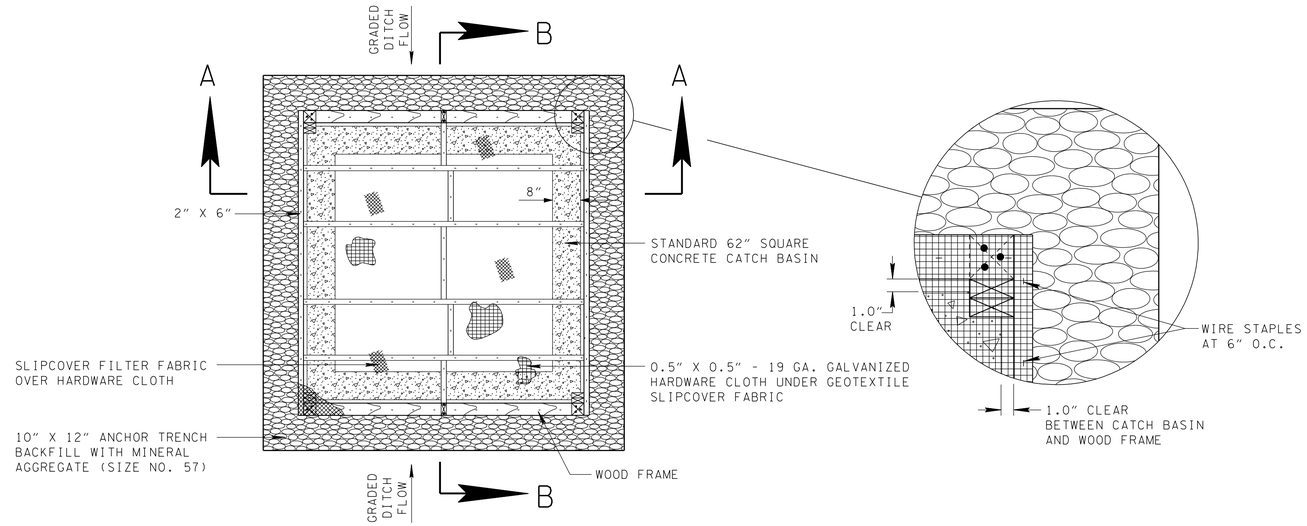

PLAN VIEW - CATCH BASIN FILTER ASSEMBLY

N.T.S.

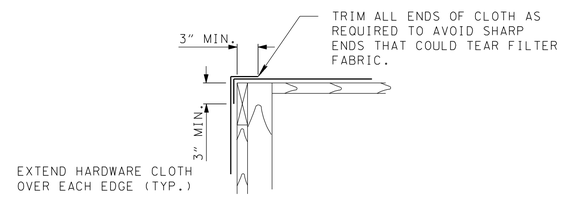

HARDWARE CLOTH OVERLAP DETAIL

N.T.S.

APPROXIMATE WEIGHT OF FRAME AND CLOTH = 183 LBS.

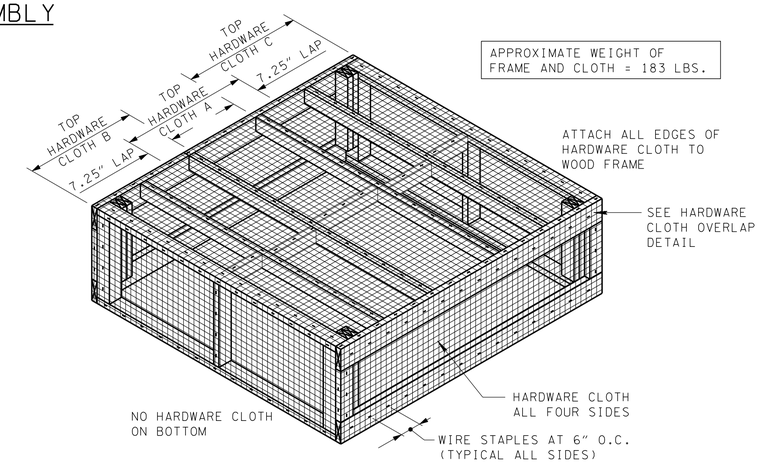

ISOMETRIC VIEW
FRAME WITH HARDWARE CLOTH

N.T.S.

EROSION CONTROL PLAN LEGEND: (3) CATCH BASIN FILTER ASSEMBLY (TYPE 3)

CATCH BASIN FILTER ASSEMBLY GENERAL NOTES

(A) DRAWING TO BE USED WITH STANDARD TYPE D-CB-SERIES SC CATCH BASINS. SEE STANDARD DRAWINGS FOR CATCH BASIN DIMENSIONS AND DETAILS.

(B) THE CATCH BASIN FILTER ASSEMBLY IS TO BE USED WHERE INTERCEPTION OF CONCENTRATED FLOWS (e.g. DITCHES AND SWALES) IS REQUIRED AFTER STRUCTURES ARE CONSTRUCTED BUT PRIOR TO ESTABLISHING VEGETATION.

(C) 2 x 4, 2 x 6, AND 4 x 4 PRESSURE TREATED MEMBERS SHOWN ARE NOMINAL DIMENSIONS. TYPICAL ACTUAL DIMENSIONS ARE 1.5 x 3.5 INCH, 1.5 x 5.5 INCH, AND 3.5 x 3.5 INCH, RESPECTIVELY. ACTUAL DIMENSIONS OF WOOD MAY VARY EVEN GREATER DEPENDING ON MOISTURE CONTENT. ALL WOOD SHALL BE NO. 2 PRESSURE TREATED SOUTHERN YELLOW PINE.

(D) PERIODIC MAINTENANCE AND CLEANING OF THE STRUCTURE SHALL BE PERFORMED AS NECESSARY TO PREVENT CLOGGING OF THE FILTER FABRIC. FILTER ASSEMBLY MAY BE CLEANED AT AN ACCEPTABLE LOCATION WITH WATER OR BY BRUSHING AND BLOWING CLEAN WITH COMPRESSED AIR. MAINTENANCE AND CLEANING OF STRUCTURES WILL NOT BE MEASURED AND PAID FOR DIRECTLY BUT SHALL BE INCLUDED IN THE PRICE BID FOR THE STRUCTURE.

(E) APPROPRIATE SIZING AND LOCATION OF LIFTING DEVICES SHALL BE THE RESPONSIBILITY OF THE FABRICATOR TO ASSURE BALANCED HANDLING DURING INSTALLATION AND REMOVAL OF THE FILTER ASSEMBLY.

CATCH BASIN FILTER ASSEMBLY GENERAL NOTES (CONT.)

(F) DEFECTIVE WOOD, HARDWARE CLOTH OR FILTER FABRIC SHALL BE REPLACED AS NECESSARY TO INSURE PROPER FUNCTIONING OF FILTER ASSEMBLY. REUSE OF ASSEMBLIES IS ACCEPTABLE PROVIDED THE UNIT IS IN PROPER WORKING CONDITION. APPROVAL MUST BE GIVEN BY TDOT ENGINEER.

(G) ASSEMBLY AND STONE SHALL BE REMOVED AFTER UPSTREAM VEGETATION HAS BEEN ESTABLISHED OR OTHER SEDIMENT CONTROL STRUCTURES ARE IN PLACE. BACKFILL AND COMPACT ANCHOR TRENCH TO FINAL GRADE AS REQUIRED AFTER REMOVAL.

(H) IF NECESSARY, AT DIRECTION OF TDOT ENGINEER, SLIPCOVER MAY BE SECURED IN PLACE AT THE LOWEST PRACTICAL POINT WITH NYLON STRING, TWINE, WIRE OR OTHER SUITABLE MATERIAL.

(I) WHERE LARGE QUANTITIES OF SEDIMENT OR HIGH VELOCITIES OF APPROACHING WATER ARE ANTICIPATED DUE TO SPACING OF CATCH BASINS, DITCH GRADE, ETC...OTHER EROSION PREVENTION AND SEDIMENT CONTROL DEVICES MAY BE NECESSARY UPSTREAM OF FILTER ASSEMBLY.

(J) ALL LABOR AND MATERIALS NECESSARY TO CONSTRUCT AND INSTALL TEMPORARY CATCH BASIN FILTER ASSEMBLY INCLUDING TRENCHING, BACKFILLING, STONE, AND SLIPCOVER SHALL BE PAID FOR UNDER ITEM NUMBER 209-40.43, CATCH BASIN FILTER ASSEMBLY (TYPE 3), PER EACH.

INSTALLATION SEQUENCE FOR HARDWARE CLOTH

INSTALL TOP HARDWARE CLOTH A. PULL MATERIAL TIGHT, LAP AND STAPLE AS SHOWN. CUT TO LENGTH AND TRIM SHARP EDGES.

INSTALL TOP HARDWARE CLOTH B - OVERLAPPING CLOTH A AT SECOND TOP BRACE. PULL CLOTH TIGHT, LAP, AND STAPLE AS SHOWN. CUT TO LENGTH AND TRIM ALL SHARP EDGES.

INSTALL TOP HARDWARE CLOTH C - OVERLAPPING CLOTH A AT THIRD TOP BRACE. PULL CLOTH TIGHT, LAP, AND STAPLE AS SHOWN. CUT TO LENGTH AND TRIM ALL SHARP EDGES.

INSTALL HARDWARE CLOTH AROUND EXTERIOR OF WOOD FRAME USING ONE CONTINUOUS PIECE BEGINNING AT A CORNER, ENDING AT SAME CORNER, AND OVERLAPPING AS REQUIRED. PULL TIGHT AND STAPLE EACH SIDE BEFORE PROCEEDING WITH SUBSEQUENT SIDES.

TRIM EXCESS ALONG BOTTOM AS NECESSARY.

STATE OF TENNESSEE
DEPARTMENT OF TRANSPORTATION

CATCH BASIN FILTER ASSEMBLY (TYPE 3)

4-15-04 | EC-STR-43