TYPE	YEAR	PROJECT NO.	SHEET NO.
CONST.	2018	33002-4177-04	2D

SPECIAL NOTES

PAVEMENT

EROSION PREVENTION AND SEDIMENT CONTROL

ENVIRONMENTAL

(1) STAFF FROM THE TDOT ENVIRONMENTAL DIVISION COMPLIANCE AND FIELD SERVICES OFFICE SHALL BE INVITED TO ALL PRE-CONSTRUCTION MEETINGS.

NOTE: CONTRACTOR TO BE RESPONSIBLE FOR KEEPING AREA DRAINED DURING RAIN EVENTS FOR PROJECT DURATION (500GPM CAPABLE SYSTEM)

BRIDGE CLEARANCE DIAGRAM

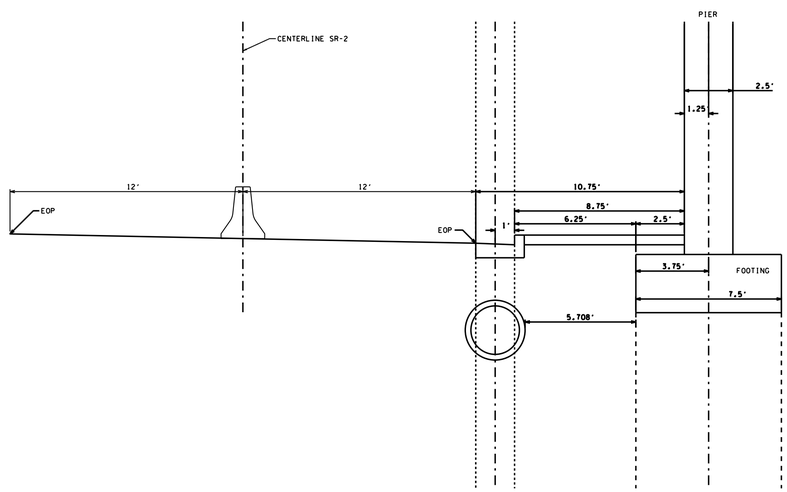

NOTE: DIMENSIONS SHOWN ON BRIDGE PIER AND FOOTING ARE FROM ORIGINAL BRIDGE PLANS. IN ORDER TO REDUCE CONFLICT, CONTRACTOR SHALL FIELD MEASURE AND CONFIRM APPROPRIATELY.

SEALED BY

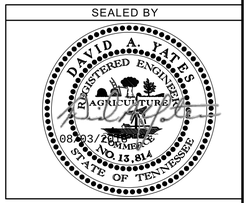

STATE OF TENNESSEE
DEPARTMENT OF
TRANSPORTATION

SPECIAL NOTES

IB-17-11
03-AUG-2018 08:42
\\tj02wf01\02shared\Design County Folders\Hamilton\SR 2 RSAR Cummings Hwy\Proposed Drainage Solutions May 2018\002D.sht