2020 Bridge Competition Guidelines
Grades 9 and 10

PLEASE THOUROGHLY READ ALL SECTIONS OF THIS DOCUMENT TO INSURE ADHERENCE TO THE COMPETITION GUIDELINES. RULES AND SPECIFICATIONS CHANGE EACH YEAR. A SAMPLE PORTFOLIO FOR GUIDANCE CAN BE FOUND AT THE WEBSITE https://tracrides.transportation.org/national-trac-bridge-challenge/

NEW FOR THIS YEAR*. The competition will be divided into two categories: Beginner TRAC and Advanced TRAC. The Beginner TRAC category will be open to those teams from schools competing for the first or second year in the national competition. Advanced TRAC category is for schools with teams returning to compete three or more consecutive years. Advanced TRAC teams will also have to complete an additional on-the-spot bridge challenge during the national competition that will be announced to the three finalist teams.*

COMPETITION FOR GRADES 9 and 10

The Competition:

This event is designed to allow students the opportunity to develop a **Deck Arch Truss Bridge** that will be tested for strength-to-weight ratio. Student teams from grades 9 and 10 will be competing against other TRAC student teams from across the country. Interested teams should fill out the attached application and submit it prior to the deadline of **November 1, 2019**. Please note there is a **maximum limit of five competition entries per school**. TRAC Headquarters will send a TRAC Challenge Entry Kit to each team to begin their project. Only materials included in the kit supplied by TRAC Headquarters can be used in the construction of the bridge. The kit will be shipped by **November 30, 2018** and will include **Balsa Wood and Glue**.

Other materials needed not provided in kit:

- Bentley PowerDraft Student Software (download link below)
  - http://apps.bentley.com/studentserver/home/index or see pages 13-14 of this document.
  - If the PowerDraft software cannot be downloaded, contact Program Manager Linda Clifton (*lclifton@aashto.org*)
- School Supplies

After completing the project, each team is required to submit a digital copy as a single file in PDF or DOC format to Linda Clifton, the National TRAC Program Manager. You must include pictures of the bridge (prototype or final). The proposal must be received no later than **February 14, 2020**. Winners will be notified by **March 13, 2020**. From those proposals entered, three teams from the Beginner TRAC and three teams from Advanced TRAC from this grade division will be chosen to attend the National TRAC Challenge Competition Finals at the AASHTO Spring Meeting, **May 18-21, 2020, Kansas City, Missouri.** At the Finals, teams will present a 10-minute PowerPoint presentation and structurally test their bridges against teams from other states to determine the winning bridge. Advanced TRAC will also compete in an On-The-Spot Bridge Challenge.

Who Can Enter?

- Only schools involved in the TRAC program can enter the competition.
- Students must be in grades 9th or 10th.
- Teams shall be composed of three (3) members. NOTE: If a team is chosen to compete in the national competition, three members must be present at the national competition unless the National TRAC Coordinator is notified of extenuating circumstances. Substitutions can be made as long as the new member has had an active role in the team.

The Problem:

The goal of this competition is to develop a **Deck Arch Truss Bridge** that will carry as much weight as possible while weighing as little as possible (strength-to-weight ratio). Each team is to research the bridge type, design and conduct experiments to test for strength-to-weight ratio, and then design a bridge resulting from those experiments. The teams are to construct a bridge **made only with the materials provided** in the TRAC Challenge Entry Kit. As a part of the Design Competition, the team is required to develop a report portfolio describing the design and testing of the bridge and create design drawings using Bentley PowerDraft CAD software.
Each bridge will be checked for design according to the rules. The bridges will be weighed and strength tested during the competition to calculate strength-to-weight ratio.

The Challenge:

An engineer's job is to not only design a safe bridge to carry required loads, but also to make sure that it is cost effective (least amount of materials used to achieve the desired load). To simulate this process, teams will use the following strength-to-weight ratio calculation to develop a bridge that carries a high load relative to the bridge weight. Strength to weight ratio is determined by dividing the maximum load carried by the weight of bridge.

Example: Maximum load = 120.0 pounds
Bridge weight = 20.0 grams
Ratio = 2724.0
[(120 pounds x 454g/pound) / 20 g]

Specifications for Deck Arch Truss Bridge:

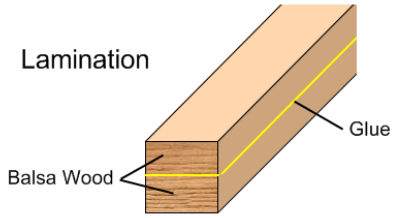

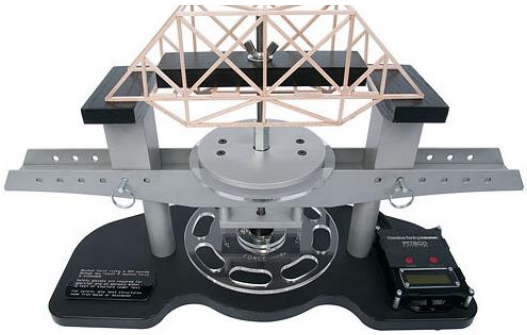

- The materials provided in the kit are the ONLY materials to be used when building the bridge structure. Any modifications to the structural properties of the balsa wood or using different glue than provided will result in judges recording zero weight held.
- The instrument used for testing will be the Pitsco Structures Testing Instrument as seen on the right.
- Lamination <u>is permitted one layer only</u>. Lamination is gluing two members along their length as shown in the picture on the right. If two laminated members are beside each other, there must be a minimum 1/8 inch gap maintained between them.
- Butt joints, notched joints, and lap joints are permitted. Lap joints should be no greater than ¼ inch.
- End to end, the length of the entire bridge must be 18 inches. The bottom chord as seen in the detail below shall be shaped as the arc of a circle or parabola, but does not have to be one single piece of wood.
- The minimum width of the bridge shall be no less than 2.0 inches and the maximum width of the bridge shall be no more than 4.5 inches.
- A block of wood that is 16 inches long by 2 inches wide by 1 inch high must be able to be laid across the top of the bridge deck as shown in the diagram below. The deck is considered the top of the bridge and does not have to be solid.
- Tester supports will be placed at 18 inches on center. Support dimensions are shown below.
- The bridge shall only touch the top and/or front of the Pitsco Tester Supports as seen in the diagram below. If the bridge touches any other part of the tester body, judges will record zero weight held.
- The bridge deck must have a 3/4 inch hole in mid-span to allow a 5/8 inch testing rod to pass through and attach to a 16 inch block of wood for strength testing as seen in the picture to the right and the diagram below. **The rod must be able to pass through the full height of the bridge**.

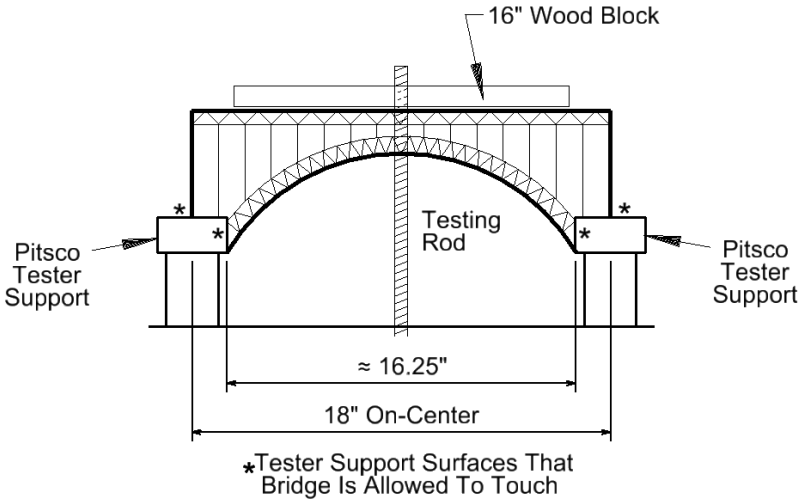

Tester Configuration Detail
Not representative of required design
Use only for dimension reference

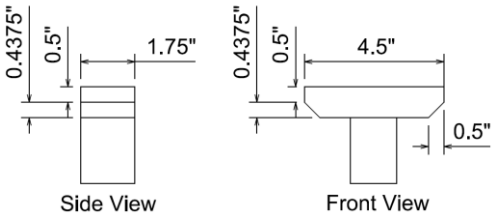

Support Detail

PROPOSAL FORMAT:

The information below gives an indication of what the judges are looking for in each section. **The proposal must contain all of the sections outlined below to be considered for the competition.**

I. BRIDGE PROPOSAL (See Page 5 for Assessment)

A. Proposal Format: The written proposal should be typed, double-spaced using a size 12 font of either Arial or Times New Roman on 8.5 x 11 paper with all pages numbered, 1" borders all around. Sections must be in order of the outline below:
B. Timeliness: Proposals received after the deadline will not be accepted.
C. Proposal Presentation: Portfolio **MUST** contain all the sections outlined below:

I. Title Page. Include name of challenge, team name, and logo, name of school or organization, names of students, name of teacher or advisor.

II. Table of Contents.

III. Summary (abstract). Clearly and concisely stated. (At least ½ page, no more than two pages)

IV. Introduction. Indicate the team name, team members as well as the background of each member.

V. Body. The main part of the report. This may be divided into several sections (such as Design, Development, etc.). In general, this part should:

a) Explain the scientific principles behind your design.
b) Describe the challenges you encountered in designing your bridge
c) Include Data Tables, Graphic Representation of Tests, and supporting Calculations page.
d) Include scaled drawings of preliminary and final bridge designs.
e) Include at least five pictures of team work during bridge design and construction, along with a picture of the constructed bridge (prototype or final).
f) Explain how you tested your design, and the improvements this led you to make.
g) Describe the challenges that you encountered in building your bridge and how you solved these problems. Include safety precautions, building methods, etc.

VI. Conclusions (and Recommendations). How successful is your project? What did you learn by taking part?

VII. Acknowledgments. List the names of the adults who assisted you in the project with a brief description of what they did. Include a certification, signed by all student team members and adults assisting, stating that: "We hereby certify that the majority of the ideas, design, and work was originated and performed by the students, with limited assistance by adults, as described above."

VIII. Bibliography. List all references used, including Internet, books and magazines.

IX. Appendices. They must include:

A. Scheduling and Accomplishments. Show on a time line, or similar method, how you scheduled your project. Include *brie*f records of meetings.
B. Daily Journal. Progress reports of day-to-day work on the project, including date, performance and comments from each team member.

PROPOSAL ASSESSMENT
2020 TRAC BRIDGE COMPETITION PROPOSAL FORMAT
Grades 9 and 10

Proposal Format

- ☐ Typed (1 point)
- ☐ Double Spaced (1 point)
- ☐ 12 Point Font (Arial or Times New Roman) (1 point)
- ☐ All pages on 8.5 x 11 paper (1 point)
- ☐ Information is in the proper order (2 point)
- ☐ All pages are numbered (1 point)
- ☐ Style and presentation (1 points)
- ☐ Mechanics (1 points)
- ☐ Visuals (1 points) Score _____/ 10 points

Proposal Presentation

- ☐ Title page (1 point)
- ☐ Table of Contents (1 point)
- ☐ Summary (no more than 2 pages) (5 points)
- ☐ Introduction (1 points)
- ☐ Body
  - Sections identified (3 points)
  - Scientific principles of the design (5 points)
  - Design challenges (5 points)
  - Tables, Graphs, Calculations (10 points)
  - Detailed scaled drawings (5 points)
  - Photos during and after construction (5 points)
  - Testing and improvements (5 points)
- ☐ Conclusion
  - Recommendations (5 points)
  - Success of the project (5 points)
  - What was learned by taking part (5 points)
- ☐ Acknowledgements
  - Adults involved (1 points)
  - Description of what the adults did (1 points)
  - Certification and signatures (1 points)
- ☐ Bibliography (1 points)
- ☐ Appendices
  - Schedule on a timeline or similar (5 points)
  - Daily Journals (must be legible) (20 points) Score _____ / 90 Points

TOTAL SCORE: _____/100 Points

BRIDGE COMPETITION FINALS

Teams will be chosen to attend the 2020 TRAC Bridge Finals by a panel of judges that score the portfolios. Winning teams will present at the AASHTO Spring Meeting to a panel of judges comprised of various AASHTO members and sponsors. Each team will be expected to make a PowerPoint presentation and be able to answer questions from the panel of judges about their entry. Supporting materials may be presented to the judges. All CAD drawings must be created using the Bentley PowerDraft CAD Software. Judges will examine each entry to make sure it fits the specifications given in the rules. The bridge brought to competition must be similar to the bridge submitted in the portfolio. The criteria below outlines the competition fundamentals:

A. SPECIFICATIONS: Prior to testing, the bridge will be checked by the judges for adherence to the specifications on page three of this document. Specification violations will be discussed with the team prior to testing. Any bridge not meeting the specifications on page three will result in judges recording zero weight held.

B. ORAL PESENTATION (50% of the total score): Teams will present a 10 minute PowerPoint presentation (a deduction is assessed for every minute under or over 10 minutes). A rubric on page 11 has been provided for the presentation as a guide.

C. PERFORMANCE (50% of the total score): Bridges will be weighed and then tested on the Pitsco structural tester. Results will be used to calculate strength-to-weight ratio.

Awards:

Teams in Beginner and Advanced TRAC chosen to attend the AASHTO Bridge Competition will compete for awards of:

First Place Team in each category: Three $400 gift cards
Second Place Team in each category: Three $300 gift cards
Third Place Team in each category: Three $200 gift cards

PREPARING FOR COMPETITION

Form a team of interested students or friends. Discuss the challenges and design specifications. Teams shall consist of three students. Each team must have at least one teacher or other adult to help and advise, though a single adult may be advisor to more than one team.

Study the rules. The individual challenge documents and the grading criteria will give important information, which must be followed if your team is to achieve the best results. Failure to adhere to the rules could lead to penalties, or even disqualification. If any of the information is not clear, please call for additional help.

Plan the timing of the project. Ensure that everyone in the team knows the date for submission of the written report, and recognizes that this means that all major development work should be finished before this date.

Keep records of meetings and working drawings carefully, and give members of the team responsibility for different sections of the final report.

Notes to Adults: TRAC would like to stress that **the work on all phases of the project is to be done by the students**. Adult assistance is to be limited to:

- Mentoring
- Basic guidance of the students
- Teaching engineering, mathematical and scientific principles applicable to the project
- Guiding students in research
- Assisting in the production of the report and preparation of the drawings
- Overseeing the manufacturing stages of the project

Guidance should be in the form of asking questions, (leading questions if necessary) to promote creative thinking by the students to identify the scientific and engineering principles involved. ***Encourage students to consult creditable web sites and other resources*** to help with the project. ***Encourage students to test and improve their designs***. A good way to begin is for each student to design and/or construct a rough prototype. Test it and make improvements.

BRIDGE COMPETITION SCHEDULE

1) Applications due **November 1, 2019**.

2) Packets will be shipped to teams by the TRAC office by **November 30, 2019**.
   Packets will include:
   - Balsa Wood
   - Wood Glue
   - Information packet

3) Proposals are due **February 14, 2020** (do not include the Bridge).

4) Notification of finalists by **March 13, 2020**.

5) Finals will be held at the AASHTO Spring Meeting in **Kansas City, Missouri, May 18-21, 2020.**

APPLICATION
2020 TRAC BRIDGE COMPETITION
Grades 9 and 10

Return to Linda Clifton by **November 1, 2019**

We have read the challenge documents and the guide to entry, and we want to register.

Number of *consecutive years* the school has competed in national competition _____

Name of Adult Advisor_____

Team Name_____
(If you do not know the team name at the time of submission, please label the teams with the school name and assign them a number 1-5)

School or Group_____

School's Street
Address_____

City_____ State _____ Zip Code _____

Work Phone_____

Cell Phone_____

Advisor's E-mail address (required)_____

NOTE: Each leader working with different teams at the same school should send a separate application form for each team. **Teams shall have three members**. Copy this form as necessary.

Return completed form to:
Linda Clifton

Email: lclifton@aashto.org

PROPOSAL ENTRY FORM
2020 TRAC BRIDGE COMPETITION
Grades 9 and 10

Return to Linda Clifton by **February 14, 2020**

Enclosed you will find the Report Portfolio for:

Name of Adult Advisor_____

Team Name_____

Team Members Name & Grade Levels (Team members must be in 11th or 12th grade)

1._____

2._____

3._____

School or Group_____

School's Street
Address_____

City_____ State _____ Zip Code _____

Work Phone_____

Cell Phone_____

Advisor's E-mail address (required)_____

Return completed form to:
Linda Clifton
Lclifton@aashto.org

GUIDELINES

2020 TRAC BRIDGE COMPETITION

Oral PowerPoint Presentation: Bridge Competition

Team Name _____

NOTE: This is a rubric for to help for the preparation of the presentation. Oral presentation has a possible score of 100 points. Each category will be judged on a scale from 1 to 20 points.

CATEGORY	20	15	10	5	0	Sub-Score
Content	Covers topic in-depth with details and examples. Subject knowledge is excellent.	Includes essential knowledge about the topic. Subject knowledge appears to be good.	Includes essential information about the topic but there are 1-2 factual errors.	Content is minimal OR there are several factual errors	Did not fulfill requirements	_____/20
Mechanics	No misspellings or grammatical errors.	Three or fewer misspellings and/or mechanical errors	Four misspellings and/or grammatical errors.	More than 4 errors in spelling or grammar.	Did not fulfill requirements	_____/20
Organization	Content is well organized using headings or bulleted lists to group related material.	Uses headings or bulleted lists to organize, but the overall organization of topics appears flawed.	Content is logically organized for the most part.	There was no clear or logical organizational structure, just lots of facts.	Did not fulfill requirements	_____/20
Presentation	Interesting, well-rehearsed with smooth delivery that holds audience attention.	Relatively interesting, rehearsed with a fairly smooth delivery that usually holds audience	Delivery not smooth, but able to hold audience attention most of the time.	Delivery not smooth and audience attention lost.	Did not fulfill requirements	_____/20
Attractiveness	Makes excellent use of font, color, graphics, effects, etc. to enhance the presentation.	Makes good use of font, color, graphics, effects, etc. to enhance to presentation.	Makes use of font, color, graphics, effects, etc. but occasionally these detract from the presentation	Use of font, color, graphics, effects etc. but these often distract from the presentation content.	Did not fulfill requirements	_____/20
					Total Sub-Score	_____/100
					Each Minute Under/Over 10 Minutes: (-10)	_____
					TOTAL SCORE	_____

2020 TRAC BRIDGE COMPETITION
Suggestions and Helpful Hints

1. Students should be prepared for questions at the end of the presentation.
   These questions may be concentrated in the following topics. However, note that the judges are free to ask any question about any topic. Therefore, each team should be prepared.
   a) Choice of design
   b) Civil engineering careers related to bridges
   c) Safety
   d) Impacts of bridges
   e) Lessons learned

2. Stay organized and keep track of time limits.

3. If you have a question, ASK. You can contact Linda Clifton at *lclifton@aashto.org*.

4. Contact your DOT engineers. They will answer many of your questions.

5. Check out other bridges in your area or around the world

6. **Include detailed information in the team portfolio. Remember, your portfolio is what determines if your team is selected to come to national competition.**

7. RESEARCH

TRAC & RIDES

Getting started with Bentley's STUDENTserver:

Faculty and students must first create accounts, using the following **School Code** to set up an individual account:

ceUIppmq/CV1ia8npF48K6sfC6t3hqy0JPihQw5FgQ/XzFpJ0krLiA==

Visit STUDENTserver at http://apps.bentley.com/StudentServer and click JOIN NOW

Create your account:

1. Add your School Code to that field, as requested in the registration form.
2. Add your personal information in the other form fields.
3. Submit the form, and an Email will be sent to you from Bentley for further verification. (If you do not see email within a few minutes check you spam/junk folder)

Verify your account:

Click the link in the account verification Email to activate your STUDENTserver account.

Once you verify your new account, you can log in and access all that STUDENTserver has to offer.

Download the software:

- Go to the "download" page on STUDENTserver.
- You can search for the application you want, or browse the options and filter by brand, product line, language, and other options.
- Take note of the "site activation key;" this is what you'll use to activate the product when prompted during the installation process.
- When you've found the application you want, click on the "All Downloads" tab under the product description and find the latest version with your preferred language and download the application by clicking on the green download icon on the right.
- Once the installer is downloaded, open it and follow the instructions. When the product needs to be activated, use the site activation key as described above.

Access training:

- Go to the "Leaning" page on STUDENTserver.
- Browse the product categories to find the application for which you want training.
- Click on the blue product name to follow the link to the learning path page on LEARNserver, our training access point.
- Click on the "find training" below the course you want to open up the course materials for download or viewing.
- Once you have completed a training course, you can view and print out transcripts for that course in the "certificate and transcript" page of STUDENTserver.
- To view a list of learning paths recommended for students, go to our learning paths Communities page here.

Get connected:

- Join our Academic Programs community on Bentley Communities here to get view information on upcoming events, suggested training opportunities, design competitions, and more.
- Join our facebook page here.
- Visit our YouTube page to view training views, walkthroughs, and more.

Our library of on-demand videos can be found here and can be sorted by product and language.

Bentley step by step videos https://www.michigan.gov/mdot/0,4616,7-151-9623_38029_38059_41397-394779--,00.html