Part Two: Evaluation Forms for Precast Product Verification by Non-Destructive and Destructive Testing

Tennessee Department of Transportation

Table of Contents

A. Square & Rectangular Concrete Data Sheet-Drainage Catch Basin 2

B. Square Concrete Data Sheet-Drainage Manhole 8

C. Endwall Data Sheet 14

D. Square Concrete Data Sheet-Drainage Junction Box 17

E. Square Concrete Data Sheet-Drainage Spring Box 23

F. Standard Precast Circular Concrete Data Sheet-Drainage Catch Basin 29

G. Standard Precast Circular Concrete Data Sheet-Drainage Manhole 32

H. Standard Precast Circular Concrete Data Sheet-Drainage Junction Box.....35

I. Standard Precast Circular Concrete Data Sheet-Drainage Spring Box 38

A. Square & Rectangular Concrete Data Sheet-Drainage Catch Basin

A.1 VERIFICATION OF DIMENSIONAL MEASUREMENT

Region:_____Date of Inspection:_____

Manufacturer Name:_____Manufacturer or Project Location:_____

Type of Structure:_____Contract No.:_____

Date Produced:_____Standard Drawing No.:_____

Verification of Measurements:

NOT TO SCALE

Opening Length 1._____

Opening Width 2._____

Wall Thickness

_____

Height

_____

Inlet Diameter
Horizontal/Vertical

1._____

2._____

Outlet Diameter
Horizontal/Vertical

1._____

2._____

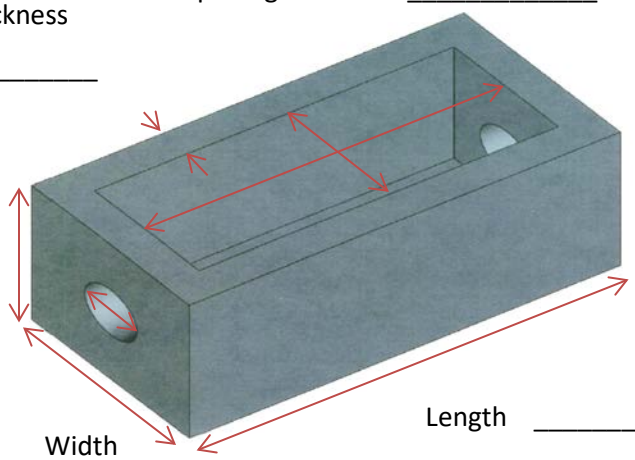

Length _____

Width

_____

Note: If selected structure is different from above, sketch and verify measurements below

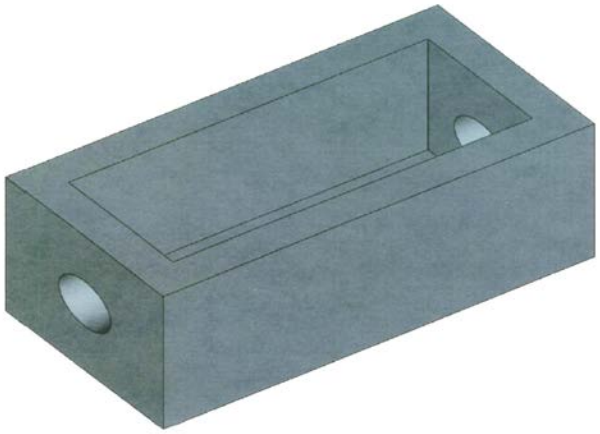

Note: All Measurements shall be reported to 1/16”

A.2 VERIFICATION OF CONCRETE STRENGTH (SCHMIDT HAMMER CALCULATION)

Blow No.	Rebound	Blow No.	Rebound
1		6	
2		7	
3		8	
4		9	
5		10	

REBOUND AVERAGE:_____

Blow No.	Rebound	Blow No.	Rebound
1		6	
2		7	
3		8	
4		9	
5		10	

REBOUND AVERAGE: _____

COMPRESSIVE STRENGTH: _____

Note: Eliminate values higher or lower than 6 units of first average rebounds. Refer to Part 1 Section 3.0.

A.3 POSSIBLE LOCATION OF SAW CUTS

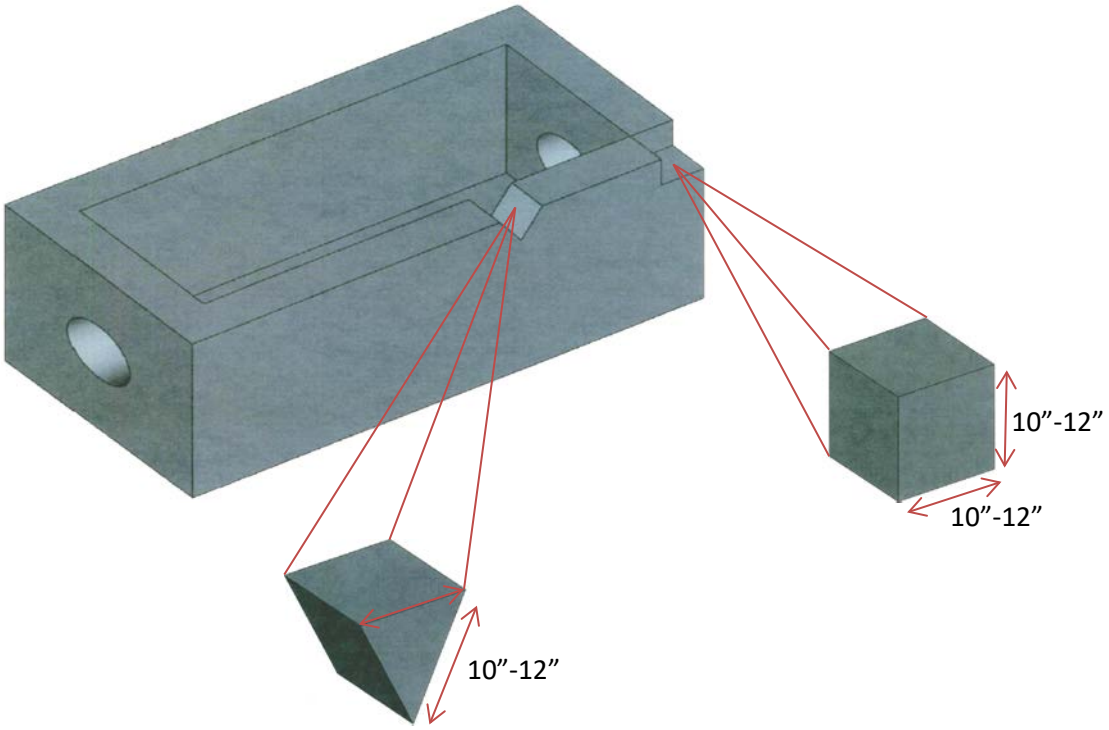

A.4 CONFIRM REBAR SIZE, SPACING, AND COVERAGE

DOCUMENT ALL MEASUREMENTS BELOW

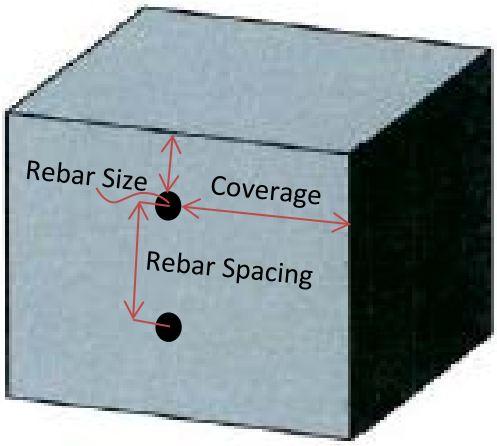

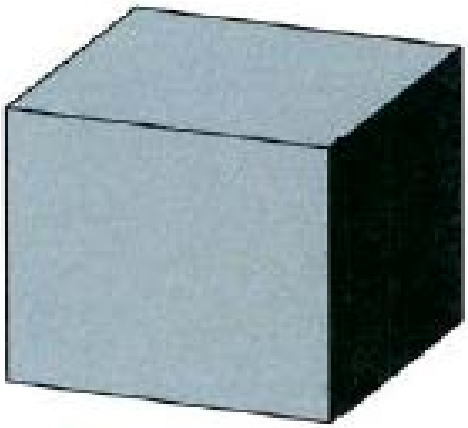

Example

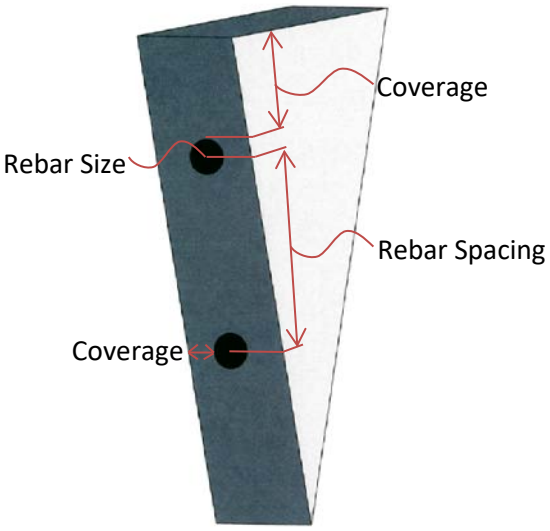

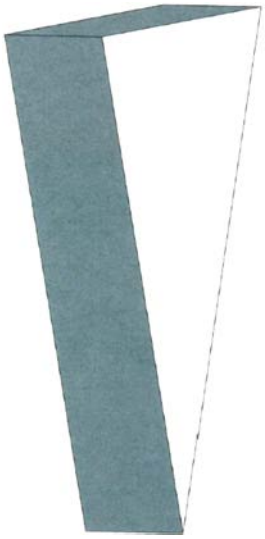

Example

Does structure meet specifications? **YES** ☐ **NO** ☐

Producer Inspector(s):_____

TDOT Regional Inspector(s):_____

Comments:_____

A.5 VERIFICATION OF DIMENSIONAL MEASUREMENT

Verification of Measurements:

NOT TO SCALE

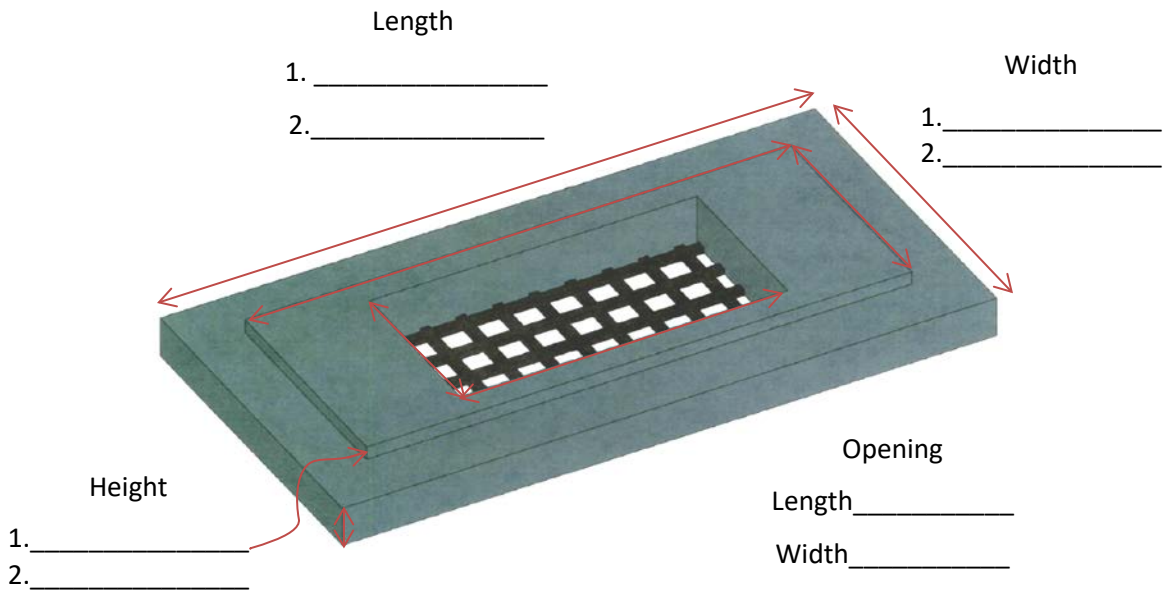

Note: If selected structure is different from above, sketch and verify measurements below

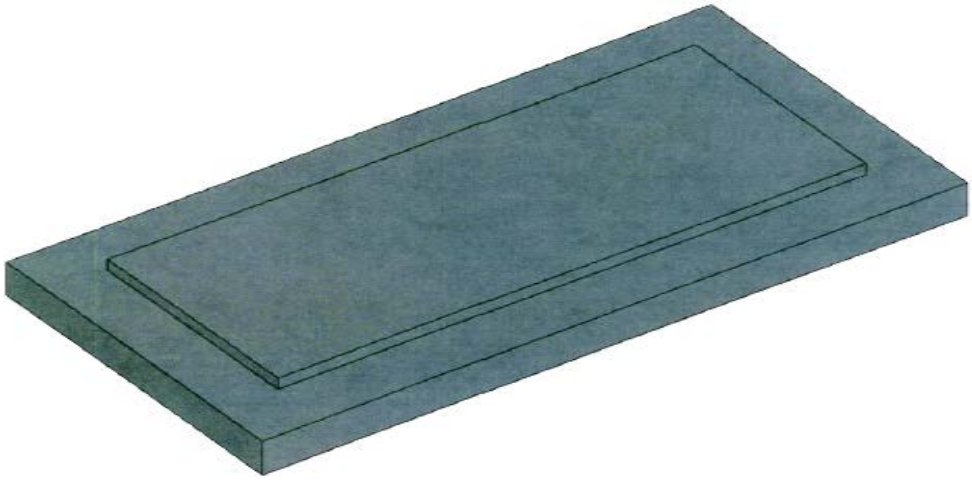

Note: All Measurements shall be reported to 1/16”

A.6 VERIFICATION OF CONCRETE STRENGTH (SCHMIDT HAMMER CALCULATION)

Blow No.	Rebound	Blow No.	Rebound
1		6	
2		7	
3		8	
4		9	
5		10	

Blow No.	Rebound	Blow No.	Rebound
1		6	
2		7	
3		8	
4		9	
5		10	

REBOUND AVERAGE:_____ REBOUND AVERAGE: _____

COMPRESSIVE STRENGTH: _____

Note: Eliminate values higher or lower than 6 units of first average rebounds. Refer to Part 1 Section 3.0.

A.7 POSSIBLE LOCATION OF SAW CUTS

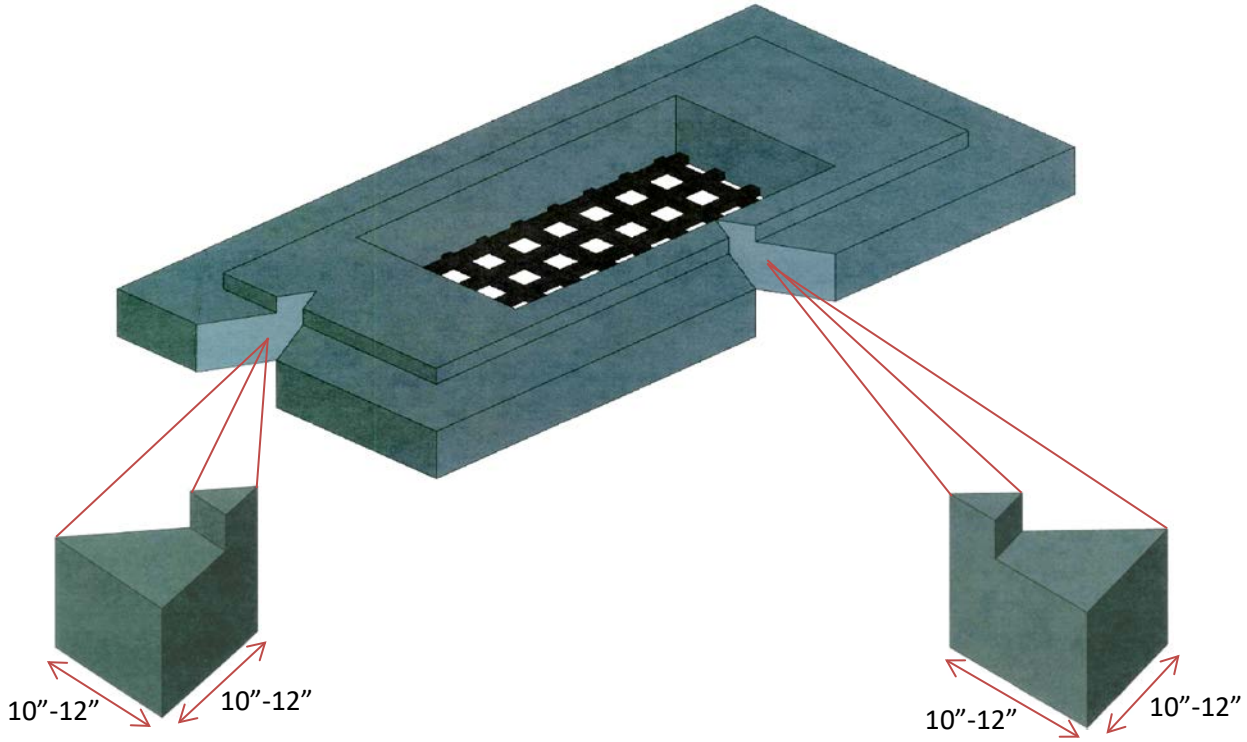

A.8 CONFIRM REBAR SIZE, SPACING, AND COVERAGE

DOCUMENT ALL MEASUREMENTS BELOW

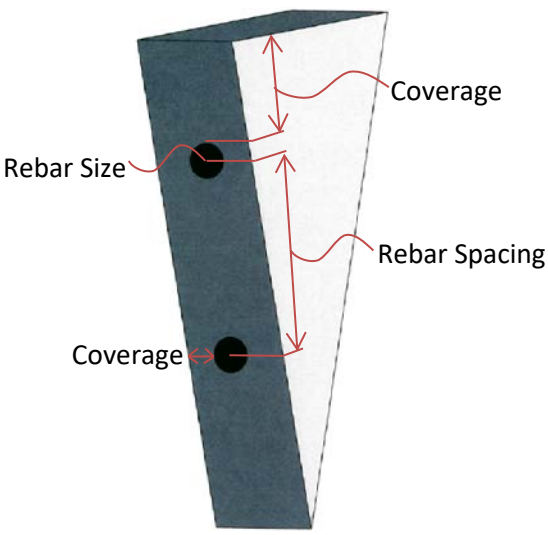

Example

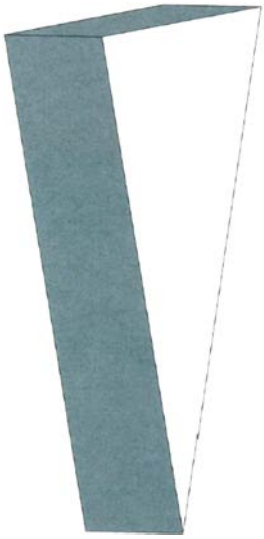

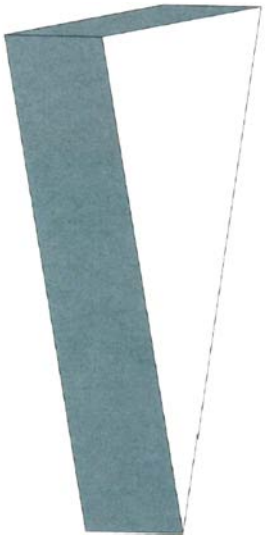

Does structure meet specifications? **YES** ☐ **NO** ☐

Producer Inspector(s):_____

TDOT Regional Inspector(s):_____

Comments:_____

B. Square Concrete Data Sheet-Drainage Manhole

B.1 VERIFICATION OF DIMENSIONAL MEASUREMENT

Region:_____Date of Inspection:_____

Manufacturer Name:_____Manufacturer or Project Location:_____

Type of Structure:_____Contract No.:_____

Date Produced:_____Standard Drawing No.:_____

Verification of Measurements:

NOT TO SCALE

Wall Thickness

_____

Opening Length 1._____

Opening Width 2._____

Outlet Diameter
Horizontal/Vertical

1._____

2._____

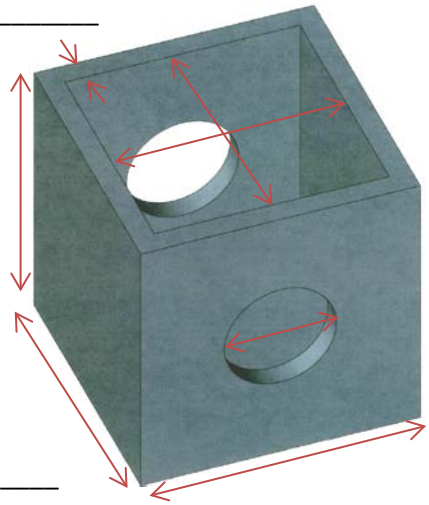

Height

_____

Inlet Diameter
Horizontal/Vertical

1._____

2._____

Width

_____

Length _____

Note: If selected structure is different from above, sketch and verify measurements below

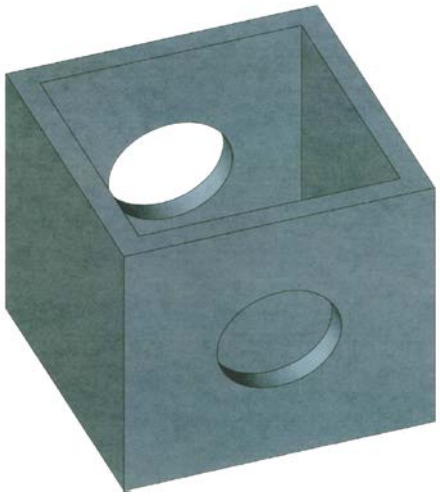

Note: All Measurements shall be reported to 1/16”

B.2 VERIFICATION OF CONCRETE STRENGTH (SCHMIDT HAMMER CALCULATION)

Blow No.	Rebound	Blow No.	Rebound
1		6	
2		7	
3		8	
4		9	
5		10	

REBOUND AVERAGE:_____

Blow No.	Rebound	Blow No.	Rebound
1		6	
2		7	
3		8	
4		9	
5		10	

REBOUND AVERAGE: _____

COMPRESSIVE STRENGTH: _____

Note: Eliminate values higher or lower than 6 units of first average rebounds. Refer to Part 1 Section 3.0.

B.3 POSSIBLE LOCATION OF SAW CUTS

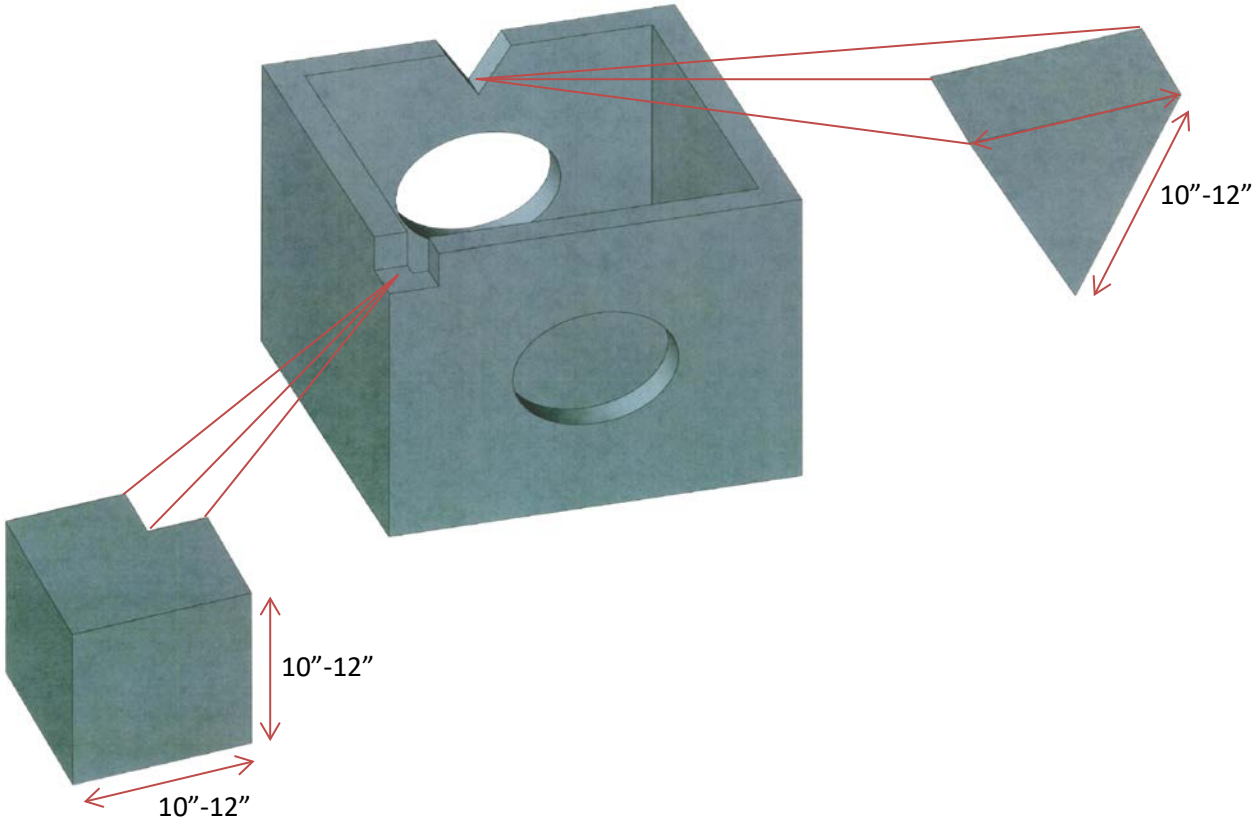

B.4 CONFIRM REBAR SIZE, SPACING, AND COVERAGE

DOCUMENT ALL MEASUREMENTS BELOW

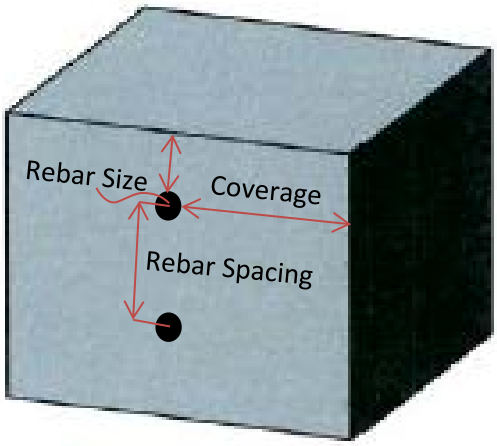

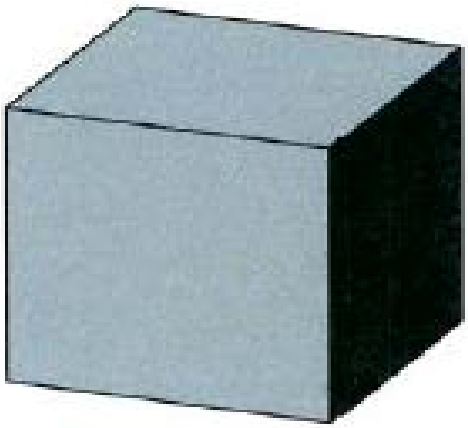

Example

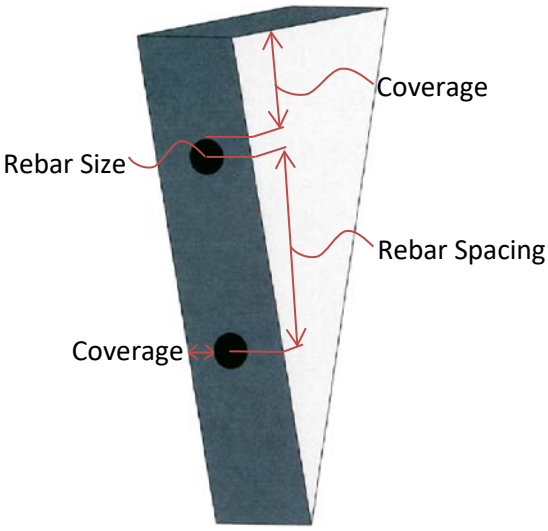

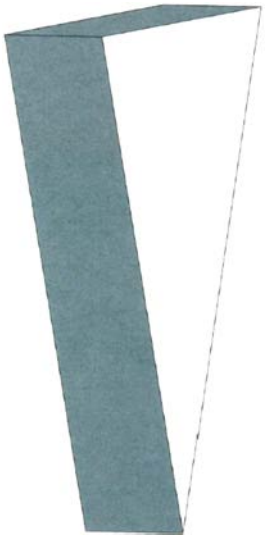

Example

Does structure meet specifications? **YES** ☐ **NO** ☐

Producer Inspector(s):_____

TDOT Regional Inspector(s):_____

Comments:_____

B.5 VERIFICATION OF DIMENSIONAL MEASUREMENT

Verification of Measurements:

NOT TO SCALE

Length

1. _____

2._____

Width

1._____

2._____

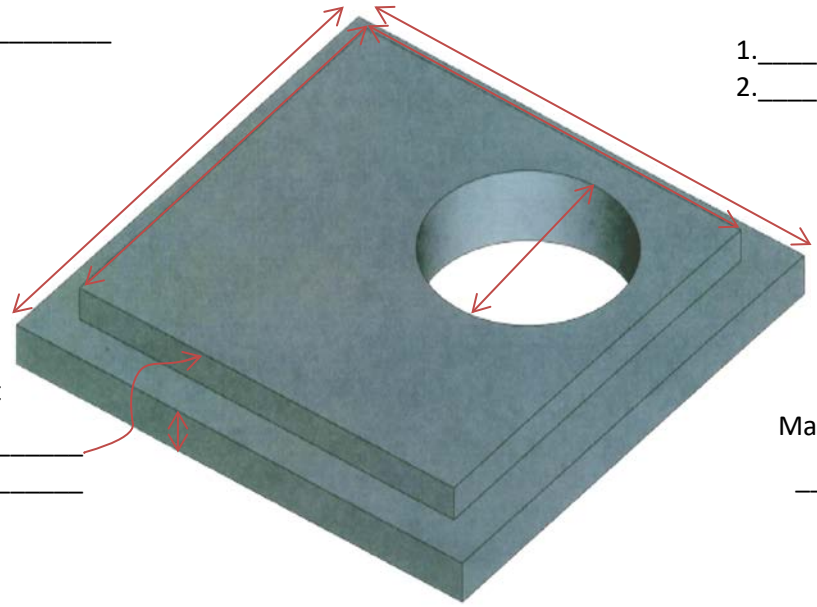

Height

1._____

2._____

Manhole Diameter

_____

Note: If selected structure is different from above, sketch and verify measurements below

Note: All Measurements shall be reported to 1/16”

B.6 VERIFICATION OF CONCRETE STRENGTH (SCHMIDT HAMMER CALCULATION)

Blow No.	Rebound	Blow No.	Rebound
1		6	
2		7	
3		8	
4		9	
5		10	

Blow No.	Rebound	Blow No.	Rebound
1		6	
2		7	
3		8	
4		9	
5		10	

REBOUND AVERAGE:_____ REBOUND AVERAGE: _____

COMPRESSIVE STRENGTH: _____

Note: Eliminate values higher or lower than 6 units of first average rebounds. Refer to Part 1 Section 3.0.

B.7 POSSIBLE LOCATION OF SAW CUTS

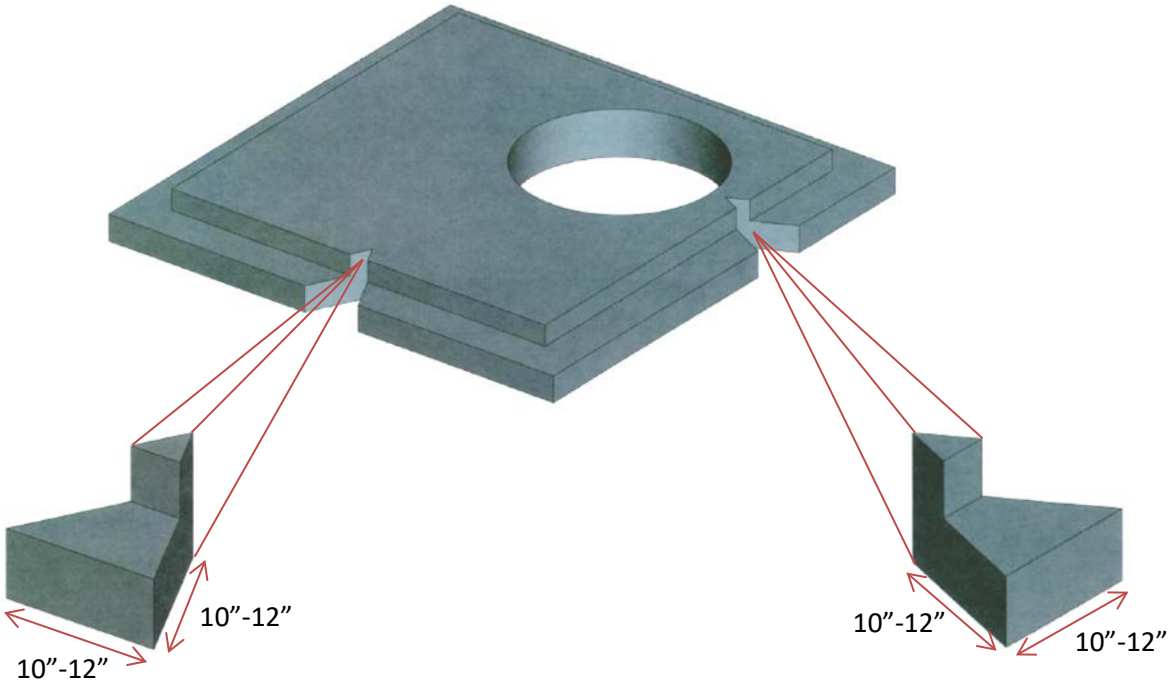

B.8 CONFIRM REBAR SIZE, SPACING, AND COVERAGE

DOCUMENT ALL MEASUREMENTS BELOW

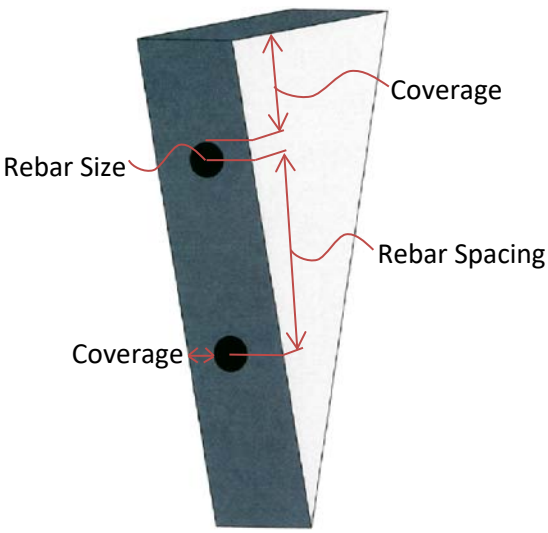

Example

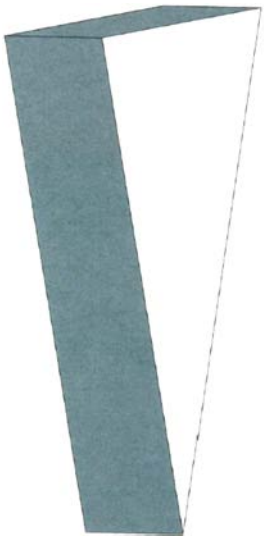

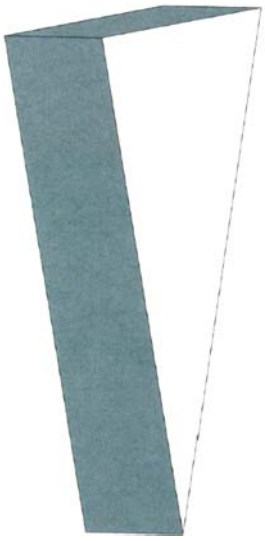

Does structure meet specifications? **YES** ☐ **NO** ☐

Producer Inspector(s):_____

TDOT Regional Inspector(s):_____

Comments:_____

C. Endwall Data Sheet

C.1 VERIFICATION OF DIMENSIONAL MEASUREMENT

Region:_____ Date of Inspection:_____

Manufacturer Name:_____ Manufacturer or Project Location:_____

Type of Structure:_____ Contract No.:_____

Date Produced:_____ Standard Drawing No.:_____

Verification of Measurements:

NOT TO SCALE

Head Wall Thickness

_____

Height

_____

Inlet Diameter
Horizontal/Vertical

1._____

2._____

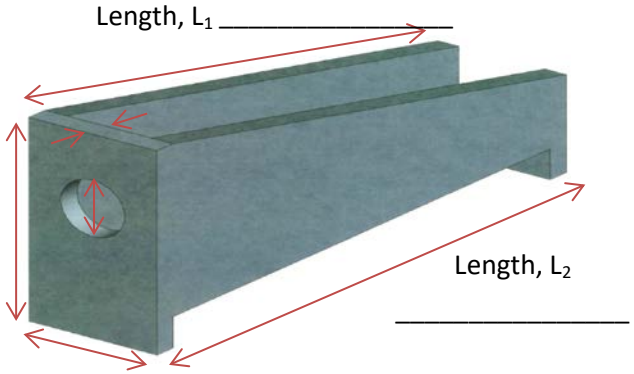

Back View of Endwall

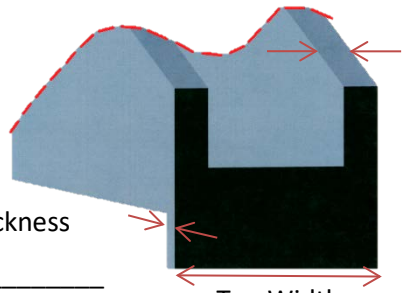

Sidewall Thickness

_____

Toe Thickness

_____

Toe Width

_____

Note: If selected structure is different from above, sketch and verify measurements below

Back View of Endwall

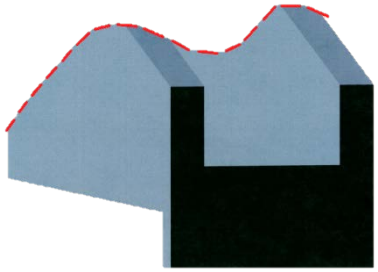

Note: All measurements shall be reported to 1/16”

C.2 VERIFICATION OF CONCRETE STRENGTH (SCHMIDT HAMMER CALCULATION)

Blow No.	Rebound	Blow No.	Rebound
1		6	
2		7	
3		8	
4		9	
5		10	

REBOUND AVERAGE:_____

Blow No.	Rebound	Blow No.	Rebound
1		6	
2		7	
3		8	
4		9	
5		10	

REBOUND AVERAGE: _____

COMPRESSIVE STRENGTH: _____

Note: Eliminate values higher or lower than 6 units of first average rebounds. Refer to Part 1 Section 3.0.

C.3 POSSIBLE LOCATION OF SAW CUTS

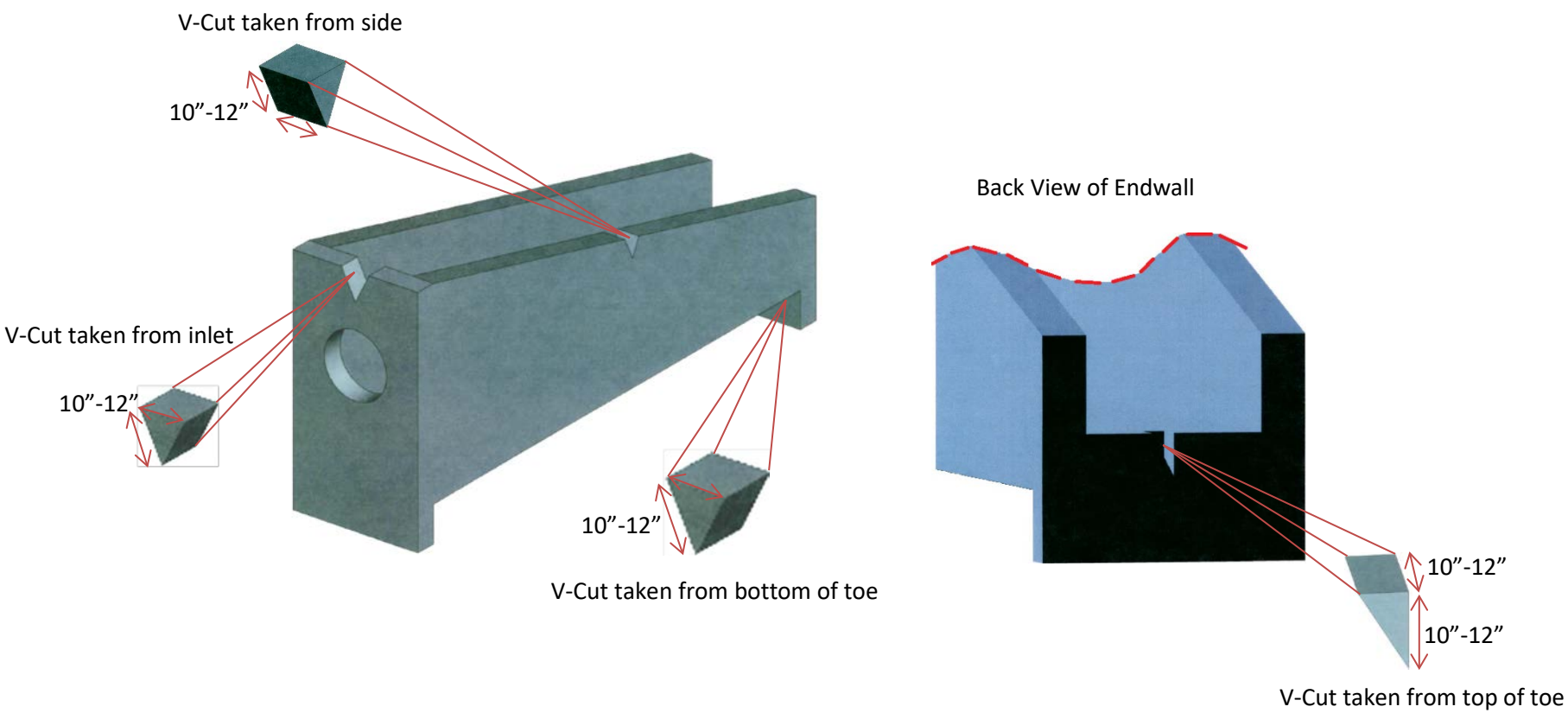

C.4 CONFIRM REBAR SIZE, SPACING, AND COVERAGE

DOCUMENT ALL MEASUREMENTS BELOW

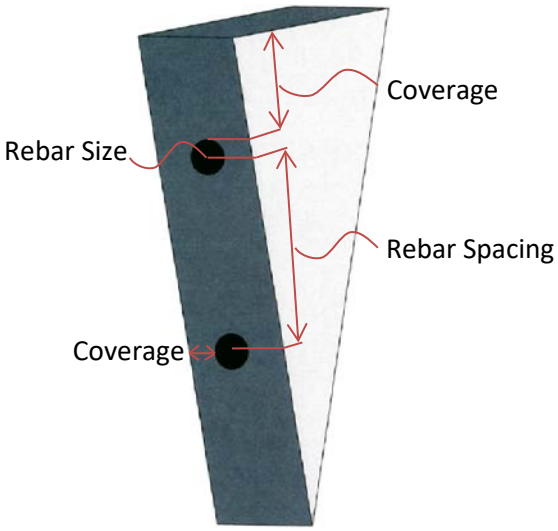

Example

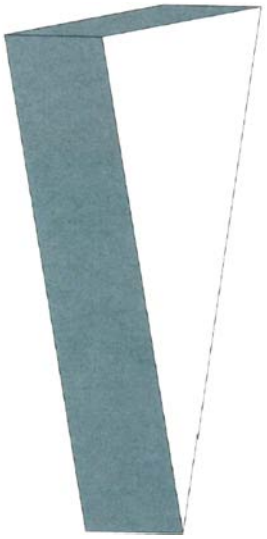

Cut No.1

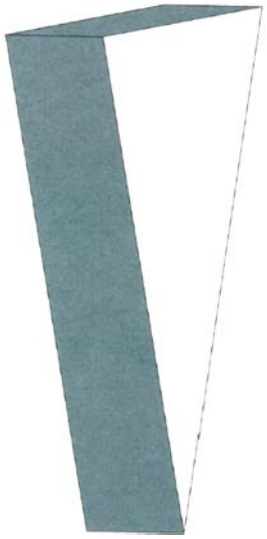

Cut No.2

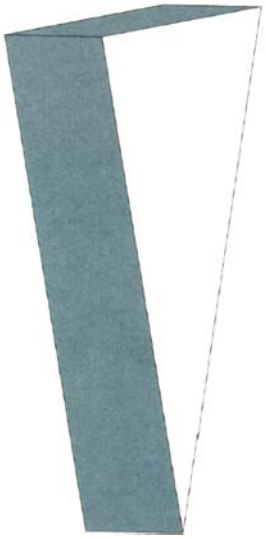

Cut No.3

Does structure meet specifications? **YES** ☐ **NO** ☐

Producer Inspector(s):_____

TDOT Regional Inspector(s):_____

Comments:_____

D. Square Concrete Data Sheet-Drainage Junction Box

D.1 VERIFICATION OF DIMENSIONAL MEASUREMENT

Region:_____Date of Inspection:_____

Manufacturer Name:_____Manufacturer or Project Location:_____

Type of Structure:_____Contract No.:_____

Date Produced:_____Standard Drawing No.:_____

Verification of Measurements:

NOT TO SCALE

Wall Thickness

_____

Opening Length 1._____

Opening Width 2._____

Outlet Diameter
Horizontal/Vertical

1._____

2._____

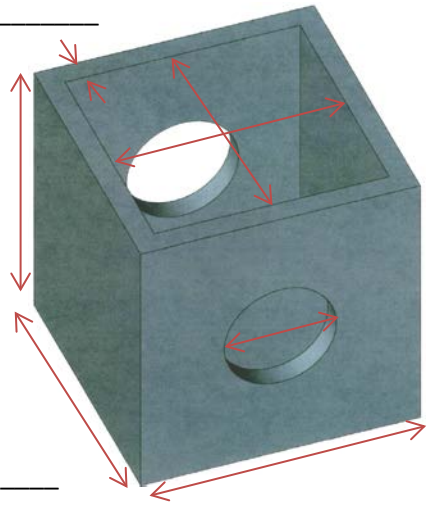

Inlet Diameter
Horizontal/Vertical

1._____

2._____

Height

_____

Width

_____

Length _____

Note: If selected structure is different from above, sketch and verify measurements below

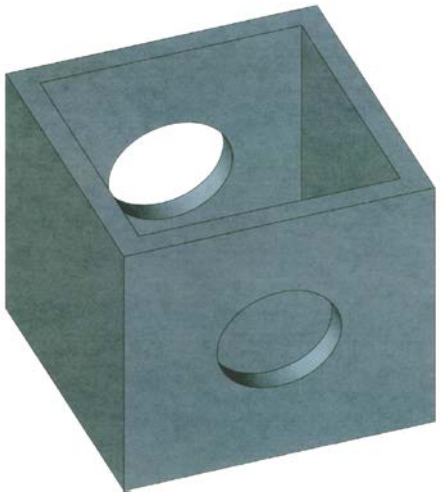

Note: All Measurements shall be reported to 1/16”

D.2 VERIFICATION OF CONCRETE STRENGTH (SCHMIDT HAMMER CALCULATION)

Blow No.	Rebound	Blow No.	Rebound
1		6	
2		7	
3		8	
4		9	
5		10	

REBOUND AVERAGE:_____

Blow No.	Rebound	Blow No.	Rebound
1		6	
2		7	
3		8	
4		9	
5		10	

REBOUND AVERAGE: _____

COMPRESSIVE STRENGTH: _____

Note: Eliminate values higher or lower than 6 units of first average rebounds. Refer to Part 1 Section 3.0.

D.3 POSSIBLE LOCATION OF SAW CUTS

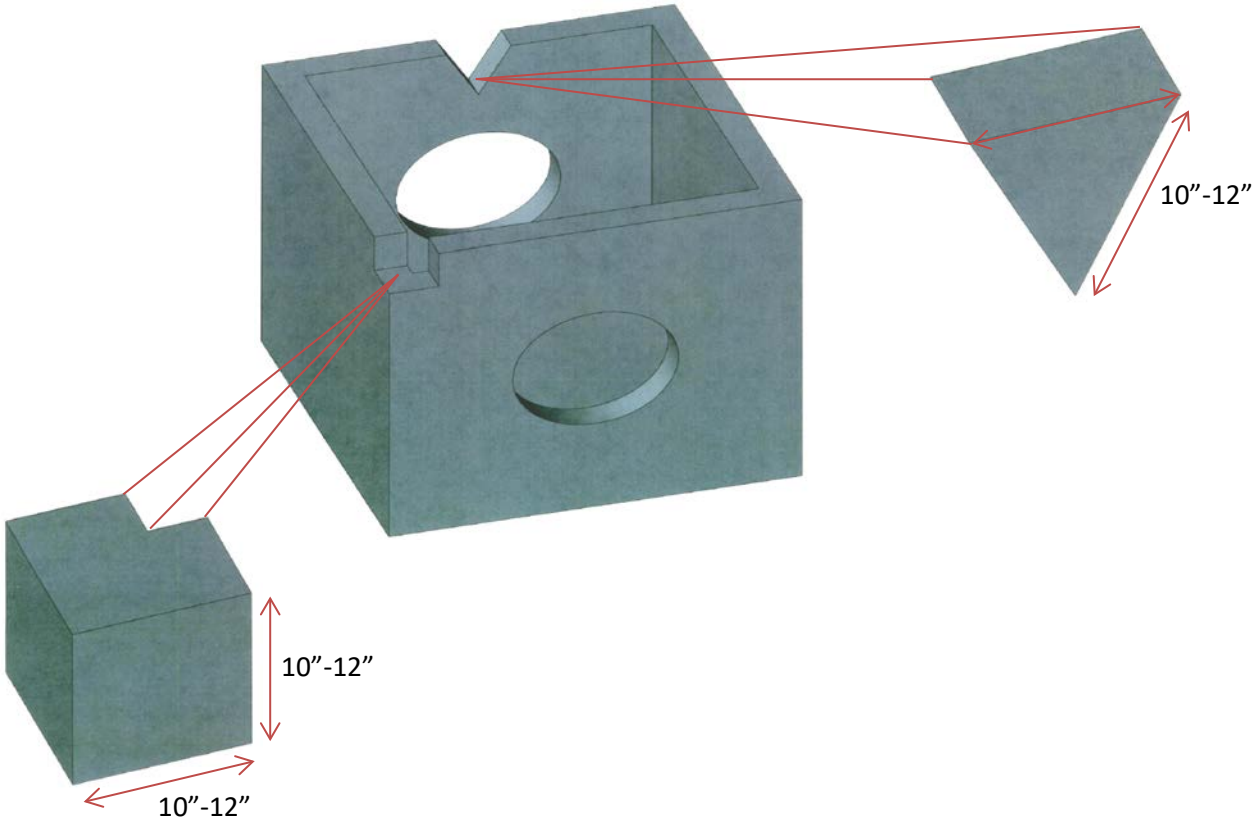

D.4 CONFIRM REBAR SIZE, SPACING, AND COVERAGE

DOCUMENT ALL MEASUREMENTS BELOW

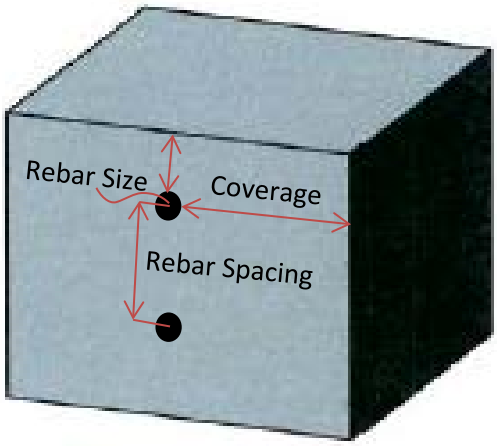

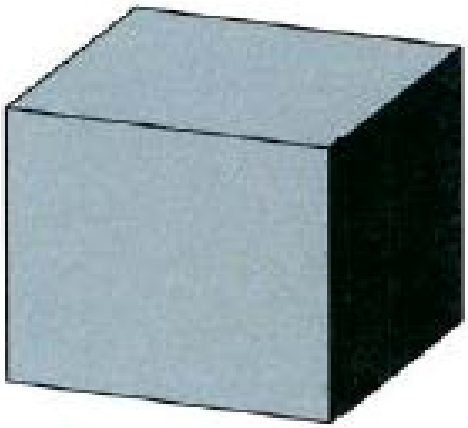

Example

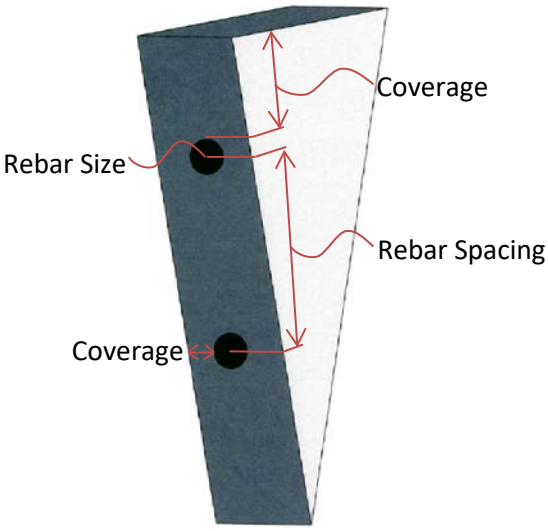

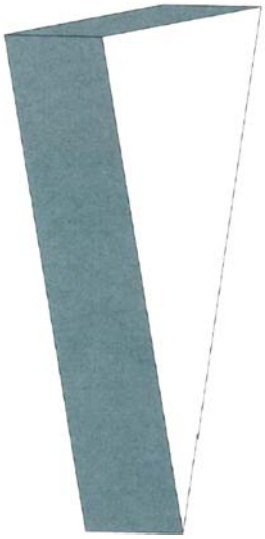

Example

Does structure meet specifications? **YES** ☐ **NO** ☐

Producer Inspector(s):_____

TDOT Regional Inspector(s):_____

Comments:_____

D.5 VERIFICATION OF DIMENSIONAL MEASUREMENT

Verification of Measurements:

NOT TO SCALE

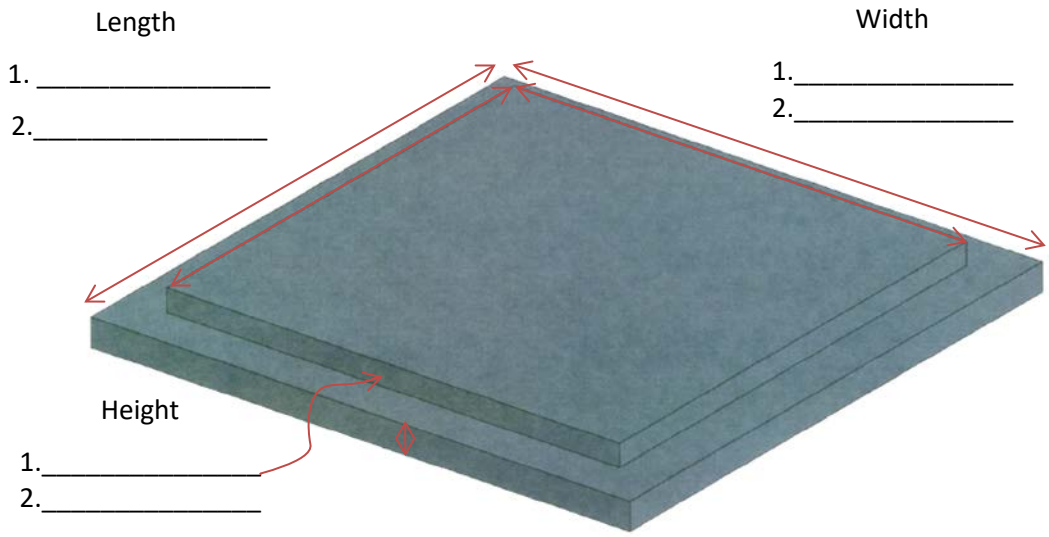

Note: If selected structure is different from above, sketch and verify measurements below

Note: All Measurements shall be reported to 1/16”

D.6 VERIFICATION OF CONCRETE STRENGTH (SCHMIDT HAMMER CALCULATION)

Blow No.	Rebound	Blow No.	Rebound
1		6	
2		7	
3		8	
4		9	
5		10	

Blow No.	Rebound	Blow No.	Rebound
1		6	
2		7	
3		8	
4		9	
5		10	

REBOUND AVERAGE:_____ REBOUND AVERAGE: _____

COMPRESSIVE STRENGTH: _____

Note: Eliminate values higher or lower than 6 units of first average rebounds. Refer to Part 1 Section 3.0.

D.7 POSSIBLE LOCATION OF SAW CUTS

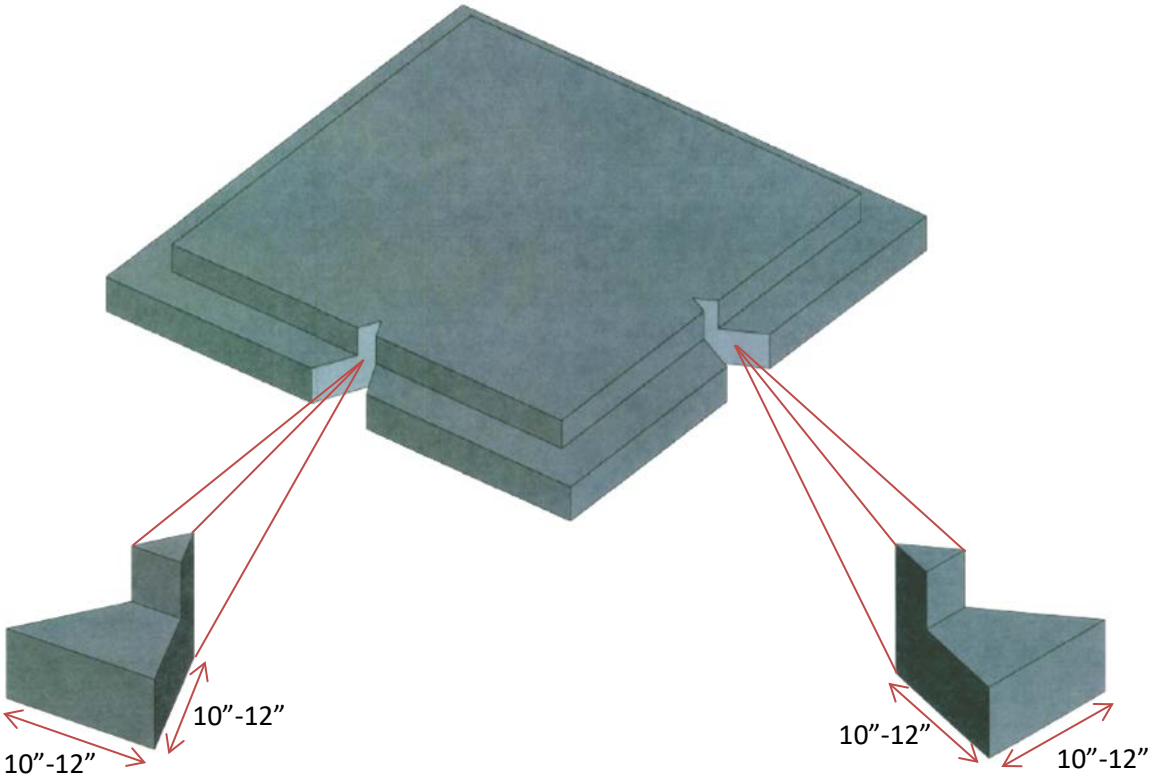

D.8 CONFIRM REBAR SIZE, SPACING, AND COVERAGE

DOCUMENT ALL MEASUREMENTS BELOW

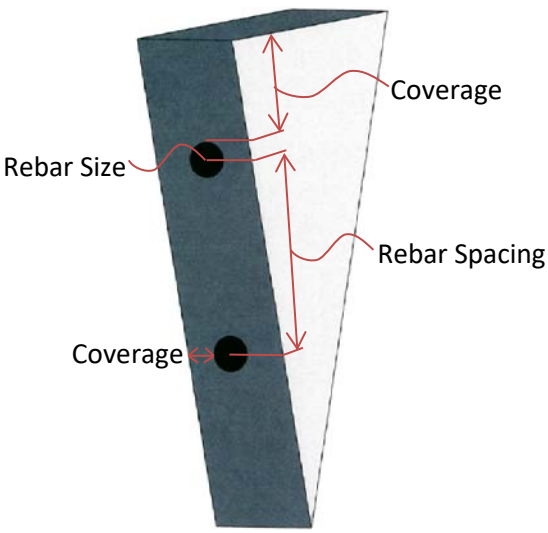

Example

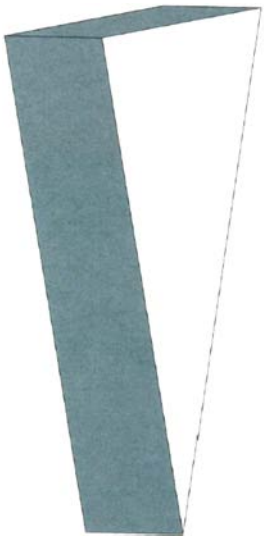

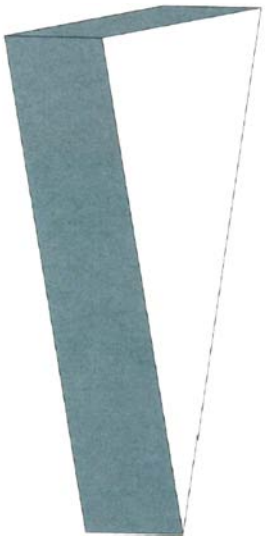

Does structure meet specifications? **YES** ☐ **NO** ☐

Producer Inspector(s):_____

TDOT Regional Inspector(s):_____

Comments:_____

E. Square Concrete Data Sheet-Drainage Spring Box

E.1 VERIFICATION OF DIMENSIONAL MEASUREMENT

Region:_____Date of Inspection:_____

Manufacturer Name:_____Manufacturer or Project Location:_____

Type of Structure:_____Contract No.:_____

Date Produced:_____Standard Drawing No.:_____

Verification of Measurements:

NOT TO SCALE

Wall Thickness

_____

Opening Length 1._____

Opening Width 2._____

Inlet Diameter
Horizontal/Vertical

1._____

2._____

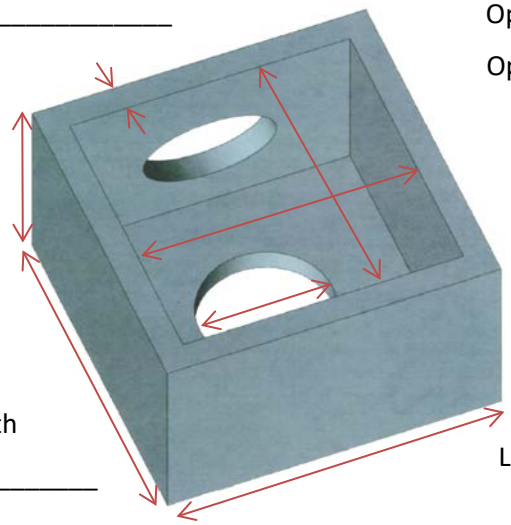

Outlet Diameter
Horizontal/Vertical

1._____

2._____

Height

_____

Width

_____

Length _____

Note: If selected structure is different from above, sketch and verify measurements below

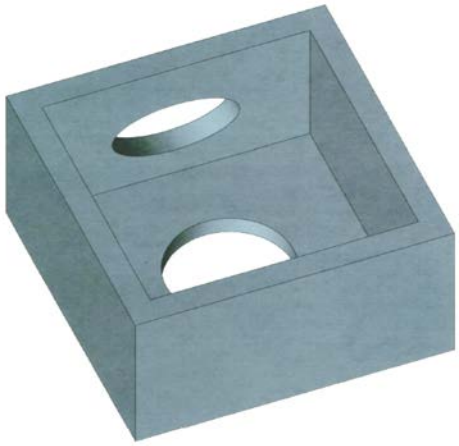

Note: All Measurements shall be reported to 1/16”

E.2 VERIFICATION OF CONCRETE STRENGTH (SCHMIDT HAMMER CALCULATION)

Blow No.	Rebound	Blow No.	Rebound
1		6	
2		7	
3		8	
4		9	
5		10	

REBOUND AVERAGE:_____

Blow No.	Rebound	Blow No.	Rebound
1		6	
2		7	
3		8	
4		9	
5		10	

REBOUND AVERAGE: _____

COMPRESSIVE STRENGTH: _____

Note: Eliminate values higher or lower than 6 units of first average rebounds. Refer to Part 1 Section 3.0.

E.3 POSSIBLE LOCATION OF SAW CUTS

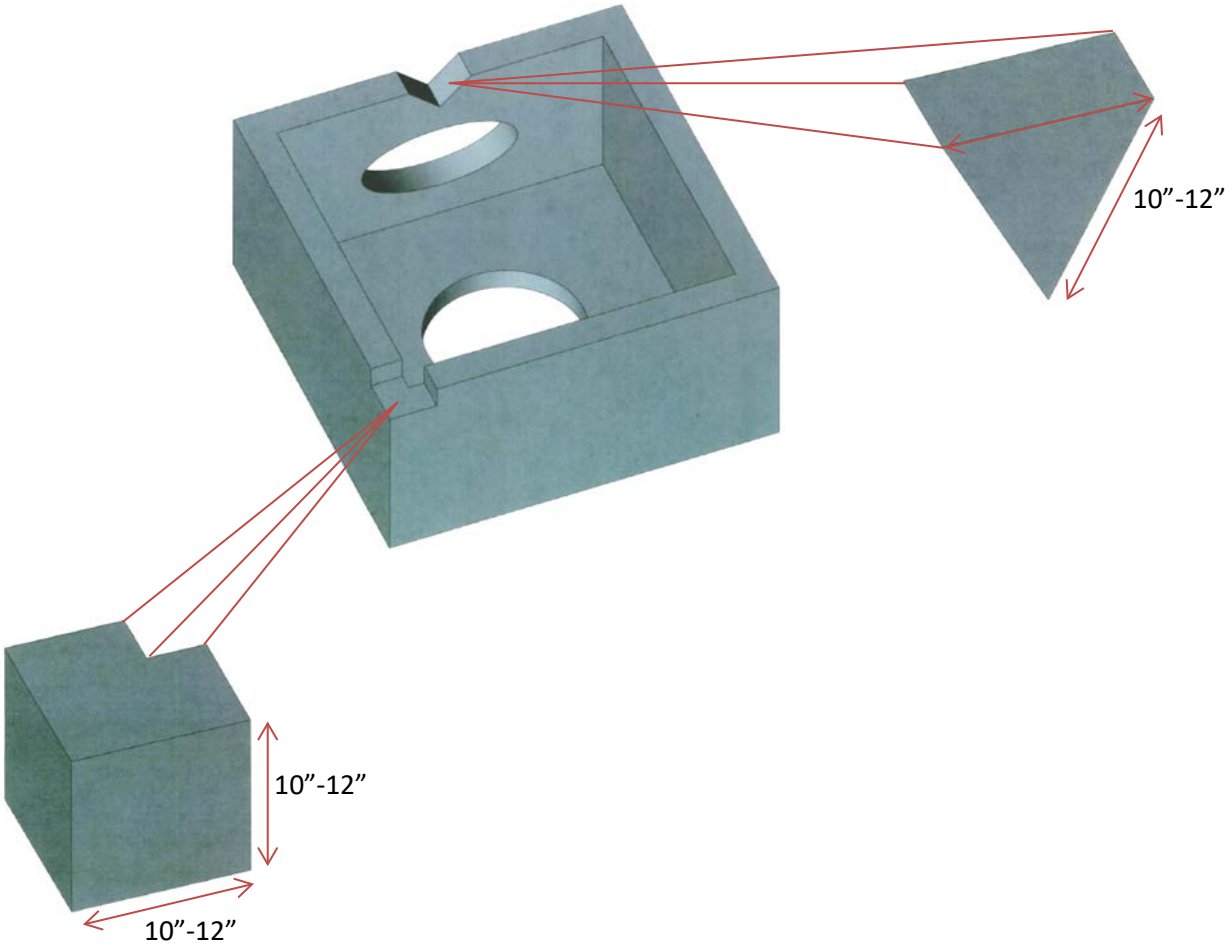

E.4 CONFIRM REBAR SIZE, SPACING, AND COVERAGE

DOCUMENT ALL MEASUREMENTS BELOW

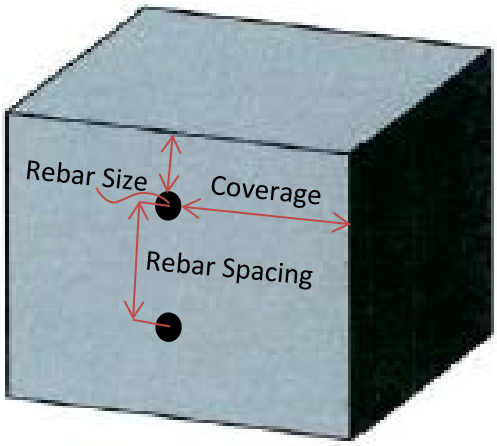

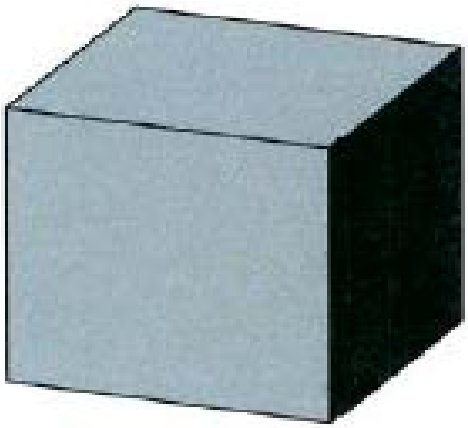

Example

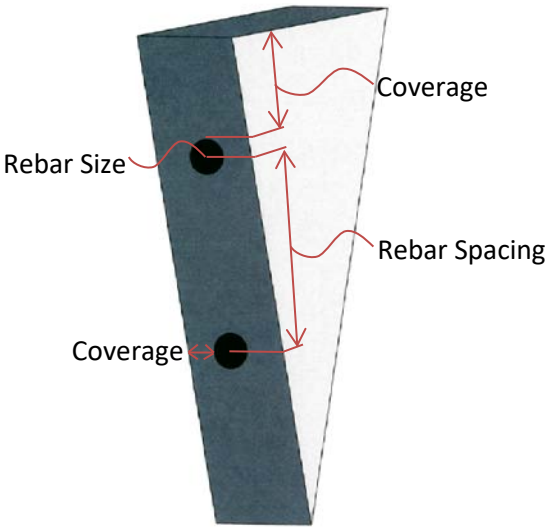

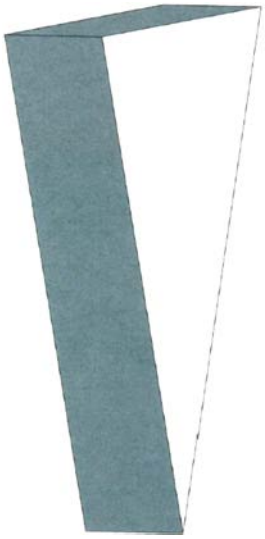

Example

Does structure meet specifications? **YES** ☐ **NO** ☐

Producer Inspector(s):_____

TDOT Regional Inspector(s):_____

Comments:_____

E.5 VERIFICATION OF DIMENSIONAL MEASUREMENT

Verification of Measurements:

NOT TO SCALE

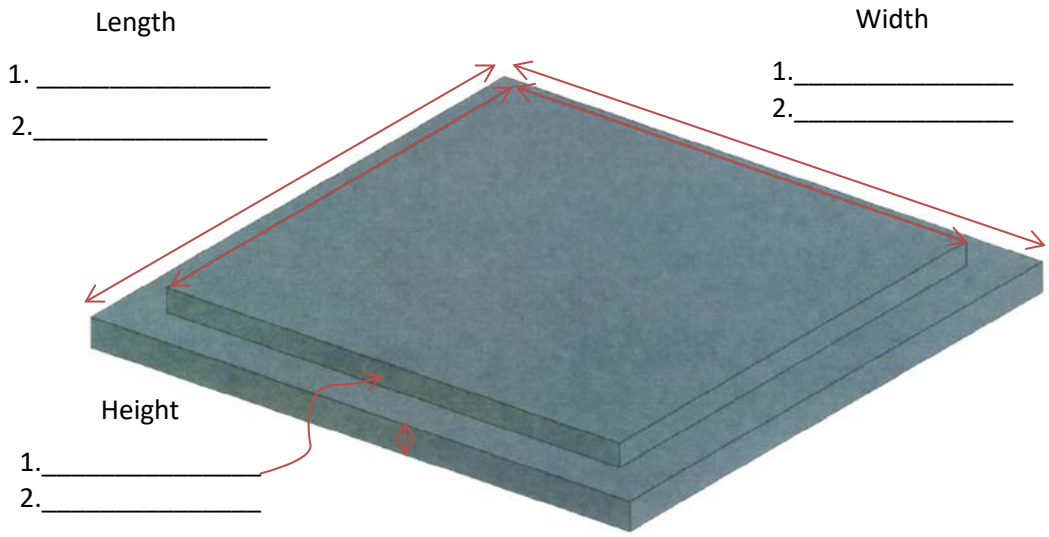

Note: If selected structure is different from above, sketch and verify measurements below

Note: All Measurements shall be reported to 1/16”

E.6 VERIFICATION OF CONCRETE STRENGTH (SCHMIDT HAMMER CALCULATION)

Blow No.	Rebound	Blow No.	Rebound
1		6	
2		7	
3		8	
4		9	
5		10	

Blow No.	Rebound	Blow No.	Rebound
1		6	
2		7	
3		8	
4		9	
5		10	

REBOUND AVERAGE:_____ REBOUND AVERAGE: _____

COMPRESSIVE STRENGTH: _____

Note: Eliminate values higher or lower than 6 units of first average rebounds. Refer to Part 1 Section 3.0.

E.7 POSSIBLE LOCATION OF SAW CUTS

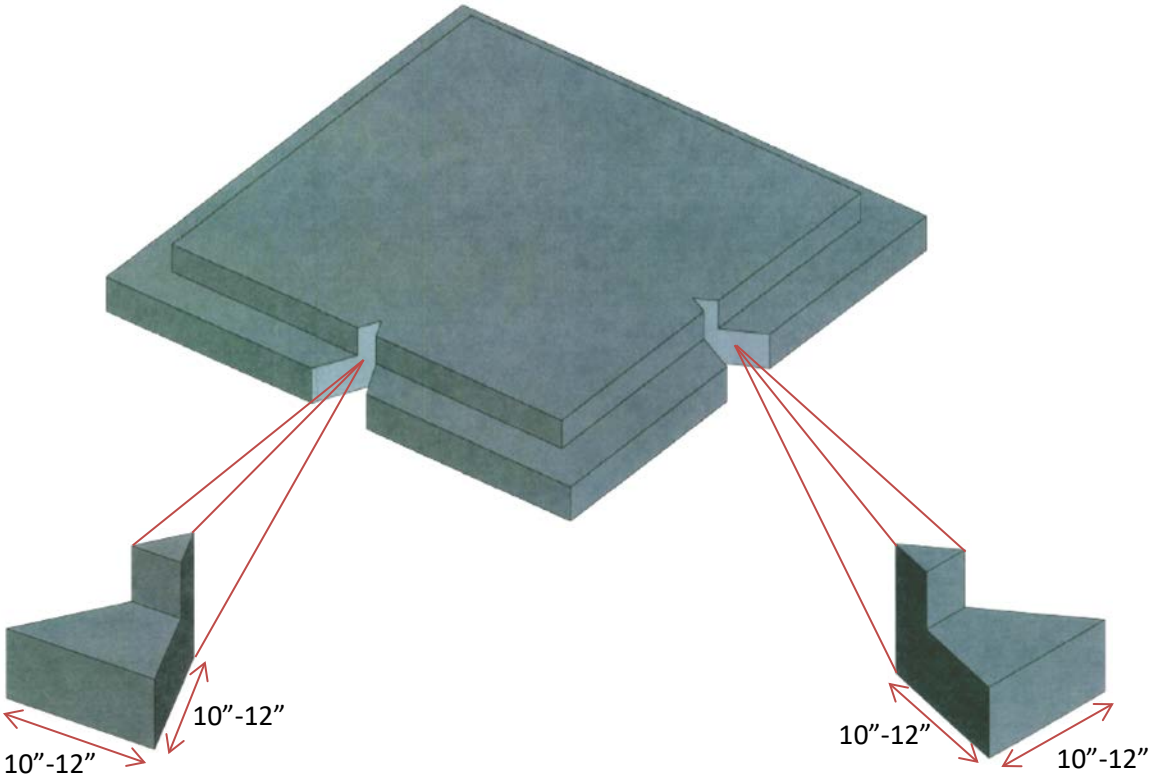

E.8 CONFIRM REBAR SIZE, SPACING, AND COVERAGE

DOCUMENT ALL MEASUREMENTS BELOW

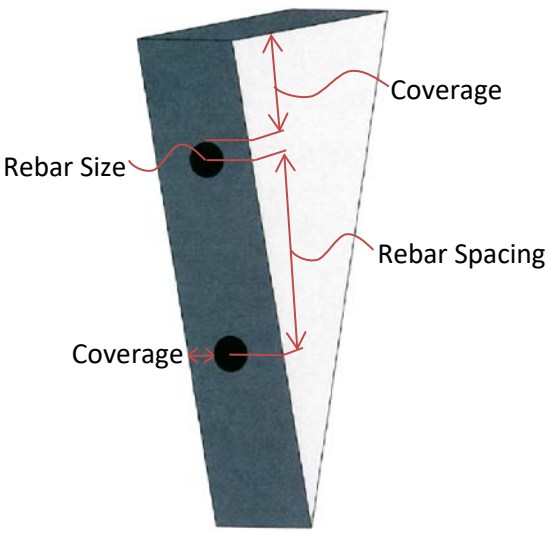

Example

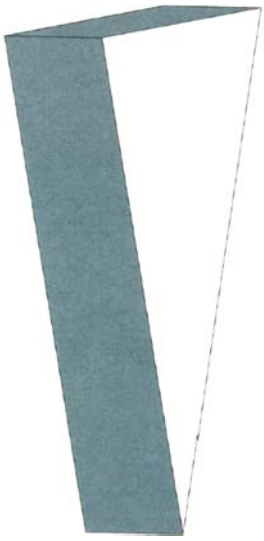

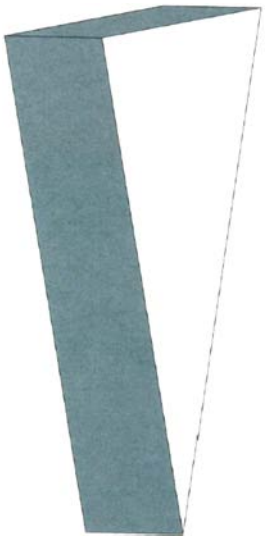

Does structure meet specifications? **YES** ☐ **NO** ☐

Producer Inspector(s):_____

TDOT Regional Inspector(s):_____

Comments:_____

F. Standard Precast Circular Concrete Data Sheet-Drainage Catch Basin

F.1 VERIFICATION OF DIMENSIONAL MEASUREMENT

Region:_____Date of Inspection:_____

Manufacturer Name:_____Manufacturer or Project Location:_____

Type of Structure:_____Contract No.:_____

Date Produced:_____Standard Drawing No.:_____

Verification of Measurements:

NOT TO SCALE

Inside Diameter

_____

Wall Thickness

_____

Inlet Diameter
Horizontal/Vertical

1._____

2._____

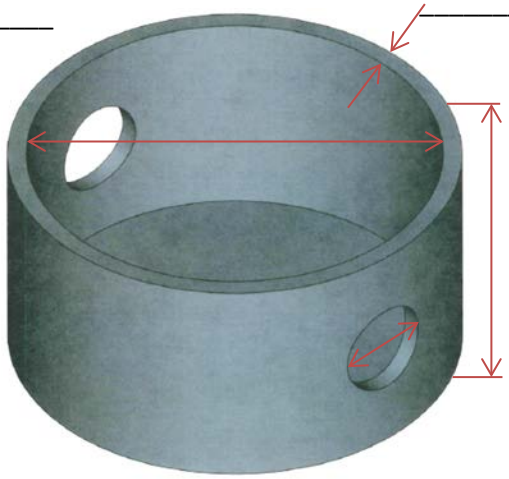

Height

_____

Outlet Diameter
Horizontal/Vertical

1._____

2._____

Inside Depth

_____

Diameter

1._____

2._____

Height

1._____

2._____

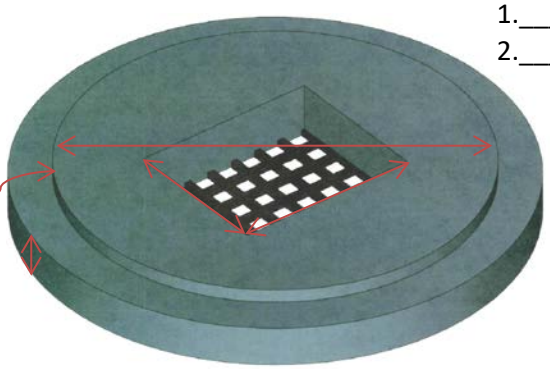

Opening

Length_____

Width_____

Note: All Measurements shall be reported to 1/16”

Note: If selected structure is different from above, sketch and verify reinforcement below

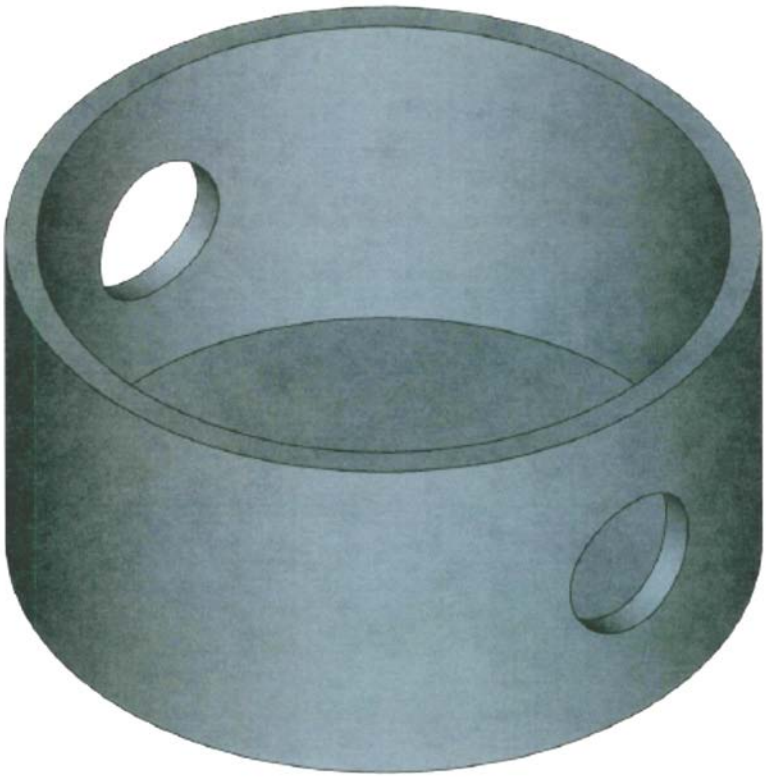

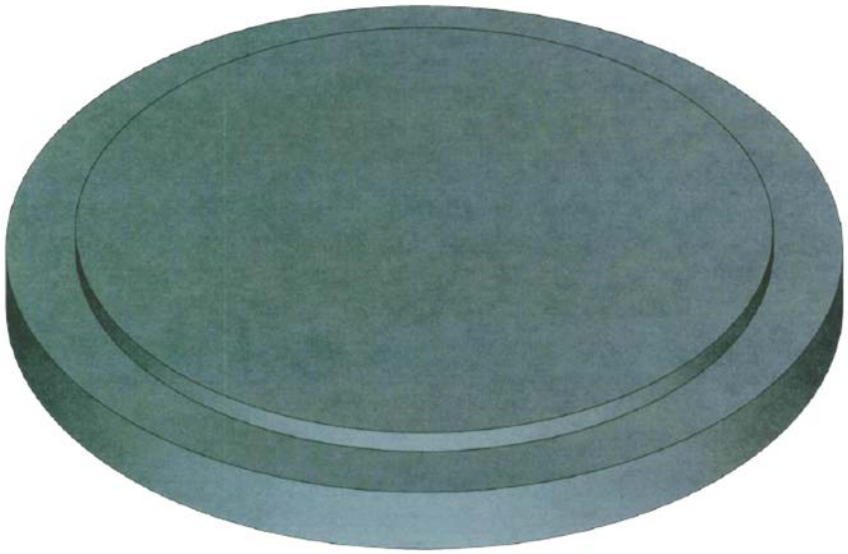

F.2 VERIFICATION OF CONCRETE STRENGTH (SCHMIDT HAMMER CALCULATION)

Base

Blow No.	Rebound	Blow No.	Rebound
1		6	
2		7	
3		8	
4		9	
5		10	

REBOUND AVERAGE:_____

Blow No.	Rebound	Blow No.	Rebound
1		6	
2		7	
3		8	
4		9	
5		10	

REBOUND AVERAGE: _____

COMPRESSIVE STRENGTH: _____

Note: Eliminate values higher or lower than 6 units of first average rebounds. Refer to Part 1 Section 3.0.

Lid

Blow No.	Rebound	Blow No.	Rebound
1		6	
2		7	
3		8	
4		9	
5		10	

REBOUND AVERAGE:_____

Blow No.	Rebound	Blow No.	Rebound
1		6	
2		7	
3		8	
4		9	
5		10	

REBOUND AVERAGE: _____

COMPRESSIVE STRENGTH: _____

Note: Eliminate values higher or lower than 6 units of first average rebounds. Refer to Part 1 Section 3.0.

Does structure meet specifications? **YES** ☐ **NO** ☐

Producer Inspector(s):_____

TDOT Regional Inspector(s):_____

Comments:_____

G. Standard Precast Circular Concrete Data Sheet-Drainage Manhole

G.1 VERIFICATION OF DIMENSIONAL MEASUREMENT

Region:_____Date of Inspection:_____

Manufacturer Name:_____Manufacturer or Project Location:_____

Type of Structure:_____Contract No.:_____

Date Produced:_____Standard Drawing No.:_____

Verification of Measurements:

NOT TO SCALE

Inside Diameter

_____

Wall Thickness

_____

Inlet Diameter
Horizontal/Vertical

1._____

2._____

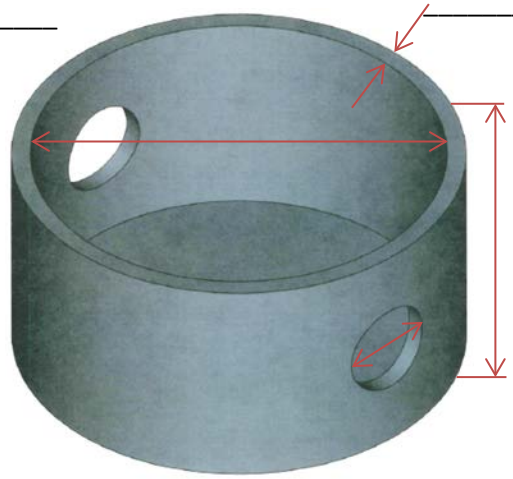

Height

_____

Inside Depth

_____

Outlet Diameter
Horizontal/Vertical

1._____

2._____

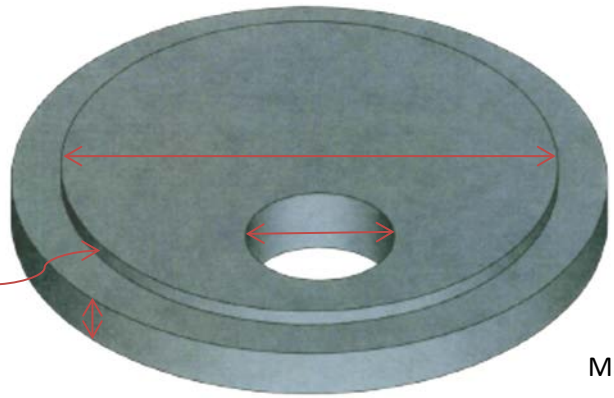

Diameter

1._____

2._____

Height

1._____

2._____

Manhole Diameter

_____

Note: All Measurements shall be reported to 1/16”

Note: If selected structure is different from above, sketch and verify reinforcement below

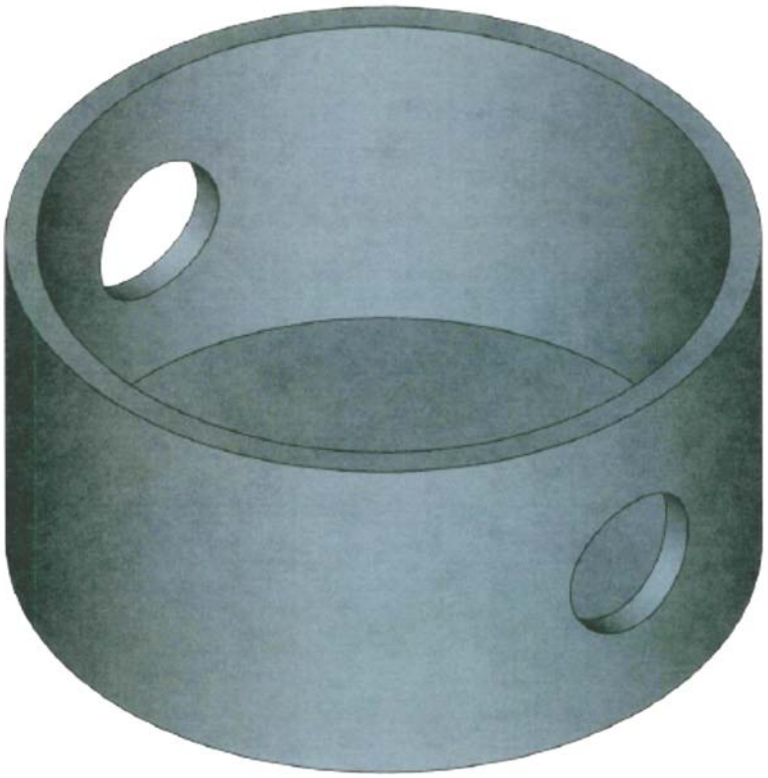

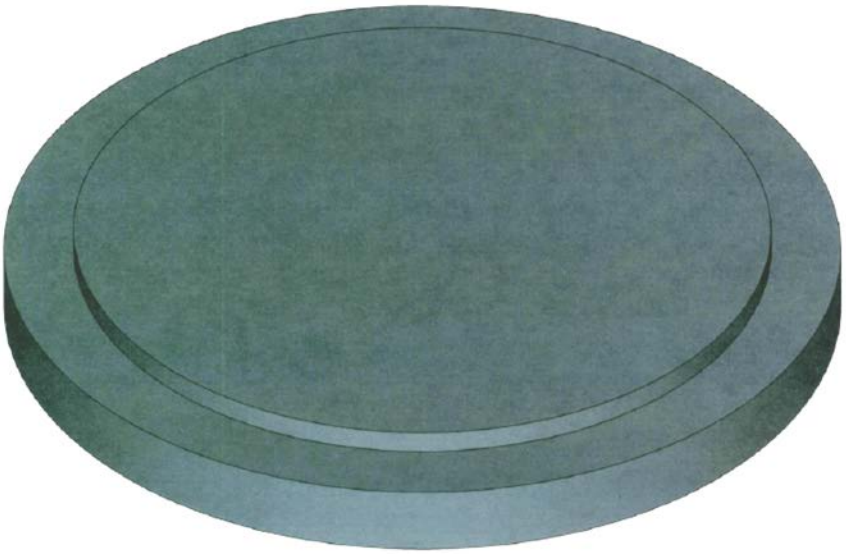

G.2 VERIFICATION OF CONCRETE STRENGTH (SCHMIDT HAMMER CALCULATION)

Base

Blow No.	Rebound	Blow No.	Rebound
1		6	
2		7	
3		8	
4		9	
5		10	

REBOUND AVERAGE:_____

Blow No.	Rebound	Blow No.	Rebound
1		6	
2		7	
3		8	
4		9	
5		10	

REBOUND AVERAGE: _____

COMPRESSIVE STRENGTH: _____

Note: Eliminate values higher or lower than 6 units of first average rebounds. Refer to Part 1 Section 3.0.

Lid

Blow No.	Rebound	Blow No.	Rebound
1		6	
2		7	
3		8	
4		9	
5		10	

REBOUND AVERAGE:_____

Blow No.	Rebound	Blow No.	Rebound
1		6	
2		7	
3		8	
4		9	
5		10	

REBOUND AVERAGE: _____

COMPRESSIVE STRENGTH: _____

Note: Eliminate values higher or lower than 6 units of first average rebounds. Refer to Part 1 Section 3.0.

Does structure meet specifications? **YES** ☐ **NO** ☐

Producer Inspector(s):_____

TDOT Regional Inspector(s):_____

Comments:_____

H. Standard Precast Circular Concrete Data Sheet-Drainage Junction Box

H.1 VERIFICATION OF DIMENSIONAL MEASUREMENT

Region:_____Date of Inspection:_____

Manufacturer Name:_____Manufacturer or Project Location:_____

Type of Structure:_____Contract No.:_____

Date Produced:_____Standard Drawing No.:_____

Verification of Measurements:

NOT TO SCALE

Inside Diameter

_____

Wall Thickness

_____

Inlet Diameter
Horizontal/Vertical

1._____

2._____

Inside Depth

_____

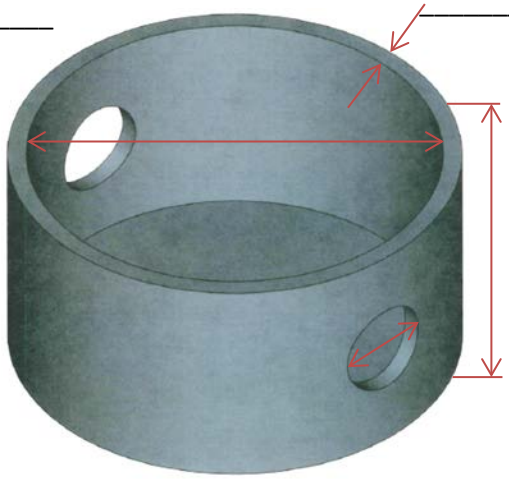

Height

_____

Outlet Diameter
Horizontal/Vertical

1._____

2._____

Height

1._____

2._____

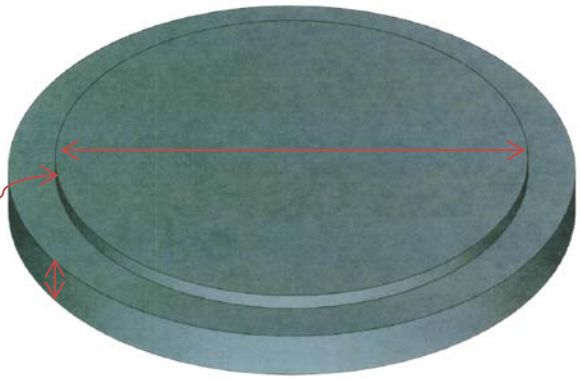

Diameter

1._____

2._____

Note: All Measurements shall be reported to 1/16”

Note: If selected structure is different from above, sketch and verify reinforcement below

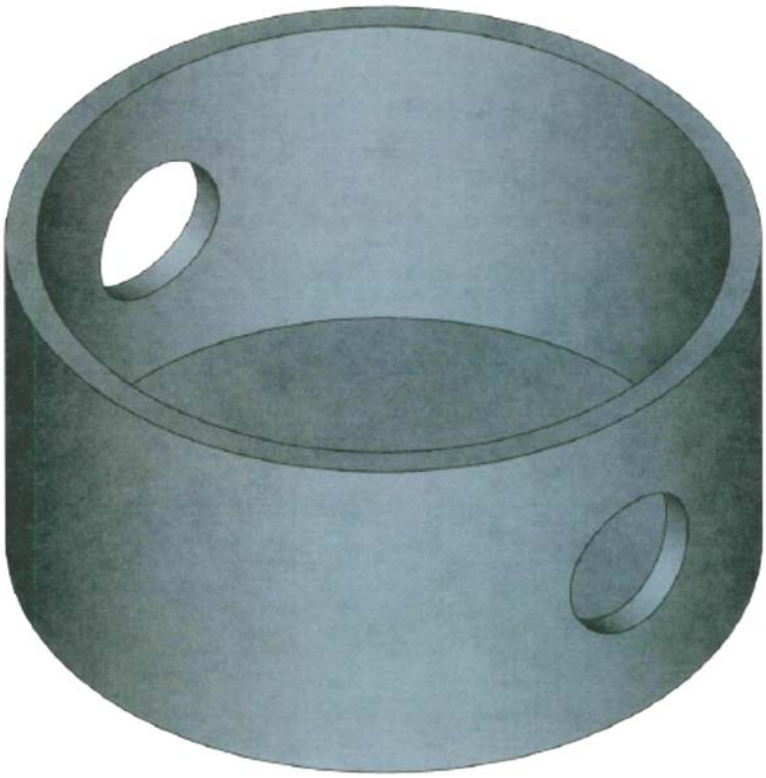

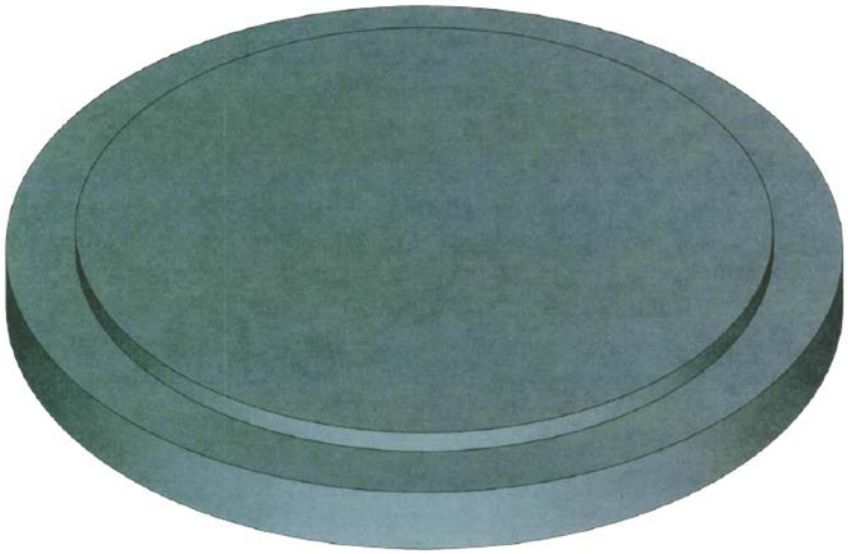

H.2 VERIFICATION OF CONCRETE STRENGTH (SCHMIDT HAMMER CALCULATION)

Base

Blow No.	Rebound	Blow No.	Rebound
1		6	
2		7	
3		8	
4		9	
5		10	

REBOUND AVERAGE:_____

Blow No.	Rebound	Blow No.	Rebound
1		6	
2		7	
3		8	
4		9	
5		10	

REBOUND AVERAGE: _____

COMPRESSIVE STRENGTH: _____

Note: Eliminate values higher or lower than 6 units of first average rebounds. Refer to Part 1 Section 3.0.

Lid

Blow No.	Rebound	Blow No.	Rebound
1		6	
2		7	
3		8	
4		9	
5		10	

REBOUND AVERAGE:_____

Blow No.	Rebound	Blow No.	Rebound
1		6	
2		7	
3		8	
4		9	
5		10	

REBOUND AVERAGE: _____

COMPRESSIVE STRENGTH: _____

Note: Eliminate values higher or lower than 6 units of first average rebounds. Refer to Part 1 Section 3.0.

Does structure meet specifications? **YES** ☐ **NO** ☐

Producer Inspector(s):_____

TDOT Regional Inspector(s):_____

Comments:_____

I. Standard Precast Circular Concrete Data Sheet-Drainage Spring Box

I.1 VERIFICATION OF DIMENSIONAL MEASUREMENT

Region:_____Date of Inspection:_____

Manufacturer Name:_____Manufacturer or Project Location:_____

Type of Structure:_____Contract No.:_____

Date Produced:_____Standard Drawing No.:_____

Verification of Measurements:

NOT TO SCALE

Inside Diameter

_____

Wall Thickness

_____

Inlet Diameter
Horizontal/Vertical

1._____

2._____

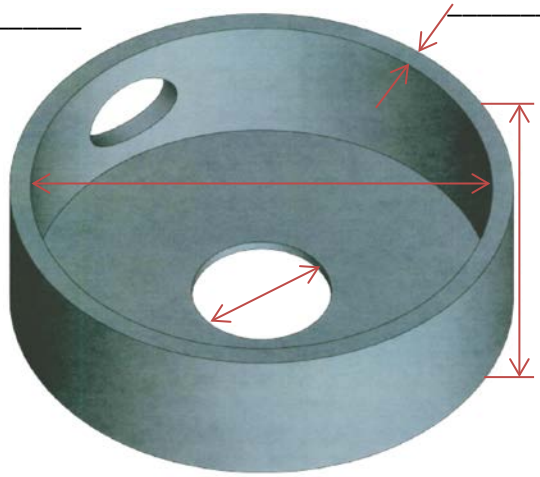

Height

_____

Inside Depth

_____

Outlet Diameter
Horizontal/Vertical

1._____

2._____

Height

1._____

2._____

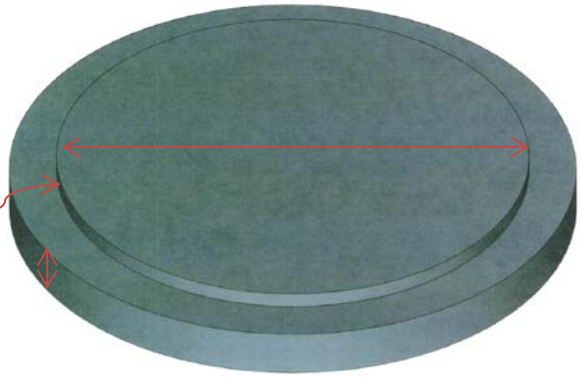

Diameter

1._____

2._____

Note: All Measurements shall be reported to 1/16”

Note: If selected structure is different from above, sketch and verify reinforcement below

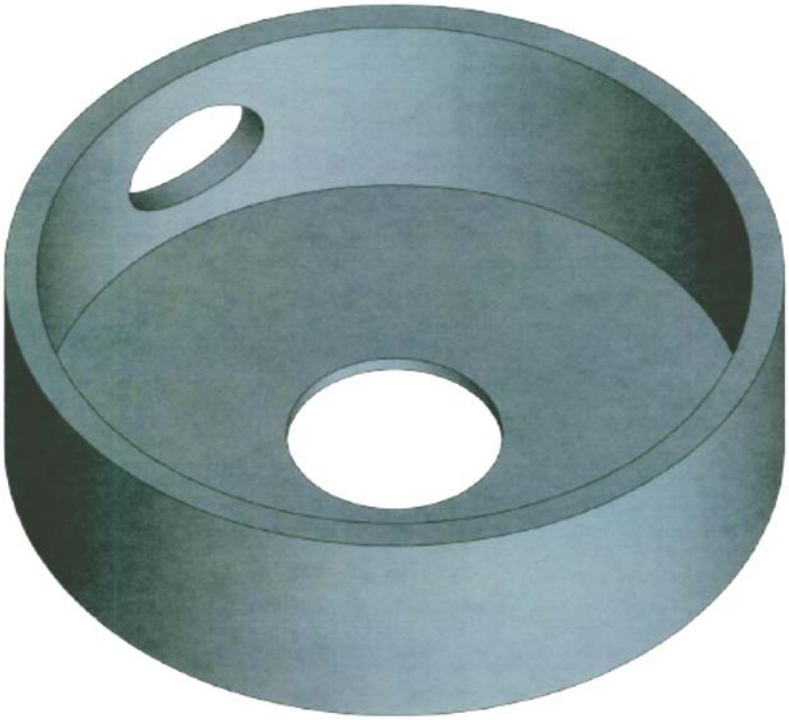

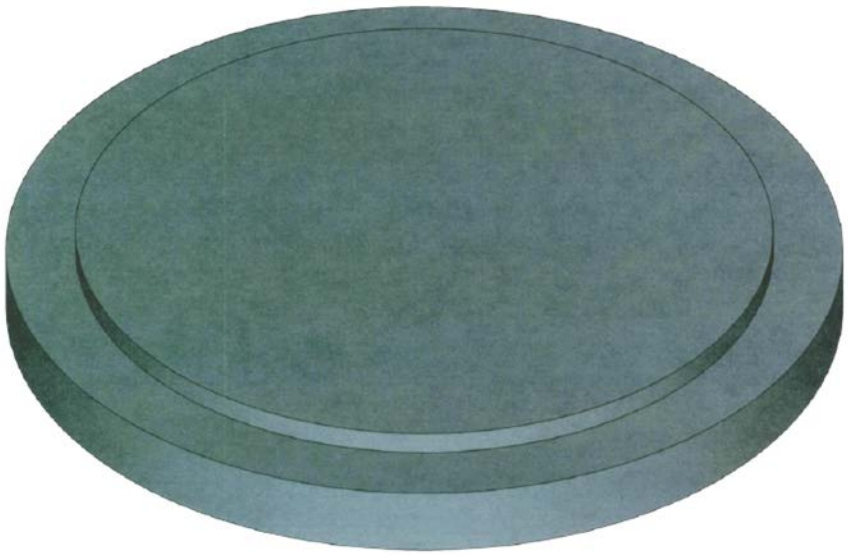

I.2 VERIFICATION OF CONCRETE STRENGTH (SCHMIDT HAMMER CALCULATION)

Base

Blow No.	Rebound	Blow No.	Rebound
1		6	
2		7	
3		8	
4		9	
5		10	

REBOUND AVERAGE:_____

Blow No.	Rebound	Blow No.	Rebound
1		6	
2		7	
3		8	
4		9	
5		10	

REBOUND AVERAGE: _____

COMPRESSIVE STRENGTH: _____

Note: Eliminate values higher or lower than 6 units of first average rebounds. Refer to Part 1 Section 3.0.

Lid

Blow No.	Rebound	Blow No.	Rebound
1		6	
2		7	
3		8	
4		9	
5		10	

REBOUND AVERAGE:_____

Blow No.	Rebound	Blow No.	Rebound
1		6	
2		7	
3		8	
4		9	
5		10	

REBOUND AVERAGE: _____

COMPRESSIVE STRENGTH: _____

Note: Eliminate values higher or lower than 6 units of first average rebounds. Refer to Part 1 Section 3.0.

Does structure meet specifications? **YES** ☐ **NO** ☐

Producer Inspector(s):_____

TDOT Regional Inspector(s):_____

Comments:_____