STATE OF TENNESSEE
DEPARTMENT OF TRANSPORTATION
PROGRAM DEVELOPMENT & ADMINISTRATION DIVISION
SUITE 600, JAMES K. POLK BUILDING
505 DEADERICK STREET
NASHVILLE, TENNESSEE 37243-1402
(615) 741-3301

JOHN C. SCHROER
COMMISSIONER

BILL HASLAM
GOVERNOR

TO: Will Reid, Assistant Chief Engineer of Operations

FROM: Ronnie Porter, Director, Program Development and Administration Division

SUBJECT: **Proprietary Item Request and Justification for City of Trenton for Lighting, Benches, Trash Recptacles and Tree Grate**

I, Ronnie Porter, Director of the Program Development and Administration Division, request approval for the City of Trenton to be certified to utilize the following proprietary item(s) over the next three years, where Federal funding is used:

Landscape Forms Plainwell Bench (Without Center Arm 25"Dx32"Hx72"L)
Landscape Forms Plainwell Bench Trash Receptacle 35 Gallon
Holophane Light Standards Pedestrian Valencia Series Arm 27" Long for Mounting a Single Fixture, Finished Holophane Black
East Jordan Iron Works Cast Iron Tree Grate Gray Iron (CL35B) Non Traffic 432 sq inches Powder Coat Flat Black

Justification

Per Code of Federal Regulations 23 CFR 365.411. The light poles, benches, trash receptacles and tree grate are essential for synchronization with existing facilities installed in the previously completed phases 1 and 2. These products are necessary to match the visual appearance of the existing lightpoles, trash receptacles, tree grates and benches.

If you have any questions or comments, please contact **Sarah Sutton at (615)532-3824** with the Local Programs Development Office or at Sarah.Sutton@tn.gov.

I, Ronnie Porter, Program Development and Administration Division Director, of the Tennessee Department of Transportation, do hereby certify that in accordance with the requirements of 23 CFR 635.411(a) (2) that the patented or proprietary item(s) as listed above is essential for the synchronization with existing facilities or no equally suitable alternative exists for this patented or proprietary item as listed above.

Director, Traffic Operations
Recommendation for Approval

Assistant Chief Engineer of Operations

4/16/13
Date

CITY OF TRENTON

309 S. College Street, Trenton, TN 38382

731-855-2013 Fax 731-855-1091

Ricky Jackson, Mayor

CITY RECORDER
Leigh Ann Reynolds

CITY JUDGE
Jeff Mueller

CITY ATTORNEY
Richard B. Gossum

ALDERMEN
Michael Abbott
Frank Gibson
Rickey Graves
Joe H. Hammonds
Dona Leadbetter
Billie Wade

April 6, 2018

Ms. Whitney Britt
Transportation Manager
TDOT Enhancement Section
Suite 600, James K. Polk Bldg.
505 Deaderick Street
Nashville, TN 37243

Re: Proprietary Item Request and Justification
Trenton Downtown Enhancements Phase III
TDOT Pin No. 121507.00, TLM Project No. J-5633

Dear Ms. Britt:

The City of Trenton is requesting a certification to specify the Landscape Forms Plainwell Bench (Without Center Arm 25" D x 32" H x 72" L), Light Standards Pedestrian Holophane, Landscape Forms Plainwell 35 Gallon Trash Receptacle and an East Jordan Iron Works Cast Iron Tree Grate to be used as part of the design component for the Downtown Enhancement Project Phase III.

The City has completed two previous phases of downtown enhancements (Pin No. 112016.00 & 118522.00) projects that included the installation of the Landscape Forms Plainwell Bench, Holophane Pedestrian Lights, Landscape Forms Trash Receptacles and East Jordan Iron Work Tree Grates. These products are necessary to provide synchronization with the existing benches, trash receptacles, lights and tree grates.

If you have any questions or require additional information, please do not hesitate to contact me at (731) 855-2013.

Sincerely,

Ricky Jackson, Mayor
City of Trenton

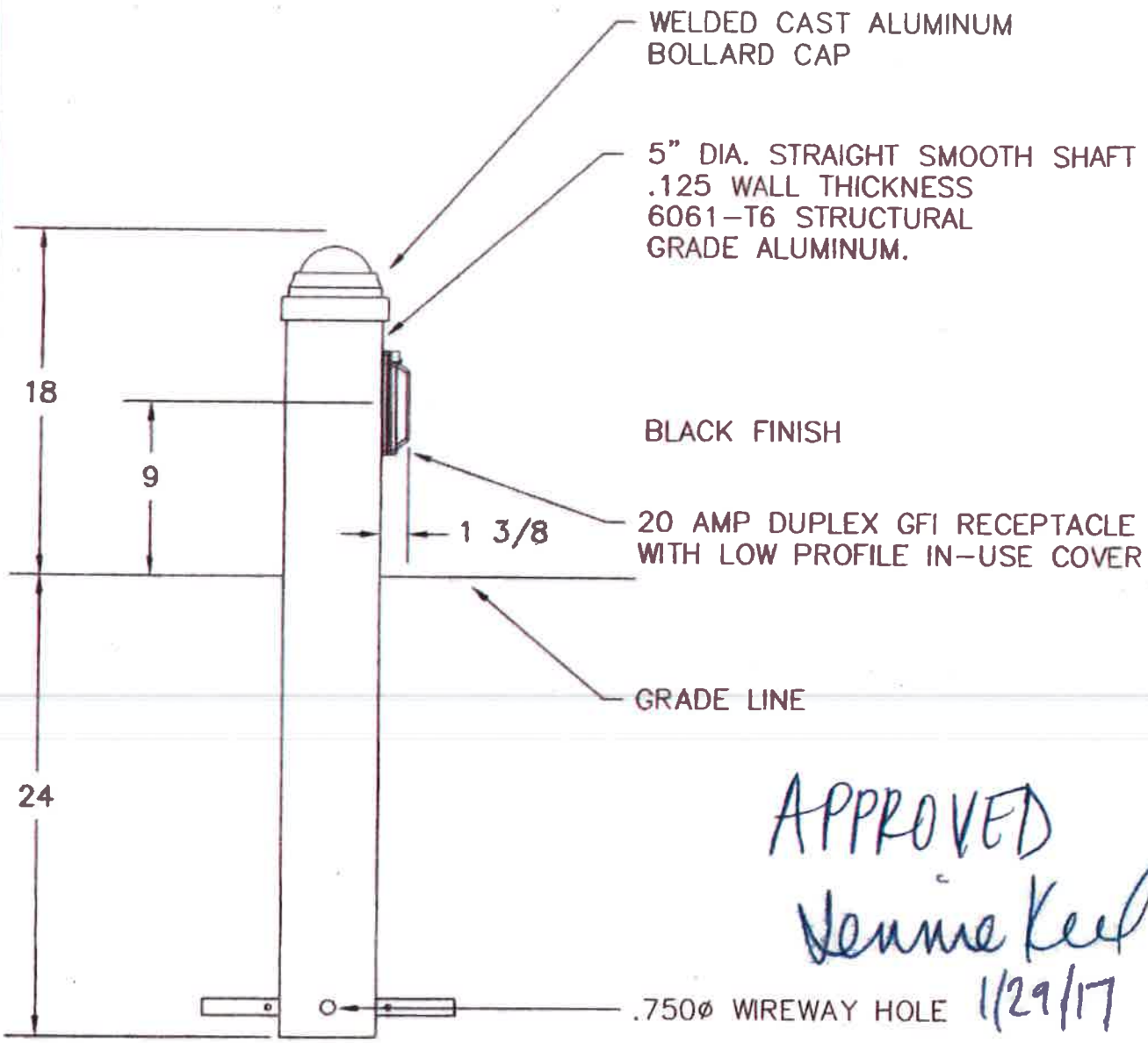

APPROVED
Jennie Keel
1/29/17

STERNBERG SINCE 1923	TRENTON, TN	1/8" = 1"	DRAWN SS DRAWN DATE 5/31/13
	4555B-S-18-DB/20AGFI(LP)IUC/BK		DRAWING NUMBER SC13450B

Plainwell™

Product Drawing

Litter Receptacle, Side Opening, Wood Side Panel, 35 Gallon

Date: 5/6/2010

www.landscapeforms.com Ph: 800.521.2546

Project: Trenton Downtown Improvements Phase 2 - Trenton, TN

Order: 0000220374 Line:2

Qty: 3

Plainwell Litter

Style: Side Opening, 35 gal. capacity

Material: Wood

Options: None

Side Panel Selection: Ipe no finish (exterior use only)

Frame Powdercoat Color: Titanium

Accepted by

☒ APPROVED

☐ APPROVED AS NOTED

☐ REVISE AND RESUBMIT

JRS — By

1-30-17 — Date

Review does not relieve Contractor from responsibility for errors or deviations from contract requirements.

RITCHIE SMITH ASSOCIATES

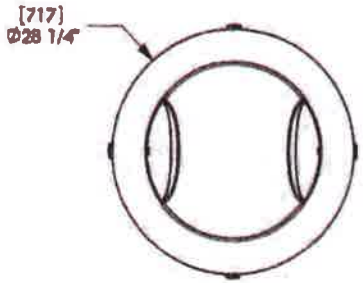

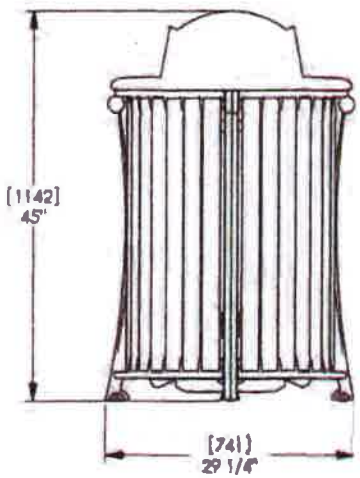

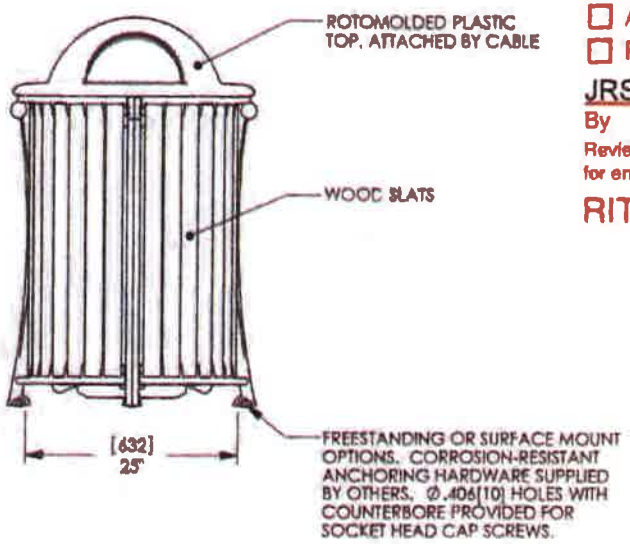

landscapeforms

Drawing: PL277-03
Dimensions are in inches [mm]
U.S. Patent No.: D422,390

CONFIDENTIAL DRAWING INFORMATION CONTAINED HEREIN IS THE PROPERTY OF LANDSCAPE FORMS, INC. INTENDED USE IS LIMITED TO DESIGN PROFESSIONALS SPECIFYING LANDSCAPE FORMS, INC. PRODUCTS AND THEIR DIRECT CLIENTS. DRAWING IS NOT TO BE COPIED OR DISCLOSED TO OTHERS WITHOUT THE CONSENT OF LANDSCAPE FORMS, INC.
© 2013 LANDSCAPE FORMS, INC. ALL RIGHTS RESERVED.

Plainwell™

Product Drawing

Bench, 72" Length, with Wood Seat, Freestanding / Surface Mount

www.landscapeforms.com

Date: 4/9/2010
Ph: 800.521.2546

Project: Trenton Downtown Improvements Phase 2 - Trenton, TN
Order: 0000220374 Line:1
Qty: 1

Plainwell Bench
Length: 72"
Insert Style: Wood
Wood Selection: Ipe no finish (exterior use only)
Arm Option: None
Powdercoat Color: Titanium

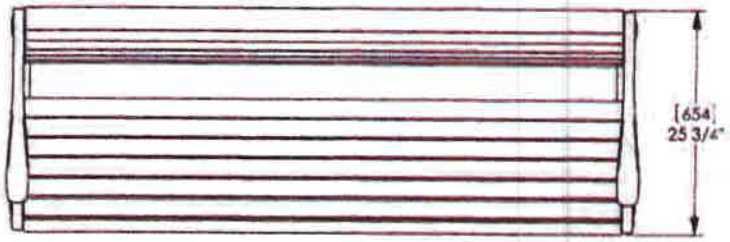

NOTE:
FREESTANDING OR SURFACE MOUNT OPTIONS. CORROSION-RESISTANT ANCHORING HARDWARE SUPPLIED BY OTHERS. Ø13/32" HOLES WITH COUNTERBORE PROVIDED FOR SOCKET HEAD CAP SCREWS.

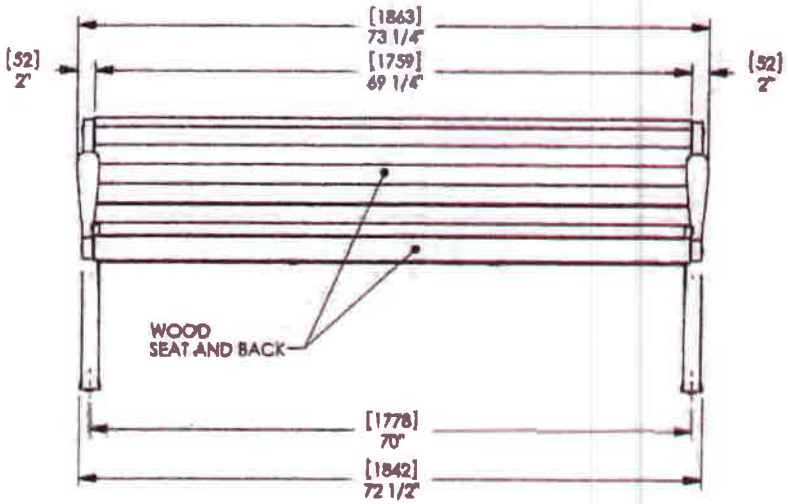

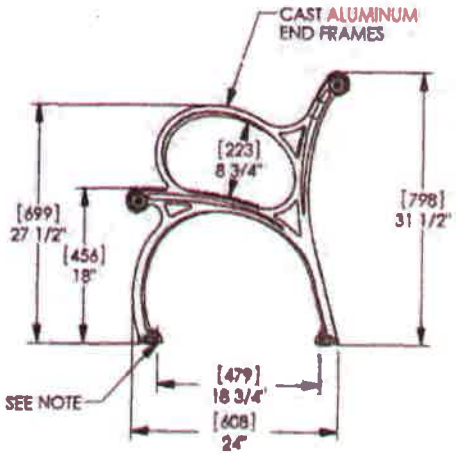

Accepted by

☒ APPROVED
☐ APPROVED AS NOTED
☐ REVISE AND RESUBMIT

JRS — By
1-30-17 — Date

Review does not relieve Contractor from responsibility for errors or deviations from contract requirements.

RITCHIE SMITH ASSOCIATES

landscapeforms

Drawing: PL271-03
Dimensions are in Inches [mm]
U.S. Patent No.: D419,341

CONFIDENTIAL DRAWING INFORMATION CONTAINED HEREIN IS THE PROPERTY OF LANDSCAPE FORMS, INC. INTENDED USE IS LIMITED TO DESIGN PROFESSIONALS SPECIFYING LANDSCAPE FORMS, INC. PRODUCTS AND THEIR DIRECT CLIENTS. DRAWING IS NOT TO BE COPIED OR DISCLOSED TO OTHERS WITHOUT THE CONSENT OF LANDSCAPE FORMS, INC.
© 2013 LANDSCAPE FORMS, INC. ALL RIGHTS RESERVED.

Plainwell™

Product Drawing

Litter Receptacle, Side Opening, Wood Side Panel, 35 Gallon

Date: 5/8/2010

www.landscapeforms.com Ph: 800.521.2546

Project: Trenton Downtown Improvements Phase 2 - Trenton, TN

Order: 0000220374 Line:2

Qty: 3

Plainwell Litter

Style: Side Opening, 35 gal. capacity

Material: Wood

Options: None

Side Panel Selection: Ipe no finish (exterior use only)

Frame Powdercoat Color: Titanium

Accepted by

☒ APPROVED

☐ APPROVED AS NOTED

☐ REVISE AND RESUBMIT

JRS — By

1-30-17 — Date

Review does not relieve Contractor from responsibility for errors or deviations from contract requirements.

RITCHIE SMITH ASSOCIATES

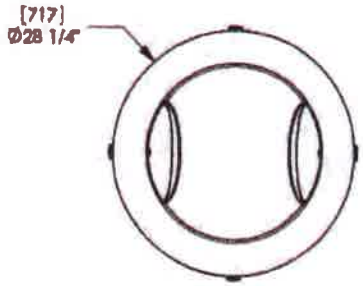

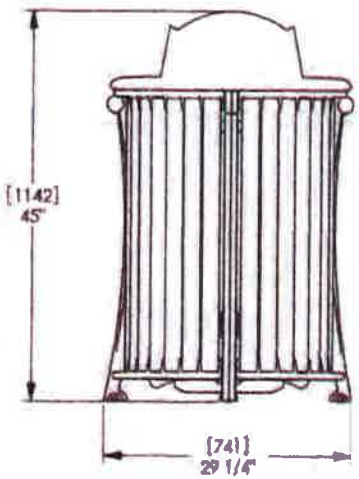

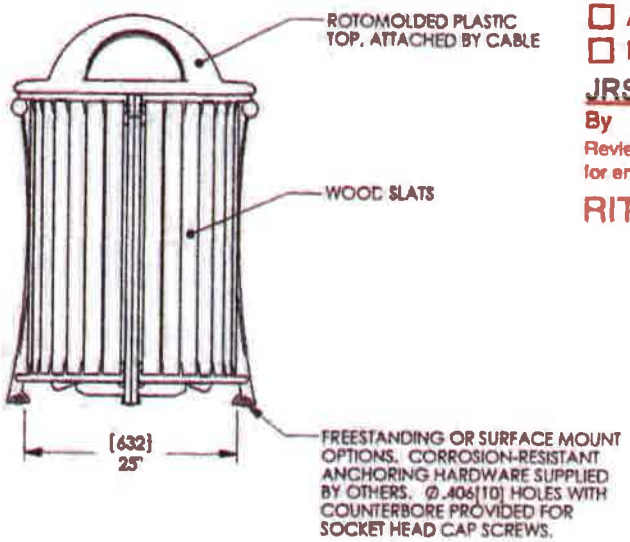

landscapeforms

Drawing: PL277-03
Dimensions are in inches [mm]
U.S. Patent No.: D422,390

CONFIDENTIAL DRAWING INFORMATION CONTAINED HEREIN IS THE PROPERTY OF LANDSCAPE FORMS, INC. INTENDED USE IS LIMITED TO DESIGN PROFESSIONALS SPECIFYING LANDSCAPE FORMS, INC. PRODUCTS AND THEIR DIRECT CLIENTS. DRAWING IS NOT TO BE COPIED OR DISCLOSED TO OTHERS WITHOUT THE CONSENT OF LANDSCAPE FORMS, INC.
© 2013 LANDSCAPE FORMS, INC. ALL RIGHTS RESERVED.

landscapeforms

PLAINWELL

Materials / Colors

Powdercoated Metal

In addition to colors shown below, a wide selection of optional and custom colors may be specified for an upcharge

black · blue bell · buttercup · cranberry · grass · ivy · matte black · ocean · stormcloud · white

Metallic

bronze · olive · silver · steel · stone · titanium · mercury

2013 Color Series*

bumblebee yellow · cosmic blue · flamboyant orange · parrot green · peaptoe pink

Wood

Exterior woods weather to a warm, pewter gray; no finish is applied so no maintenance is required. Options: ipe, oak and maple may be specified as FSC® Certified (may extend lead times). Special stain may be specified for interior woods. Pricing for standard woods and options varies, see Price Book.
(P) = Premium Woods

exterior no finish

ipe · jarrah (P)

interior LF-80 finish

oak · maple · jarrah (P)

☒ APPROVED
☐ APPROVED AS NOTED
☐ REVISE AND RESUBMIT

JRS — By
1-30-17 — Date

Review does not relieve Contractor from responsibility for errors or deviations from contract requirements.

RITCHIE SMITH ASSOCIATES

IMPORTANT NOTE: Standard choices are shown, colors are approximate. To make final color selections, please call for material samples.
*Colors available for an upcharge.

ASBC SEARCY BUILDER-CONTRACTOR, INC. (731) 885-7833 UNION CITY, TN

Project: **Trenton Downtown Revitalization**
Location: **Trenton, TN**

Submittal Cover Form

Submittal Title: **Tree Grates**

Submittal Item No. / Page / Paragraph: **0200-03 Site**

Manufacturer's Name:

Contractor / Subcontractor/**Material Supplier**: **EJ/ Rankin Fabrication**

Submittal Type:

Product Data / **Shop Drawing** / Sample / Information Submittal

Allen Searcy Builder - Contractor, Inc.
Union City, Tennessee

(X) Approved Pending Architect Approval

( ) Resubmitted

( ) Reviewed

By: _____ **Date: February 21, 2013**

Date Submitted: February 21, 2013

Space Below for Architect / Engineer's Use Only

8691 Tree Grate

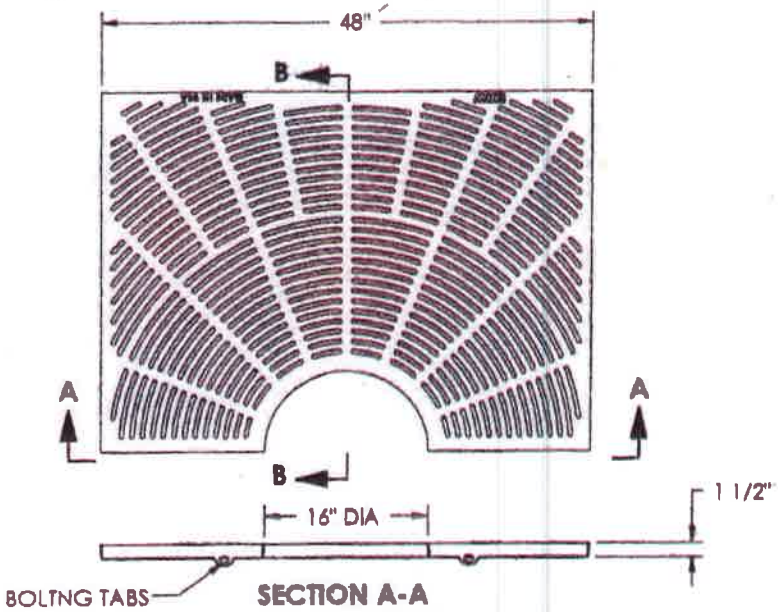

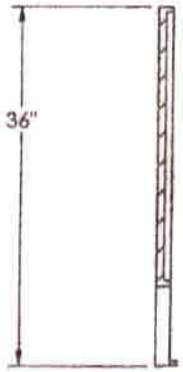

SECTION B-B

BOTTOM VIEW

Product Number
00869136

Design Features
-Materials
Gray Iron (CL35B)
-Design Load
Non-Traffic
-Open Area
432 Sq. Inches
-Coating ✓
Dipped
-✓ Designates Machined Surface

Certification
-ASTM A48
-
-
-Country of Origin: USA

Drawing Revision
2/12/2013 Designer: DJH
Revised By:

Disclaimer
Weights (lbs/kg), dimensions (inches/mm) and drawings provided for your guidance. We reserve the right to modify specifications without prior notice.

CONFIDENTIAL: This drawing is the property of EJ Group, Inc. and embodies confidential information, registered marks, patents, trade secret information and/or know how that is the property of EJ Group, Inc. Copyright © 2012 EJ Group, Inc. All rights reserved.

Contact
800 626 4653
ejco.com

8691 FRAME

NOTE: TREE GRATE FRAMES ARE SHIPPED IN HALVES FROM VENDOR AND MUST HAVE HARDWARE ATTACHED

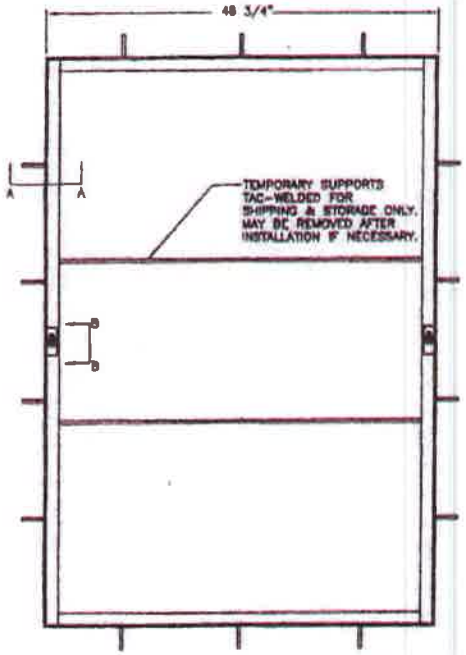

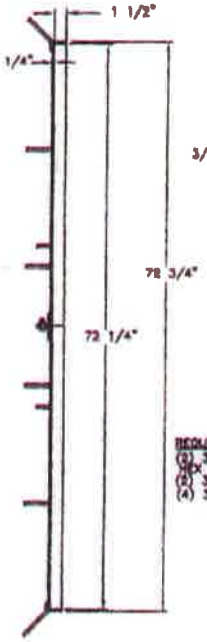

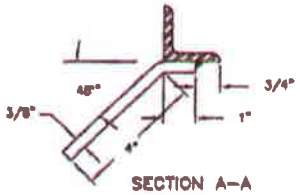

SECTION A–A

REQUIRED HARDWARE:
(2) 3/8" – 16 X 1 1/4" LONG STAINLESS STEEL HEX HEAD BOLT
(2) 3/8" – 16 STAINLESS STEEL HEX NUT
(4) 3/8" ID X 7/8" OD STAINLESS STEEL WASHER

SECTION B–B

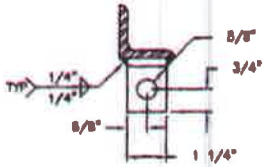

BOLT TAB DETAIL

USE 1 3/4"X1 3/4"X1/4" FOR BOLT TABS

NOTES:

1. ALL COMPONANTS SHALL CONFORM TO ASTM A36.
2. FRAME WILL SUPPORT SAME LOADING CONDITIONS AS SURROUNDING CONCRETE WHEN PROPERLY CAST IN.
3. ENTIRE FRAME SHALL HAVE A FLAT BLACK RUSTOLEUM COATING.
4. PARTS TO HAVE PRODUCT NUMBER IDENTIFICATION.
5. UNLESS OTHERWISE SPECIFIED AND/OR INDICATED, FABRICATION TOLERENCES SHALL BE +/–1/16".

PRODUCT NUMBER

00869110

DESIGN FEATURES

MATERIALS
FRAME-STEEL
ASTM A36

DESIGN LOAD
HEAVY DUTY

COATING
PAINTED

OPEN AREA
N/A

√ DESIGNATES MACHINED SURFACE

Corporate Headquarters
301 Spring Street
PO Box 439
East Jordan, MI
49727-0439
800.874.4100

EJ GROUP

Call Today for More Information
800.626.4653
EJIW EAST JORDAN IRON WORKS
WE COVER YOUR INFRASTRUCTURE
www.ejiw.com
MADE IN THE USA

•Weights (lbs./kg.) dimensions (inches/mm.), and drawings provided for your guidance.
•We reserve the right to modify specifications without prior notice.
•Uncontrolled distribution.

CONFIDENTIAL: This drawing is the property of East Jordan Iron Works, Inc., and embodies confidential information, registered marks, trade secret information, and/or know-how that is the property of East Jordan Iron Works, Inc. ©Copyright 2009 East Jordan Iron Works, Inc.

DRAWING DETAILS

ORIGINAL DRAWING: JIJ 09/13/06
REVISED BY: SMM 11/05/10

V8955 Tree Grate

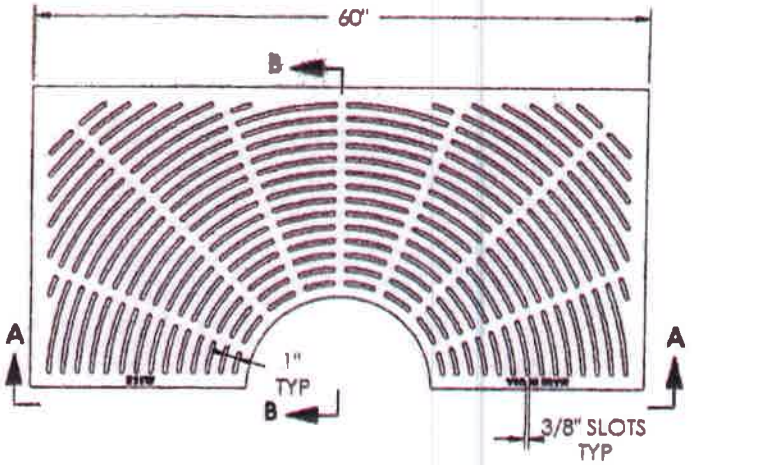

SECTION A-A

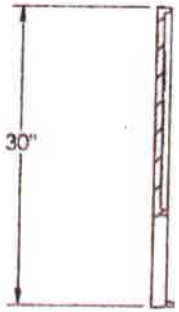

SECTION B-B

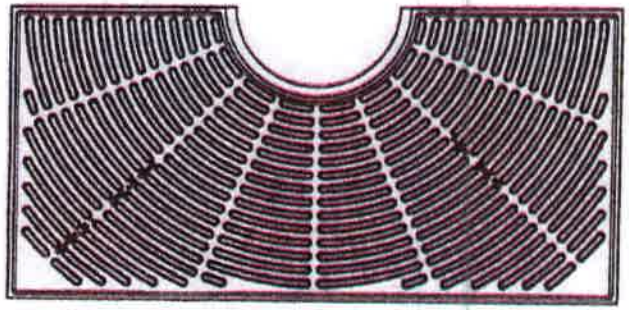

BOTTOM VIEW

Product Number

48955034

Design Features

-Materials
Gray Iron (CL35B)
-Design Load
Non-Traffic
-Open Area
332 Sq. Inches
-Coating
Dipped
-✓ Designates Machined Surface

Certification

-ASTM A48
-
-
-Country of Origin: USA

Drawing Revision

2/12/2013 Designer: DJH
Revised By:

Disclaimer

Weights (lbs/kg), dimensions (inches/mm) and drawings provided for your guidance. We reserve the right to modify specifications without prior notice.

CONFIDENTIAL. This drawing is the property of EJ Group, Inc. and embodies confidential information, registered marks, patents, trade secret information, and/or know how that is the property of EJ Group, Inc. Copyright © 2012 EJ Group, Inc. All rights reserved

Contact

800 826 4653
ejco.com

8682 (2) PIECE FRAME

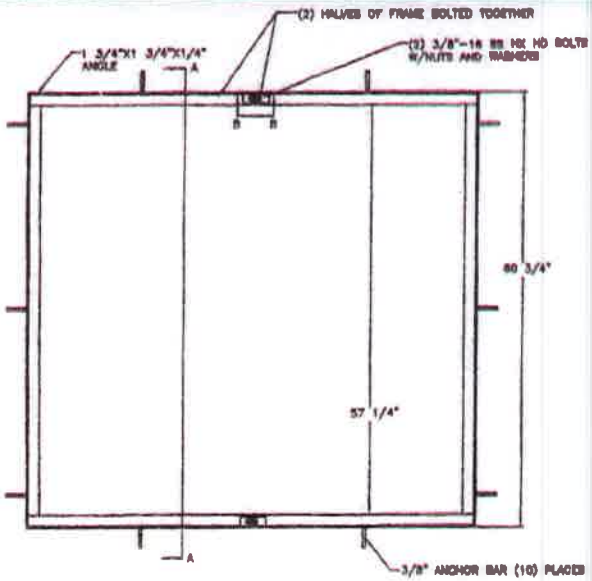

SECTION

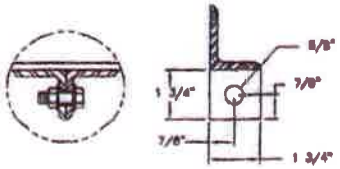

BOLT TAB DETAIL
USE 1 3/4"X1 3/4"X1/4" FOR BOLT TABS

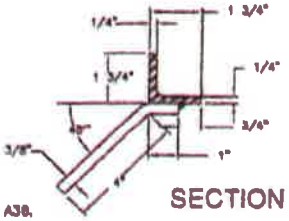

SECTION DETAIL

NOTES:

1. ALL COMPONANTS SHALL CONFORM TO ASTM A36.
2. FRAME WILL SUPPORT SAME LOADING CONDITIONS AS SURROUNDING CONCRETE WHEN PROPERLY CAST IN.
3. ENTIRE FRAME SHALL HAVE A FLAT BLACK RUSTOLEUM COATING.
4. PARTS TO HAVE PRODUCT NUMBER IDENTIFICATION.
5. UNLESS OTHERWISE SPECIFIED AND/OR INDICATED, FABRICATION TOLERENCES SHALL BE +/-1/16".

PRODUCT NUMBER

00868210

DESIGN FEATURES

MATERIALS

FRAME-STEEL
ASTM A36

DESIGN LOAD
NON-TRAFFIC

COATING
PAINTED

OPEN AREA
N/A

√ DESIGNATES MACHINE SURFACE

Corporate
Headquarters
301 Spring Street
PO Box 439
East Jordan, MI
49727-0439
800.874.4100

EJ GROUP

Call Today for More Information
800.626.4653
EJIW EAST JORDAN IRON WORKS, INC.
WE COVER YOUR INFRASTRUCTURE
www.ejiw.com
MADE IN THE USA

• Weights (lbs./kg.) dimensions (inches/mm.) and drawings provided for your guidance.
• We reserve the right to modify specifications without prior notice
• Uncontrolled distribution

CONFIDENTIAL: This drawing is the property of East Jordan Iron Works, Inc., and embodies confidential information, registered marks, trade secret information, and/or know how that is the property of East Jordan Iron Works, Inc. ©Copyright 2009 East Jordan Iron Works, Inc.

DRAWING DETAILS

ORIGINAL DRAWING:	JIJ	05/07/03
REVISED BY:	DEW	07/20/11