TN Department of General Services | Real Estate Asset Management (STREAM)

LEASING PROPOSAL REQUEST

Agency, Office Name	Department of Correction (DOC)
Principal Use Office/Warehouse/Other	Office
Employee Headcount at Premises	39
Transaction Number	TR #22-11-906

	Desired	Alternates Accepted
Service Area and Boundary Requirements	DOC Probation and Parole desires to locate in office space within Davidson County, TN, with a preference to Central Nashville (See Schedule 1 below for the preferred boundary map). ▪ Preference is for a location that is centrally located near government agencies, courts and law enforcement locations. ▪ Strong preference for close proximity to public transportation route lines, if available in the area. Please include a map with submitted proposal showing the route and schedule. If public transportation is not available, including shuttle service with submitted proposal will be considered. ▪ As this office provides sevices to the public, the preferred location is obvious from a public road, includes ease of access and identifiable exterior signage (see Schedule 5 and/or sign package published at www.tnlpr.gov).	**YES**
Usable & Rentable Contiguous Square Footage	DOC : 8,900 – 9,800 USF* 9,800 – 10,700 RSF *Usable square footage does not include restrooms, mechanical rooms, janitorial closets, telecom closets or vestibules. ADDITIONAL DAVIDSON Co. DOC SPACE NEEDS: • North: 9,400 – 10,300 RSF, 8,500 – 9,400 USF* (22-11-909) • South: 8,400 – 9,200 RSF, 7,600 – 8,400 USF* (22-11-907) • East: 8,500 – 9,300 RSF, 7,700 – 8,500 USF* (22-11-910) • West 6,000 – 6,600 RSF, 5,400 – 6,000 USF* (22-11-908) Proposers are encouraged to submit proposals for any of the above space needs, or any combination of the above space	**YES**

	needs. For example, a proposal may be for a single-story build-to-suit (or renovate-to-suit) building for 2 or more of the above needs. If submitting a single proposal for 2 or more of the above, please anticipate the square footage size to be within the sum total of the rentable square footage range and parking space requirement. Proposers may submit multiple proposals as well. Please contact Don Sebastian at 615-347-6417 or donald.sebastian@tn.gov. Proposals submitted with a squarefootage with a 10% deviation (up/down) will be considered an "Alternate" and may be rejected. The State intends "contiguous" to mean space that is adjacent including floors below or above. The actual square footage will be determined by programming and space planning. Preference for single-story and single-tenant building.	
Parking Requirements	Parking Spaces Required Free, paved, well lit, striped parking. Preference may be given to locations that can provide additional parking spaces; however, fewer spaces will be considered. The parking provided shall include handicap parking to meet the relevant code requirements and special considerations below: DOC: Staff Parking = Spaces required 39 DOC: Client Parking= Spaces required 20 Total spaces required 59 Additional Davidson Co. Parking Requirements: • North: Staff = 20 Client = 36 Total = 56 (22-11-909) • South: Staff = 30 Client = 20 Total = 50 (22-11-907) • East: Staff = 32 Client = 20 Total = 52 (22-11-910) • West Staff = 19 Client = 15 Total = 34 (22-11-908) Secured Staff and fleet parking MUST be fully enclosed with 8' chain link fence and gated including direct access to the building, requires 24-hour access, and provides infrastructure for security which is accessible from a vehicle without having to exit the vehicle (key fob, key pad, etc.). Fencing and security for staff parking lot is an agency expense and is not to be included in the proposed lease rate; the cost is to be provided separately.	**YES**

Special Buildout and Other Specifications	Building must include 24 hour access, appropriate HVAC, and other applicable building mechanics as appropriate for business operation. When available, the preferred location provides municipal water and sewer systems. Proposed space should include separate entrances for clients and staff. **Schedule 1:** Preferred Boundary Map **Schedule 2:** DOC Space Needs Analysis (see other Lease Proposal Requests at www.tnlpr.gov for each individual requirement) **Schedule 3:** DOC Special Build Out Specifications **Schedule 4:** Transaction Window **Schedule 5:** DOC Concept Plan (not for construction; to show security zones) **Schedule 6:** Standard Signage Package (Not all types may be applicable) **Schedule 7:** Lease Exhibit D Standard	**YES**
Term Length	Ten (10) Years and 1 five-year renewal option.	**YES**
Commencement Date	Estimated to be within 18 to 24 months of the date of lease execution, depending on scope of work of the awarded location, pursuant to Pro Forma Lease, Sections 19 and 20. **Provide estimated date with proposal.**	**YES**
Termination Options	Termination for Convenience: 90 day per Block 6 of the Lease Termination for Cause: see Lease – Exhibit A, Paragraph 5.	**YES, for convenience only**
Terms and Conditions	As set forth in Pro Forma Lease. A copy of the Pro Forma Lease form can be found by visiting: www.tnlpr.gov **Comments to the Lease Template are required with submission of the Lease Proposal Quotation Form.**	**NO**
Utility, Services and Other Costs	Proposals can be quoted as either FULL SERVICE with no pass throughs or MODIFIED GROSS basis with Tenant responsible for payment of utilities and janitorial only.	**NO**

Communications:

Interested parties must direct all communications regarding this procurement to Ellen Mims, Leasing Coordinator, who is the State's official point of contact. Email is the preferred form of communication.

Name: Ellen Mims
Phone Number: 615-961-0067
Email: rfp.coordinator@tn.gov

Submittal Deadline and Format:

The completed "Lease Proposal Form" must be submitted as follows no later than **2:00 pm Central Standard Time (CST) on Friday August 18, 2023.**

Submittals must be received via either:
Email: *RFP.Coordinator@tn.gov*
(It is recommended that any email submission be sent "returned receipt requested" and confirm email is received)

Or

Printed copy to:
Department of General Services/STREAM
Attn: Stephen J. Lusk, Esq., Executive Director of Compliance
William R. Snodgrass Tennessee Tower 24th Floor
312 Rosa L. Parks Avenue, Nashville, TN 37243

Method of Evaluation:
Please refer to the State of Tennessee Real Estate Asset Management Division website for the complete document, which describes the proposal evaluation method, by using the following link:
https://www.tn.gov/content/dam/tn/generalservices/documents/stream/leasing/Section_IV-STREAM_LeaseProposalPackage-Evaluation_Method.pdf

Disclaimer of Subjectivity:

Proposers should understand and accept that by responding to this solicitation they are willingly participating in a process that may consist of some degree of subjectivity. Proposers should be aware that the proposal determined to best meet the needs of the State may not necessarily be the lowest cost proposal.

Schedule 1: Preferred Boundary Map

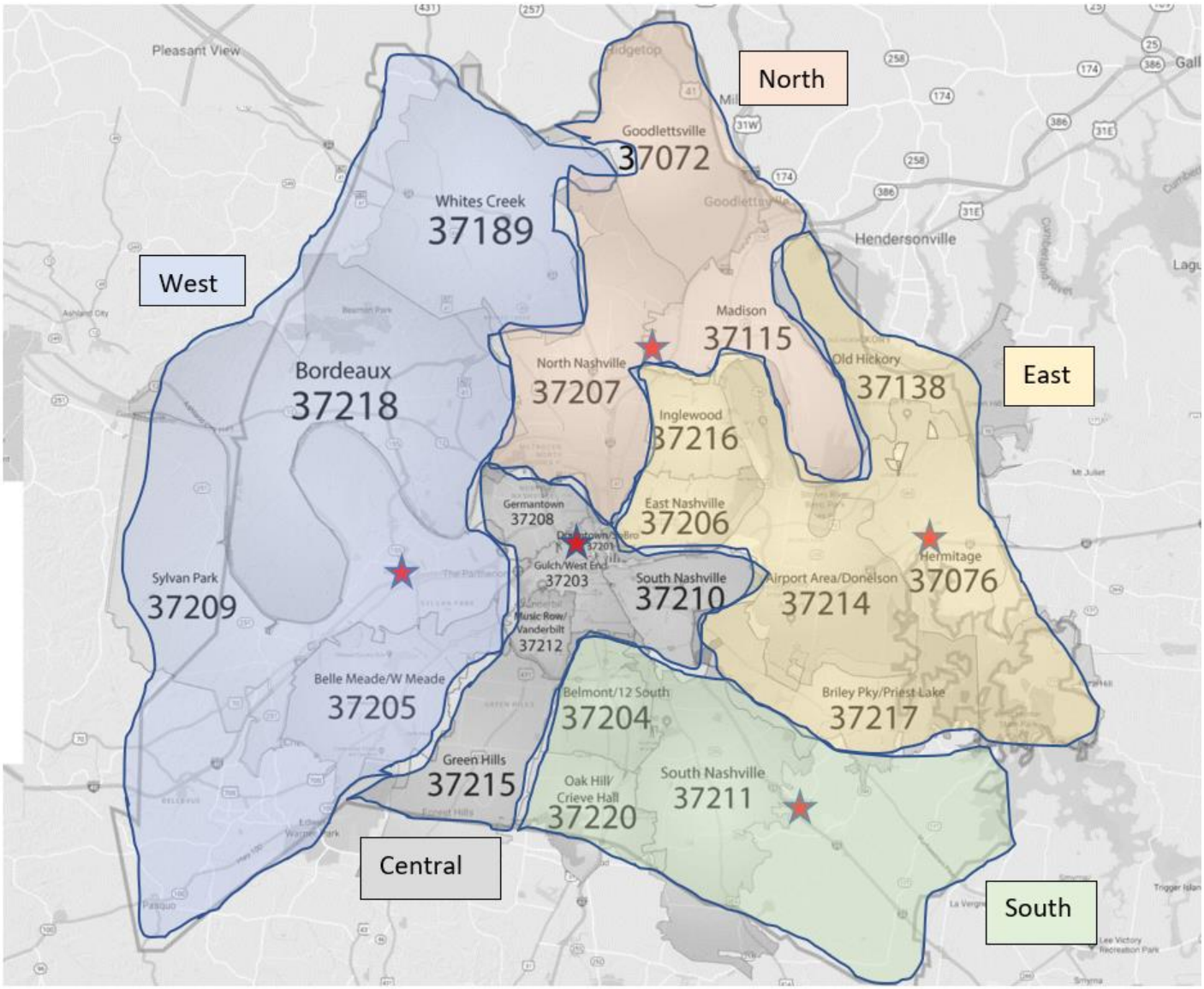

Schedule 2: Space Needs Analysis

Space Needs Analysis Report
SNA Number: 32901-19-05
Agency: Correction
County: DAVIDSON City: Nashville
Employees: 39

Prepared By: FMG
Checked By:

SNA Date: 11-29-2022

Area Needed:	5,933
Major Circulation: 50%	2,967
Total Net Usable Needed:	8,900

SNA Note: Agency requested report for Central District 40 (District Office). Current office is located at 220 Blanton Avenue. AWS report. Refer to agency Office Space Needs Worksheet dated 11/09/22 for additional information.

Space Type	*Standard*	*Description*	*Wall*	*Area*	*Count*	*Memo*
P	00000	Administration	None	0	2	Mobile. Space included in Free Address area. Positions will use Free Address area when in office.
P	00000	Contract Staff	None	0	2	Mobile. Space included in Free Address area. Positions will use Free Address area when in office.
P	78139	Executive	None	0	1	Mobile. Space included in Free Address Office. Position will use Free Address Office when working from this location.
P	71844	Probation Parole Manager	None	0	4	Mobile. Space included in Free Address area. Positions will use Free Address area when in office.
P	78142	Probation Parole Officer	None	0	30	Mobile. Space included in Free Address area. Positions will use Free Address area when in office.
S	BHSA	Behavioral Health Specialist Area	0	49	1	Also used as Counselor Area
S	BR	Break Room	H	180	1	
S	CIR	Client Interview Room	H	72	3	Used for conducting interviews with clients without the need for client to leave the waiting room area. Each room will require 2 doors. 1 - accessible from waiting room (for client use) and 1 - accessible from staff office side of waiting room (for staff use). Each room will be separated by a wall with pass thru glass window between client and staff with each side having a 2 deep work surface.
S	CR	Computer Room	H	120	1	NCIC/TIES
S	CR	Conference Room	H	655	1	Program Room.
S	CA	Counselor Area	None	0	0	Shares space with Behavioral Health Specialist
S	DTWR	Drug Test Prep. Rm	H	100	1	
S	DTR	Drug Testing Room	H	100	1	
S	ELA	Employee Locker Area	0	64	1	

Printed On 11/29/2022

Page 1 of 2

SNA Number: 32901-19-05

Space Type	*Standard*	*Description*	*Wall*	*Area*	*Count*	*Memo*
S	E	Enclave	H	120	2	
S	FR	File Room	H	624	1	
S	FR	Fingerprint Room	H	100	1	
S	FAA	Free Address Area	0	49	1	Used by Administration.
S	FAA	Free Address Area	0	49	15	Used by Probation Parole Officers.
S	FAA	Free Address Area	0	49	2	Used by Probation Parole Manager
S	FAO	Free Address Office	H	120	1	Used by Executive
S	GSR	General Storage Room	H	50	1	
S	GSR	GPS Storage Room	H	50	1	
S	GIR	Group Intake Room	H	400	1	
S	HC	Hoteling Cubical	0	49	5	For visiting staff, volunteers and temp. employees.
S	IR	Interview Room	H	120	3	
S	JPKC	J-Pay Kiosk Closet	H	40	1	
S	LFA	Lateral File Area	0	304	1	
S	MA	Mail Area	0	48	1	
S	MFP	Multi-Function Printer	0	50	2	
S	PSB	Paper Shredder Bin	0	6	2	
S	PFA	Program Facilitator Area	0	49	1	
S	RA	Reception Area	0	49	1	
S	RB	Recycle Bin	0	6	2	
S	SRA	Shared Reception Area	0	49	1	
S	SC	Storage Cabinet	0	16	2	
S	SR	Supply Room	H	122	1	
S	TC	Telecom. Closet	H	80	1	For telephone and computer equipment. Room must be temperature controlled.
S	TOA	Training Officer Area	0	49	1	
S	WR	Waiting Room	H	432	1	Space for 20 chairs (400 sq.ft.) and Two - Client Locker units (32 sq.ft.).

Suggested Range:	Min.	Max.
Usable:	8,900	9,800
Rentable:	9,800	10,700

Printed On 11/29/2022

Page 2 of 2

SCHEDULE 3: DOC Special Buildout Specifications

The space must be for professional office use and capable of meeting all the requirements of the agency, including geographic location, square footage, parking and any special requirements identified below and in the following schedules:

Facility should have separate public and staff restrooms; they will NOT share the same plumbing wall.
Building should have separate staff and client entrance/exits.

Reception workstation is to have an electronic buzzer to release secure door nearest the station.

There will be a J-pay machine installed in the lobby area which requires a roll up door on the front and direct access from the Staff Only space of the lease space with double doors accessible from the rear in order to repair and load the machines. There must be an electrical outlet and data outlet for the machine. See photo below for roll up door.

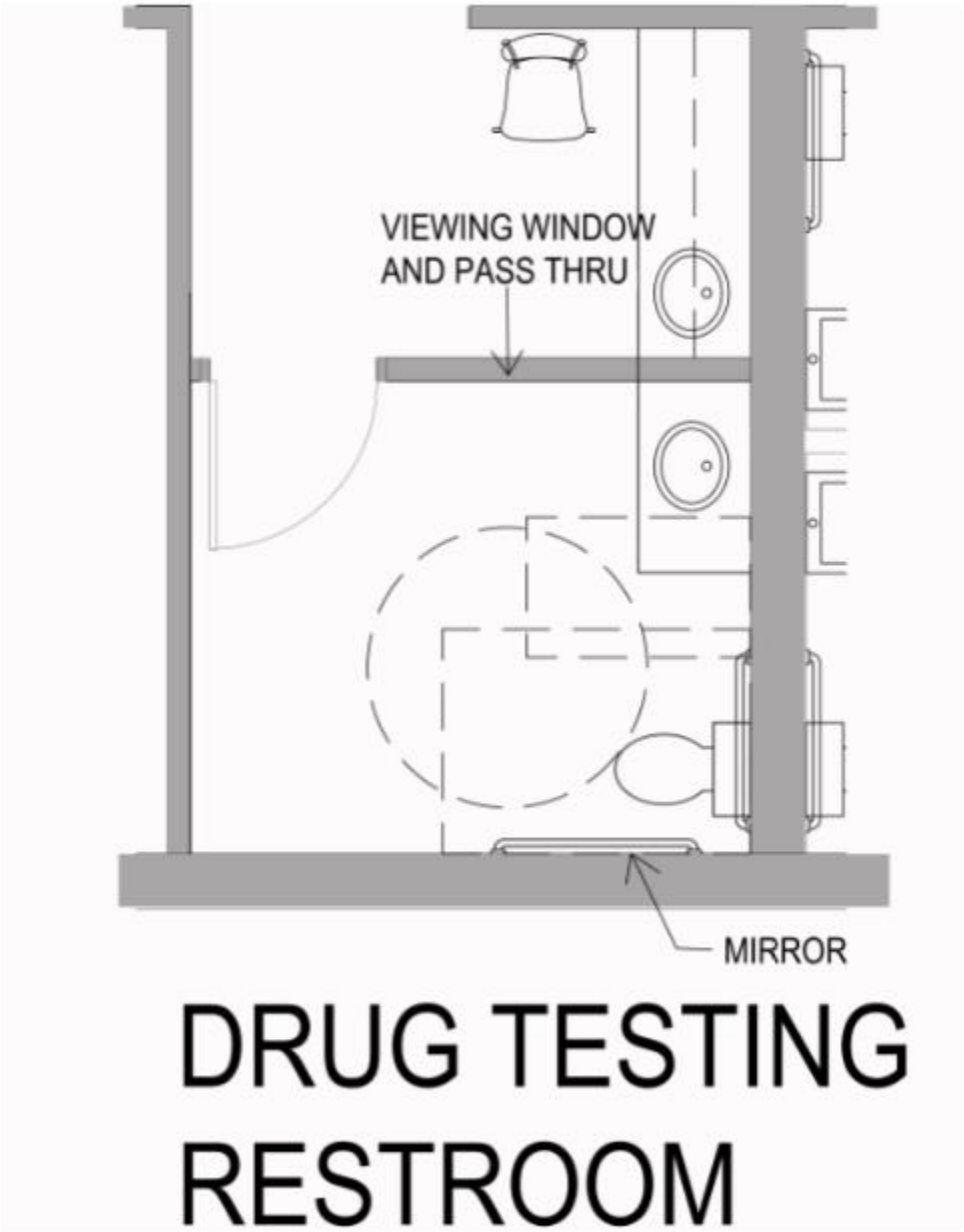
VIEWING WINDOW
AND PASS THRU
MIRROR
DRUG TESTING
RESTROOM

The drug testing room will have a hard surface counter top and under counter, lockable casework with sink in the anteroom outside of actual restroom.

Schedule 4: Window Elevations

A. Drug Testing Transaction Window with Door

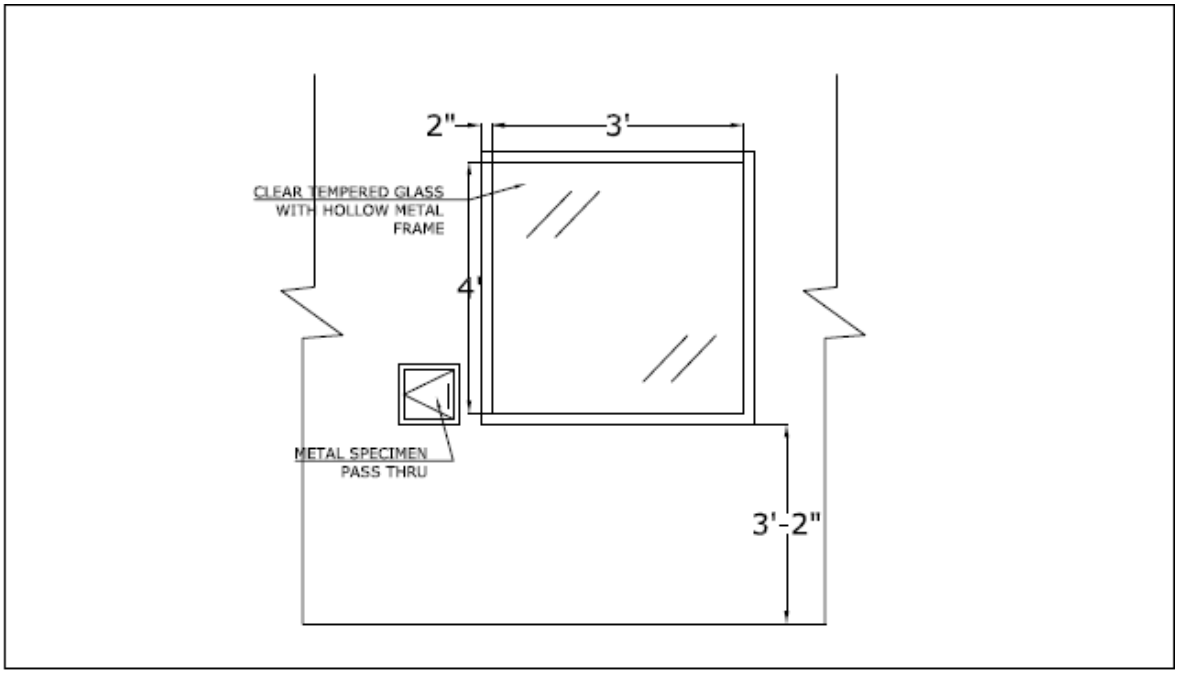

1 A2.4 DRUG TESTING/PREP WINDOW TYP.
SCALE: 1/4"=1'0"

*NOT for construction. Final size determination will be dependent upon site and code requirement.

B. Lobby/Reception Transaction Windows

A reception window measuring a minimum of 45” x 45” (final measurements depending on site selected as referenced in window elevations below) will be installed between the waiting area and reception area.

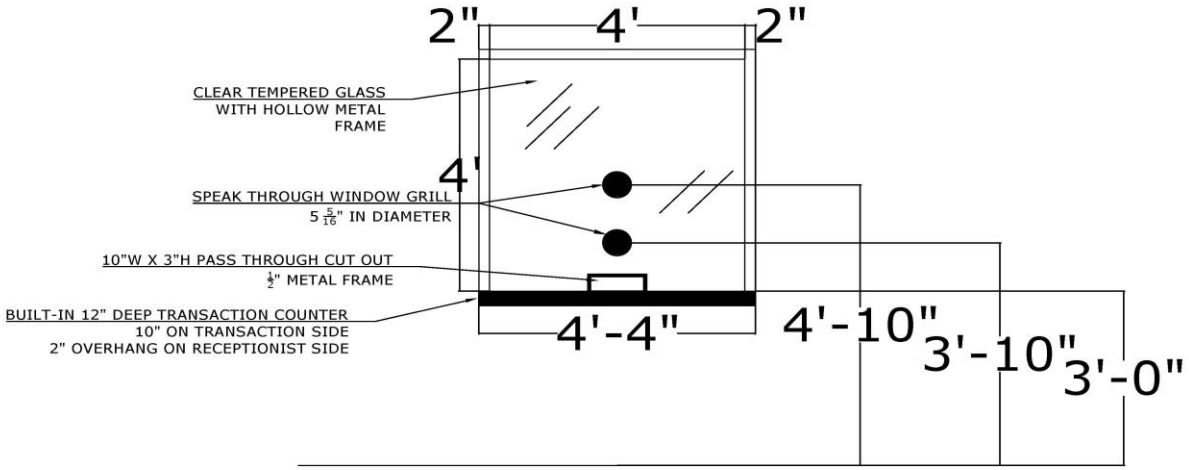

A RECEPTION WINDOW TYP.
SCALE: 1/2"=1'0"

SIGNER :
AIL :
.L :
V 1 YRMODAY
:UED YRMODAY
nsaction#

RECEPTION WINDOW TYP.
AGENCY CONTACT INFO :
AGENCY SIGN OFF/ DATE:
ADDRESS :

NOT FOR CONSTRUCTION
**NOTE: This space plan, including furniture layout, has been developed based on programming information and input from the State of Tennessee and is considered to be the design intent. The Architect of Record will utilize this information to develop complete construction documents, in compliance with applicable codes and regulations.

STATE OF TENNESSEE
DEPT. OF GENERAL SERVICES
STREAM
WRS Tennessee Tower, 24th
312 Rosa L. Parks Ave
Nashville, Tennessee 37243

TN

C. Client Interview Room Window and Pass-Thru

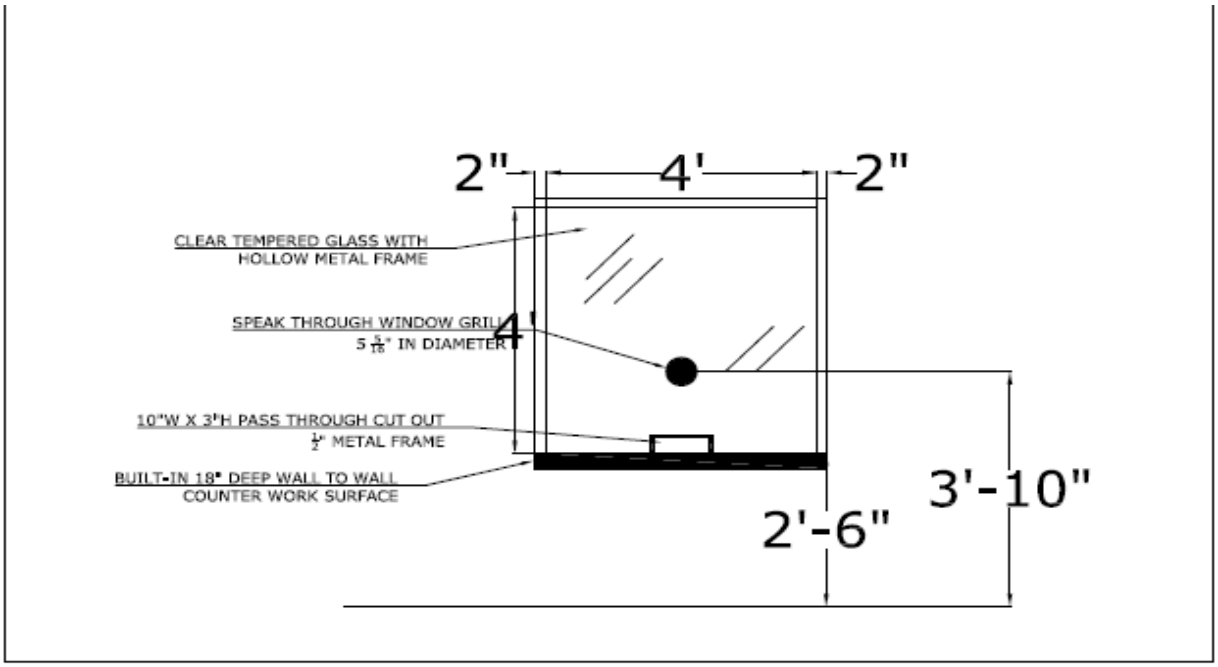

1 A2.1 CLIENT INTERVIEW WINDOW TYP.
SCALE: 1/4"=1'0"

*NOT for construction. Final size determination will be dependent upon site and code requirement.

Schedule 5: DOC Concept Plan

This is a concept plan to illustrate the function of how the Department of Correction (DOC) operates in a typical office environment. It should NOT be used to price construction but only to provide a "concept" of how the agency conducts business in the space. Each office requirement differs for each county across Tennessee and the State reserves the right to layout the space to best fit the needs of DOC in Davidson County, TN. Per Paragraph #19 (Landlord buildout) of the Lease Agreement, the State must approve the final design and construction plans.

(Not To Be Used For Construction)

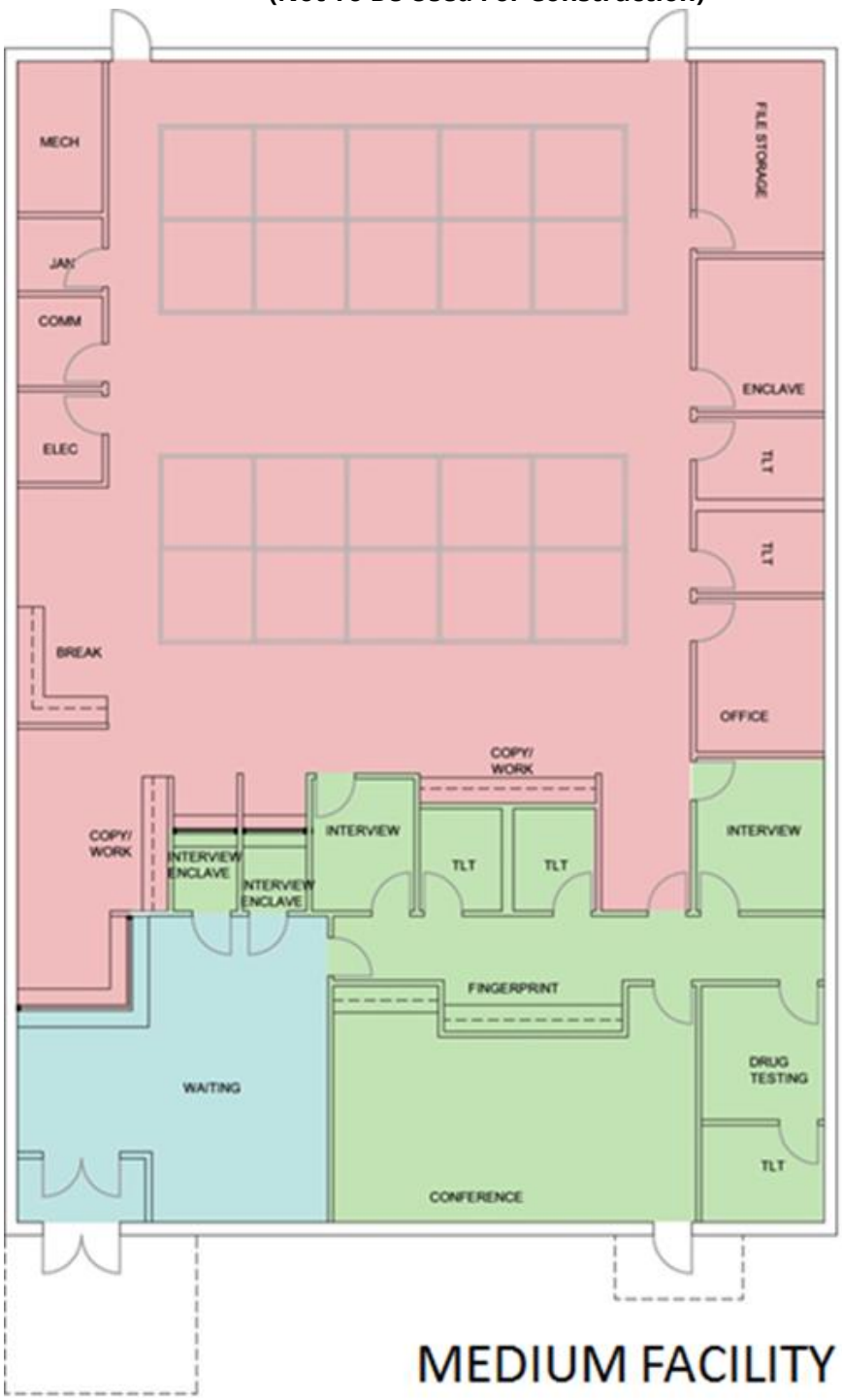

A. Security Zone Concepts

Leased space should be designed to establish a minimum of three levels of security to protect staff and secure records within the lease areas.

1. The first interior zone, Zone 1, should surround the Waiting Room and the visitor restrooms. Walls surrounding this zone should extend to the roof or ceiling deck.
2. The second zone, Zone 2, should surround areas where staff generally interact with visitors/offenders; the Interview rooms, Drug Testing, Group Intake, Finger Print areas, and other areas as designated.
3. Zone 3 will make up the remaining leased space, mostly general staff work areas.
4. Doors between Zones 2 and 3 will require ID swipe card readers or punch code locks for access. (agency expense)

B. Parking:

1. Officer/staff parking lot: preference is for this separate lot to be located adjacent to a side or rear staff entrance. One building exit should be directly adjacent to a staff parking lot to facilitate removal of an offender in a non-public setting.
2. The agency prefers for visitor/offender parking layout to include two access/enter points, if possible.
3. Secure "fleet car" paved parking, if required (to be determined after Agency has seen location), should not be located more than 300-feet from a staff entrance and requires an 8-feet high security fence and separate swipe activated or key-coded electric vehicle & pedestrian gates. Fencing in metropolitan areas should include BTO coil at the top instead of typical bard wire topping.

C. General Building Design Issues:

1. Exterior walls should be masonry or brick veneer construction and should not include typical "storefront" window-wall assemblies.
2. Provide exterior site lighting at all building entry/exit doors and area lighting for all parking & pedestrian areas.
3. The building entrance door(s) and customer waiting area should be fully visible to the receptionist.
4. Front door(s) to the Waiting Room should be full glass doors. Front door entry shall include a vestibule design with doors not providing a direct view into the building.
5. Interior door(s) of Waiting Room vestibule should also be full glass.

- No corridor to the back of the building should be directly in line with the front door.
- Design space (windows, sidelights, etc.) so that staff can monitor ingress/egress for either the front or back of the building.
- Smoking is not permitted in leased facilities. However, the Lessor must provide a designated smoking area no closer than 50 feet to any lease entrance.

D. Building Exterior Signage:

- Road/frontage signage shall be provided if space is not visual from main frontage road.

E. Exterior Windows:

- Exterior office windows should generally be 5-feet above the floor to prevent straight look into the interior staff spaces. TDOC may accept window tinting in existing lease spaces. Provide window treatment/blinds for all exterior windows, preferably metal blinds, furnished at Landlords expense.

F. State ID Swipe Card or Punch Code Entry System:

- NOTE- Hardware including electric strikes and magnetic locks if required to be provided by Landlord.

- The following rooms should be accessed by a 'card swipe' system using State ID's or punch code locks installed at Agency expense: all side/rear employee entry doors, Conference Rooms, File Rooms, Telecommunications Room and other rooms as requested. Interior entry/exit access doors between 'Security Zones' will require swipe or punch code access at Agency expense.

G. Waiting Room/Lobby Sizing (Secure Zone 1):

- Design waiting areas so that receptionist can easily watch the waiting area, Client Window(s), and entrance doors at all times. See example.
- Provide electrical release for door from waiting area to staff area, controlled by receptionist. Provide motion detector/request for release button on the staff side of door.
- The visitor restrooms should be located in the Waiting Room. Provide both male and female visitor restrooms.
- Staff restrooms should not be located in the same area as client restrooms, and preferably not on the same plumbing wall.
- Provide drinking fountain in waiting area and separate drinking fountain for staff located in staff work area.
- Provide wall blocking and power and data outlet for TDOC-provided TV.

H. Conference Rooms:

- Conference rooms need to have power/data outlets in ceiling (for ceiling-mounted projection equipment).
- One wall (longest dimension) should be a full floor-to-ceiling whiteboard (paint type system).
- Conference Rooms shall have outside access doors (confirm layout with tenant).

I. Drug Testing Rooms (Secure Zone 2):

- Stainless Steel counter tops.
- Door should swing out of the room, if possible.
- Floor finish should be vinyl tile.
- High-ceiling mirror above toilet installed by lessor and a cased opening pass-thru to monitoring room
- Include space for under-counter refrigerator (provided by TDOC).

J. Staff Break Room:

- Provide wall blocking and power and data outlet for TDOC-provided TV. Coordinate with tenant for location.

K. File Rooms:

- Electrical outlets in file areas with standard 5-drawer filing cabinets shall be set at 60-inches AFF.

L. Security Cameras:

- Provide data lines with double junction box mounting and conduit to the Telecommunications Room for the following camera locations; adjacent to all exterior entry doors, the Waiting Room and other locations, based on the lease space required, within the staff areas based on the final space layout.

M. Building Maintenance:

- Janitorial services shall not be allowed within leased areas unless TDOC staff is available or approved otherwise by TDOC staff.
- Cleaning products need to be low in Volatile Organic Compound and moderately acidic or alkaline.
- Janitorial services need to inspect building walls, and systems and ventilation ductwork, monthly, to confirm no freestanding water, mold, or mildew is present.

N. Building Evacuation Plans:

- Provide drawings showing only walls and room names. These drawings will be used for start-up planning and fire evacuation diagrams by TDOC.
- Include room and door numbers.

Schedule 6: Signage Specifications (not for construction)

**** Please see documents for full signage package at www.tnlpr.gov***

TNSG-VNL-001-OP-FS-020W

DOOR VINYL

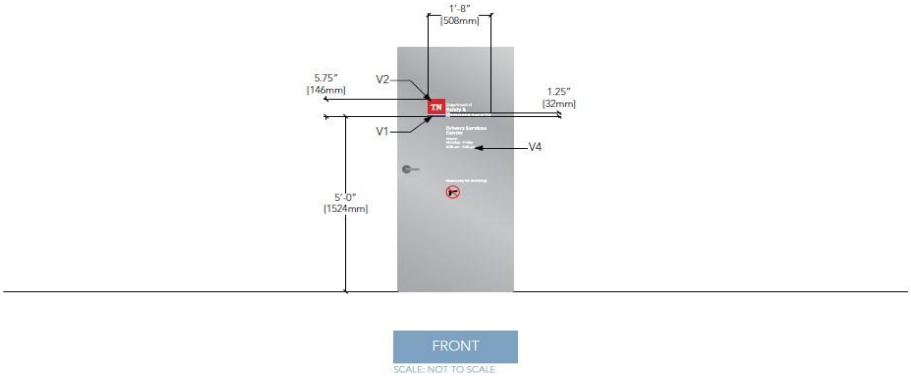

PAINT & VINYL

V1 • ORACAL 751-049 KING BLUE
V2 • ORACAL 751-326 SINGLE RED
V4 • 3M 7725-10 WHITE

MOUNTING/INSTALLATION

- CLEAN SURFACE PRIOR TO INSTALLATION

FABRICATION NOTES

- VINYL APPLIED 1ST SURFACE

TNSG-PPL-000-NL-DF-000H

NON-ILLUMINATED DOUBLE FACE POST AND PANEL

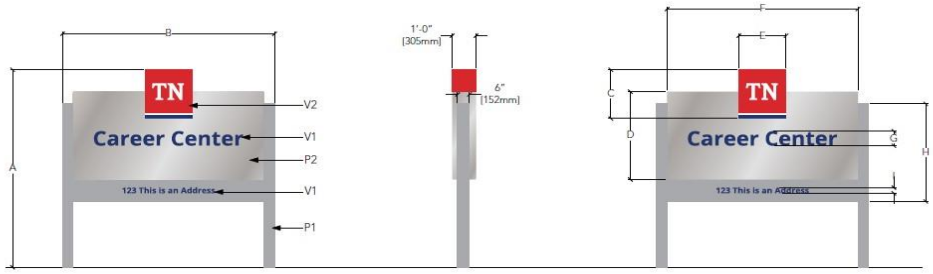

FRONT
SCALE: NOT TO SCALE

SIDE
SCALE: NOT TO SCALE

BACK
SCALE: NOT TO SCALE

NOMENCLATURE	A	B	C	D	E	F	G	H	I	SQ. FT.
TNSG-PPL-001-NL-DF-081H*	6'-0" [2057mm]	6'-8" [2032mm]	1'-8" [508mm]	3'-0" [914mm]	1'-6" [457mm]	6'-0" [1829mm]	6" [152mm]	3'-4" [1016mm]	2.5" [64mm]	45
TNSG-PPL-002-NL-DF-108H*	9'-0" [2743mm]	9'-0" [2743mm]	2'-2.67" [677mm]	4'-0" [1219mm]	2'-0" [610mm]	8'-0" [2438mm]	8" [203mm]	4'-5" [1346mm]	3.25" [83mm]	81

PAINT & VINYL

P1 • MP 71537 COOL GRAY 6
P2 • MP 41 342 BRUSHED ALUMINUM
V1 • ORACAL 751-049 KING BLUE
V2 • ORACAL 751-326 SINGLE RED

MATERIAL

- 0.125" ALUMINUM SHEET
- ALUMINUM TUBE
- ALUMINUM CHANNEL

MOUNTING/INSTALLATION

- STUB OUTS

FABRICATION NOTES

- 0.125" ALUMINUM FABRICATED CABINET WITH FACES VERSILOCK TO FRAME
- MAIN CABINET PAINTED P1, TOP CABINET PAINTED P2
- V1 VINYL APPLIED 1ST SURFACE FOR ADDRESS AND CAREER CENTER
- TN LOGO FABRICATED WITH V1 AND V2 APPLIED 1ST SURFACE

*POST AND PANELS DO NOT SCALE PROPORTIONALLY WHEN SIZED UP.

**** The below pictures are examples onlyto show State branding and how exterior signage may look.***

TN
Department of
Children's and
Human Services

Schedule 7: Lease Exhibit D

GENERAL SPECIFICATIONS

1. **General**
   a. The Leased Premises, including all common areas and points of ingress and egress, shall be designed and maintained to meet all applicable code requirements for commercial office building construction, including the requirements of the Americans with Disabilities Act.
   b. The Leased Premises shall have a current occupancy permit issued by the local jurisdiction at the time of Tenant's occupancy.
2. **Site**
   a. The site shall be fully graded, landscaped and maintained in a manner commensurate with market for comparable properties of the same property type and class as the Leased Premises.
3. **Structure**
   a. Space above ceilings must allow sufficient clearance for ease of installation of Tenant's mechanical and electrical equipment, including but not limited to distribution ductwork, HVAC boxes, lighting and conduit.
   b. The building foundation and below-grade spaces shall be protected with a properly installed foundation drainage and waterproofing system.
4. **Building Skin and Roof**
   a. The building skin and roof will be complete and weather-tight including all exterior finish materials, cladding, sealants, glass and glazing including vision and spandrel glass, store front glass, exterior doors and hardware, membrane or built-up roofing, ballast, flashing, and other elements required to make the building weather-tight.
5. **Building Common Areas**
   a. The building entrance lobby, common corridors, restrooms, mechanical spaces, loading dock, trash removal spaces, and other common areas will be substantially complete.
   b. Restrooms shall be complete with all fixtures, partitions, accessories, lavatories, lavatory tops, and mirrors. Fixtures, partitions, and accessories shall be institution grade or better, and shall be water saving type, as appropriate. The finishes in restrooms shall be commensurate with market for comparable properties of the same property type and class as the Leased Premises.
6. **Common Walls**
   a. Common walls shall include slab-to-slab gypsum wallboard on the public side of all demising walls, corridors, stairwells, and other walls not interior to the Tenant space. All common walls shall be taped, blocked, finished and sanded. Landlord will install sound attenuation insulation on Tenant side of Common Walls and demising walls prior to Tenant finishes being installed.
   b. Common walls shall include entry and exit doors from common areas furnished and installed by Landlord. Doors and hardware shall be building standard or better.
7. **Electrical**
   a. Landlord shall provide a minimum of 7 watts per square foot for lighting and power.
   b. Landlord shall install all main switchboards, panel boards, distribution boards, transformer, bus duct, feeders and other equipment to completely distribute power to electrical closets on each floor in the Leased Premises. Landlord shall locate an electrical service panel in the electrical closet in the

Common Area on the same floor as the Leased Premises. Installation of electrical service up to and including the Tenant's service panel(s) shall be a base building cost.

c. Landlord shall install all wiring, branch circuiting, conduit and devices for the complete electrical system to all public and common areas. Landlord shall provide at Landlord's expense all power wiring and connection for all mechanical equipment furnished as part of base building. Landlord shall provide at Landlord's expense all power wiring to life safety and fire protection systems.

8. Communications

a. Landlord shall bring data/telephone service, as provided by the local data/telephone operating company, to the building Main Telephone Room.

9. Lighting

a. Landlord shall furnish and install lights in all common areas.

b. Building lighting levels must meet a minimum of 30 foot-candles at the desk and 20 foot-candles in corridors providing ingress and egress to the Leased Premises. Base building shall include a lighting level of at least 10 foot-candles or minimum levels to insure safety in other interior areas as set by the current version of the Illuminating Engineering Society of North America (IESNA).

10. Plumbing

a. Plumbing tie-ins shall be provided for State's use for break room or other functions required by the Permitted Use.

11. HVAC

a. Building common areas shall include heating, ventilation, and air conditioning systems in accordance compliance with current ASHRAE standards.

b. All HVAC for the Leased Premises shall be installed with complete distribution to ceiling mounted diffusers and perimeter slot diffusers for exterior zones and distribution to VAV boxes for interior zones.

12. Building Directory

a. If the Building has multiple tenants, Landlord shall provide a directory in the lobby of the Building.

b. Landlord shall add Tenant's name to directory, and shall provide Tenant suite signage (suite entry door plaque or hall plaque, matching building graphics standards).

13. Keys

a. Landlord shall supply Tenant with five (5) sets of keys at no cost. Additional keys shall be provided at Tenant's request at a reasonable cost. Keys should allow access to the Leased Premises, parking areas and other common areas of the Property.

14. Access Control

a. Landlord shall provide new locks on all exterior doors and doors into common areas.

b. Tenant may install card access to the Leased Premises at suite entry locations, fire stairs with access into the Leased Premises and interior doors within the Leased Premises compatible with the base building security system.

c. Provide heavy-duty cylindrical hardware within suite and heavy duty mortised lockset at suite entry doors.

d. Provide locksets on the following doors: offices, enclaves, communication rooms, utility rooms, storage/file rooms, network rooms.

INTERIOR BUILDOUT SPECIFICATIONS

1. **Ceiling**
   a. Existing ceiling tile and grid shall remain if these materials meet the Minimum Qualification Specification (Section e below) and are in good and attractive condition. Patch and repair grid as needed to accommodate demolition of walls. Replace any damaged or discolored tiles to match existing.
   b. Existing lighting shall be cleaned and re-lamped after construction. All lamps shall be the same color temperature. Coordinate the appropriate lamp color with the State.
   c. Provide 15’-20’ whip at all above-ceiling junction boxes for power pole connections.
   d. Minimum ceiling heights shall be a minimum of 8 feet and be proportionate to the open area floor plate size.
   e. Acoustical Panel Ceiling Minimum Qualification Specifications:
   f. General Ceiling
      i. Acoustical Panel Standard: Comply with ASTM E 1264.
      ii. Metal Suspension System Standard: Comply with ASTM C 635.
      iii. Attachment Devices: Size for five times the design load indicated in ASTM C 635, Table 1, "Direct Hung," Comply with seismic design requirements.
   g. Acoustical Panels
      i. Color: White.
      ii. LR: Minimum of 0.83.
      iii. NRC: Minimum of 0.60, Type E-400 mounting according to ASTM E 795.
      iv. CAC: Minimum of 33.
      v. Modular Size: 24 by 24 inches (610 by 610 mm) or 24 by 48 inches (610 by 1220 mm).
2. **Electrical and Communication**
   a. Provide and install conduit, conductors, pull wires, boxes, cover plates, devices, etc., for all outlets as required by the Build Out Plans. All devices shall be a consistent color.
   b. Contractor shall be responsible for all coordination and final electrical connections for furniture (systems furniture, conference/training tables, etc.). Coordinate with State for specifics on wiring configurations. For general planning purposes, provide 1 circuit per every 2 standard workstations as required by the Build Out Plans.
   c. Provide 1 voice/data per standard workstation as required by the Build Out Plans.
   d. Provide 2 duplex power outlets and 1 voice/data per standard office as required by the Build Out Plans.
   e. Provide 2 duplex power outlets and 1 voice/data per enclave as required by the Build Out Plans.
   f. At minimum, all enclosed rooms (such as storage and file rooms) to have (2) convenience duplex power outlets as required by the Build Out Plans.
   g. Lighting and controls shall be properly zoned. Separate light switches for hardwall spaces shall be provided as required by the Build Out Plans.

3. Partitions

a. All existing perimeter sill walls and core walls throughout space shall be freshly painted in an eggshell or satin paint finish.

b. All new partitions to be 5/8" drywall and 3 5/8" metal studs with sound attenuation blankets inside the partition. Additional sound blankets to be provided above partitions on ceiling tile, 2'-0" on either side of all new or existing partitions not extending to the deck.

c. Partitions around all new conference rooms, training rooms, break rooms, meeting rooms, and restrooms, shall extend to the deck. Sound attenuation blankets shall be provided inside the partition, seal all penetrations within partitions including power/data boxes and at the connection of the partition to the deck.

d. Connections from partition to mullion will require an acoustically sealed connection.

e. Finish partitions completely to floor.

4. Glazing

a. All office, enclave, break room, and conference room front walls shall have a 3'-0" wide sidelite with ¼" clear tempered glass in 2" welded hollow metal frame with a solid core door (match building standard), and etched film on 3'-0"w full height sidelights. Framing for glass sidelights and windows shall be integral with doorframes and not separated by drywall.

5. Doors and Frames

a. Interior doors shall match building standard height and finish; at a minimum, all doors shall be solid core, 7'-0" in height.

b. Interior doorframes shall be 2" welded hollow metal steel, painted.

c. All hardware shall match existing building standard finish. At a minimum, all hardware shall be lever handle. All doors shall include the following: doorstops, silencers, lever hardware, mortised ball bearing hinges. All office doors shall include a coat hook. In addition, pairs of doors shall include the following as determined by function: dummy trim, closer coordinators, flush bolts, dust proof strikes, ball catch (as required).

d. All main entrance public access doors shall be metal frame glass storefront entrance type with double-pane glass. Exterior exit doors shall be metal framed with insulated flush type metal door. All exterior doors must be equipped with commercial grade closers and hardware.

6. Finishes

a. Doors, frames, hardware, ceiling tile and grid and lights shall be reused if approved by the State.

b. Carpet shall be modular tiles laid with low VOC adhesives. Carpet shall generally be laid in a monolithic, ashlar or brick laid pattern. Carpet shall not be laid in a quarter turn pattern unless noted specifically.

c. Carpet must meet the following minimum qualification specifications:

i. Products: All manufacturers to provide modular tile products as specified below and in addition to meeting the minimum requirements.

ii. Commercial Face Fibers: High performance premium branded Nylon required to be third party certified post-consumer recyclable and defined as a commercial grade nylon fiber from a carpet or fiber manufacturer nationally recognized by the flooring industry; the nylon fiber shall have a documented five (5) year minimum successful testing period; Note: OLEFIN FIBER IS NOT ACCEPTABLE.

iii. Pile Characteristic: Level-loop, Cut-and-loop pile, Shear-and-loop pile.

iv. Density: Minimum rating of 5,000 or higher.
v. Stitches: Minimum of 9 stitches per inch.
vi. Gage: 1/12 inch minimum.
vii. Surface Pile Weight: Minimum 20 oz. per square yard.
viii. Dye System: Minimum of 50% solution dyed or yarn dyed (Type 6, Type 6,6 or proven equal).
ix. Backing System: Provide applicable backing system based on carpet type/brand selected.
x. Size: 24 by 24 inches (610 by 610 mm) or larger.
xi. Applied Soil-Resistance Treatment: Duratech, Protech, or equal (specify with proposal).
xii. Antimicrobial Treatment: Manufacturer's standard material according to AATCC174.

d. Provide 4" coved rubber base in areas specified to receive new flooring. All base shall be continuous roll base (not 4' segments).
e. All walls to have one prime coat and 2 finish coats of eggshell or satin finish. Door and window frames shall have semi-gloss finish. Drywall ceilings shall have flat finish.
f. Where identified as laminate finish on casework, use color core laminates for exposed surfaces for doors, drawers, counter tops and splashes. The underside of all vertical laminate panels in wet areas shall receive a laminate or pvc edge to prevent water from wicking up through laminate panel substrates. Counters and splashes shall be thoroughly caulked to walls and countertops using clear silicone caulk.

7. Break Rooms

a. Finishes: VCT floor tile in a floor pattern using 3 different colors, plastic laminate base and wall cabinets.
b. Provide double bowl, under mount stainless steel sink with hot/cold water.
c. Provide dedicated outlets for refrigerators, microwaves, and (2) coffee makers. Provide (3) standard wall duplex outlets at 42" AFF in kitchen area. Provide (2) additional wall outlets at other walls for convenience purposes.

8. Copy Rooms / Areas

a. Finishes: VCT flooring, plastic laminate base and wall cabinets, plastic laminate countertop. Cabinetry shall be sufficient to meet the needs of the Tenant at its sole discretion.
b. Provide (2) wall duplex outlets (one circuit) and (2) voice/data outlets at 42" AFF in work area.

9. Telecom Rooms

a. Finishes: VCT flooring, 4" rubber base.
b. Walls shall extend to deck; no lay-in ceiling.
c. A minimum of a half-ton (5,000 BTU's) of cooling for coverage of equipment is required. Stand-alone mechanical unit is preferred. If stand-alone is not possible, then the space should be removed from the EMS and have VAV-type controls.
d. Provide at least a 3" conduit from the interior telecom room or non-common space to an exterior right of way or utility easement for new service provider connection. Coordinate with service provider.
e. Each telecom room should be a minimum of 8' x 10' in size, with one room per 15,000 square feet of usable space. Telecom rooms shall align vertically if in a multiple-floor facility.

f. Doors to telecom rooms shall open out into the corridor, if possible. If this is not possible, then locate the door in an area with minimal clearance impact.
g. Provide at least (2) dedicated quad outlets, 110 volt, 20 amp circuits, in addition to the normal service outlets.
h. The State cabling contractor, at State's expense, shall install a grounding bus bar and place correctly-sized conductor back to the main panel for facility personnel to connect.
i. Telecom rooms do not include space for building/energy automation/management, life safety controls, or security, audio, or CC/CATV systems.

10. Conference Rooms

a. All conference rooms that seat (8) people or more shall have (2) power and voice/data outlets. Larger Conference rooms of greater than (18) people shall have (4) power and (2) voice/data outlets.
b. Lighting switching shall provide flexibility for a variety of scene configurations for different presentations and meetings. Fixtures shall provide both ambient lighting to the table as well as accent wall wash lighting at the perimeter of the room.
c. Coordinate placement of switches, AV screens, furniture, & doors so as to avoid conflicts when components are in use.

11. Restrooms

a. All restrooms shall be equipped with liquid soap dispensers and mirrors, and either paper towel dispensers or hand blow dryers.
b. Provide a floor drain in each restroom.

12. Janitor Closet

a. Finishes: VCT flooring, 4" rubber base.
b. Provide storage for equipment, materials, and supplies, in a minimum 25 sf room.
c. Provide service sink with hot and cold water and a floor drain.

13. Building Interior

a. Provide (accessible) chilled drinking fountains as per code requirements. If it is deemed necessary to replace existing or incorporate additional drinking fountains, equipment shall be able to accommodate a water bottle refill component.
b. Provide evacuation maps and other interior signage as required and requested by the State. Coordinate locations with the State.

14. Building Exterior

a. Provide exterior canopies at all building entrances and exits, as well as a vestibule/airlock at all public entrances.
b. Provide exterior signage and dumpster access.
c. Hard-surface exterior walkways shall be provided to connect all Building entrances and exits to on-site parking lots or other hard-surfaced areas.