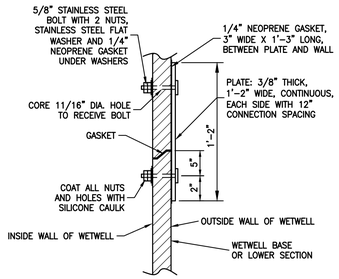

DETAIL TO MECHANICALLY CONNECT WETWELL SECTIONS IF MORE THAN ONE SECTION IS USED

N.T.S.

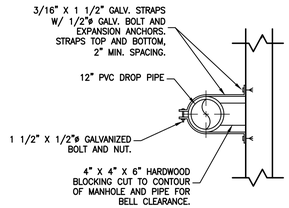

BRACKET DETAIL

N.T.S.

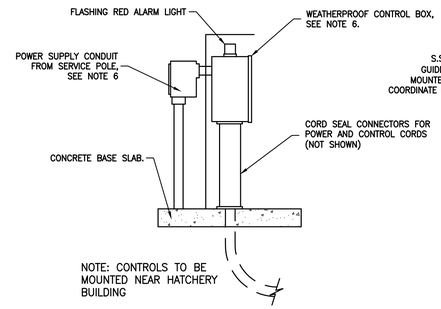

CONTROLS DETAIL

N.T.S.

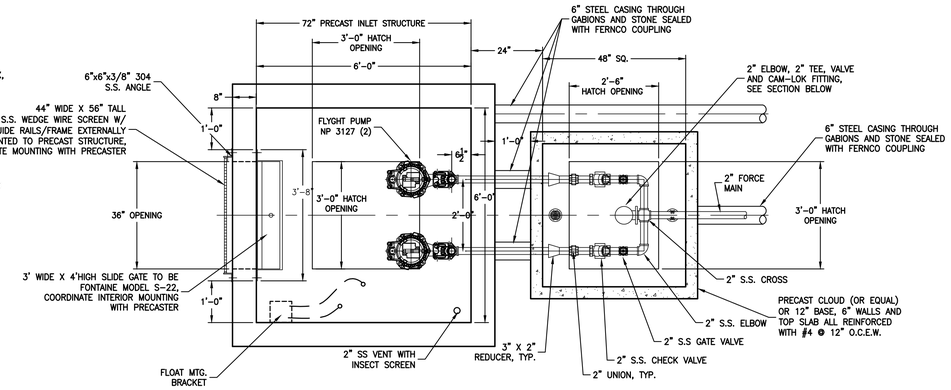

PLAN VIEW

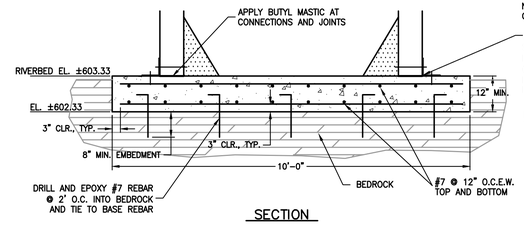

NOTE: COORDINATE PRECAST TO CAST-IN-PLACE SLAB CONNECTION WITH PRECASTER, SEE NOTE 7.

6" X 6" X 3/8" 304 S.S. ANGLE IRON WITH 5/8" STAINLESS STEEL ANCHOR BOLTS AND 1" SS WASHER INTO BASE SLAB AND PRECAST STRUCTURE EVERY 12" O.C., 3" MINIMUM AWAY FROM EDGES. COORDINATE 3/4" DIAMETER HOLE LOCATIONS WITH PRECASTER. THROUGH BOLT ANCHORS TO PRECAST STRUCTURE.

NOTE: BOTTOM OF BASIN MUST HAVE SMOOTH TROWELED SURFACE FOR MTG. SUPPORT CASTING.

SECTION

INTAKE STRUCTURE, SLAB

SCALE: 1/2" = 1'-0"

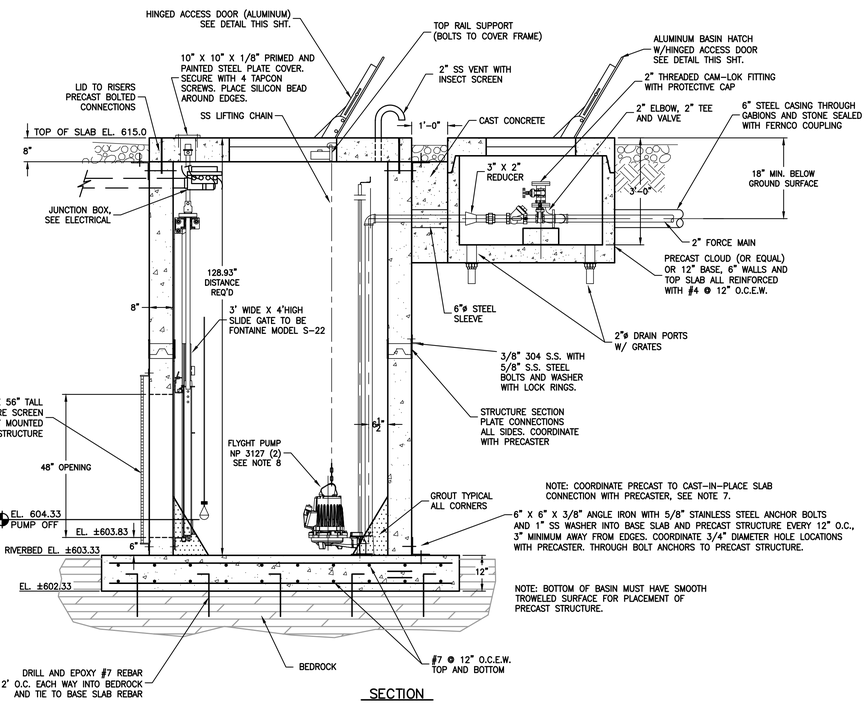

NOTE: COORDINATE PRECAST TO CAST-IN-PLACE SLAB CONNECTION WITH PRECASTER, SEE NOTE 7.

6" X 6" X 3/8" ANGLE IRON WITH 5/8" STAINLESS STEEL ANCHOR BOLTS AND 1" SS WASHER INTO BASE SLAB AND PRECAST STRUCTURE EVERY 12" O.C., 3" MINIMUM AWAY FROM EDGES. COORDINATE 3/4" DIAMETER HOLE LOCATIONS WITH PRECASTER. THROUGH BOLT ANCHORS TO PRECAST STRUCTURE.

NOTE: BOTTOM OF BASIN MUST HAVE SMOOTH TROWELED SURFACE FOR PLACEMENT OF PRECAST STRUCTURE.

SECTION

INTAKE STRUCTURE, PUMPS & VALVE BOX

SCALE: 1/2" = 1'-0"

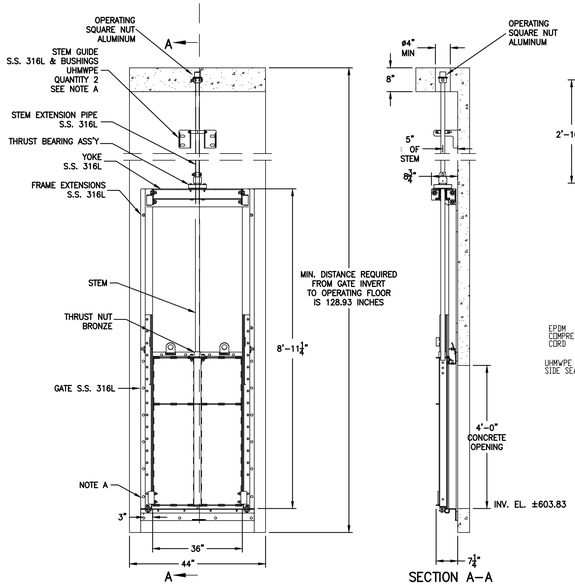

NOTE A

: ANCHORS SS 316 TO BE SUPPLIED BY CONTRACTOR.

MECHANICAL: HILTI KWIK BOLT 3 OR BETTER, 1/2" [13mm] DIA.X 3.5" [89mm] EMBEDMENT IN 2000 PSI [14 Mpa] CONCRETE.

ADHESIVE: HILTI HVA OR BETTER, 1/2" [13mm] DIA.X 4.25" [110mm] EMBEDMENT IN 2000 PSI [14 Mpa] CONCRETE.

QTY: 28

STAINLESS STEEL SLIDE GATE – SERIES 20

General Notes

1. Drawing is not to scale
2. Design pressure: 6.00 m seating and unseating
3. Gates are fully compliant to AWWA C561-14

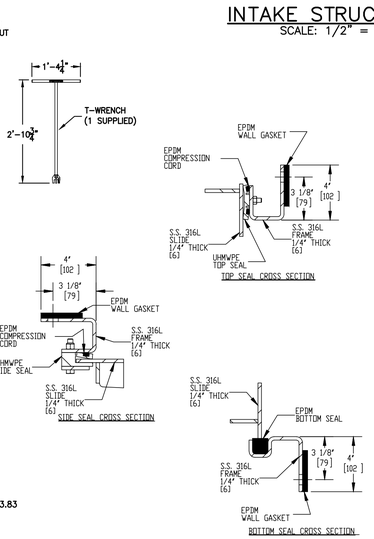

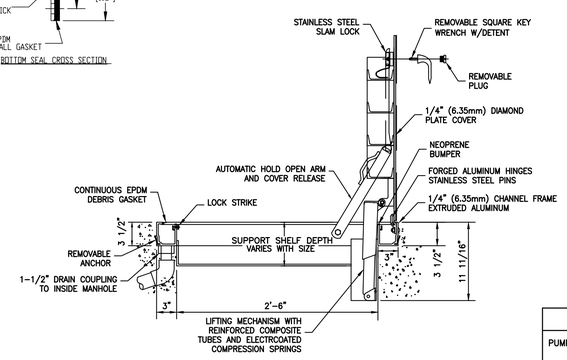

BILCO TYPE J-3ALH20 ACCESS DOOR

N.T.S.

NOTES:

1. ALL CONCRETE TO COMPLY WITH ACI 318 WITH A MINIMUM STRENGTH OF 4,000 psi AT 28 DAY TEST.
2. ALL PRECAST RISERS AND TOPS TO CONFORM TO ASTM C478.
3. MANHOLE STEPS TO BE NEENAH R-1982-W PROVIDE WITHIN 12" OF TOP, 16" O.C.
4. IF INLET STRUCTURE IS CONSTRUCTED OF MORE THAN ONE SECTION, THEN EACH SECTION SHALL BE MECHANICALLY CONNECTED TO THE LOWER SECTION AND/OR THE BASE. SEE DETAIL THIS SHEET.
5. INLET STRUCTURE IS CLASSIFIED AS "CONFINED SPACE" BY OSHA.
6. CONTROL PANEL TO BE PROVIDED BY PUMP PROVIDER INSTALLED AS SHOWN. CONTRACTOR TO INSTALL POWER AND CONTROL CONDUIT AND WIRE TO INTAKE LOCATION. PUMP VENDOR TO SUPPLY PUMPS, CONTROL PANEL, VFD, FLOATS, GUIDE RAILS, LIFTING CHAIN, BASE ELBOW, FLOAT MOUNTING BRACKET, AND CABLE HOLDER.
7. SHOP DRAWINGS PER PRECAST STRUCTURE AND ALL CONNECTIONS, INCLUDING CONNECTION TO BASE SLAB, SHALL BE STAMPED BY A REGISTERED PROFESSIONAL ENGINEER IN THE STATE OF TENNESSEE FOR THE APPLIED USE AS AN INTAKE STRUCTURE SUBJECTED TO A RIVERINE ENVIRONMENT.
8. OWNER WILL SUPPLY PRECAST STRUCTURES, PUMPS, PUMP CONTROLLER, HATCHES,SLIDE GATE, AND SCREEN. CONTRACTOR SHALL ACCEPT AND INSTALL OWNER SUPPLIED EQUIPMENT AND PROVIDE ANY AND ALL APPURTENANCES TO COMPLETE THE WORK.

DISCHARGE PIPING TABLE

PUMP STATION ID	DISCHARGE ELBOW
RAW WATER INTAKE	3"

DUPLEX PUMP STATION SCHEDULE

PUMP DESIGN FLOW, Q (GPM)	FORCEMAIN LENGTH (ft.)	FORCEMAIN DIAMETER (inches)	FORCEMAIN DISCHARGE ELEVATION	TOTAL DYNAMIC HEAD (ft.)	PUMP MODEL #	HP	POWER (VOLTAGE, PHASE, FREQUENCY)	NOTES
Q_1= 80 GPM Q_2= 35 GPM	527	2	±665	114_1(Q) 69_2(Q)	FLYGT NP3127 SH3 ~ APAPTIVE 249 146 MM IMPELLER	11	230, 3, 60	1. PROVIDE VARIABLE FREQUENCY DRIVE FOR PHASE CONVERTER FOR SINGLE PHASE POWER SUPPLY. 2. CONTRACTOR TO COORDINATE AND PROVIDE STARTUP OF PUMP SYSTEM WITH PUMP SUPPLIER.

PROJECT NO. 707-190

DATE: JUNE 2025 | DRAWN BY: DSM | CHECKED BY: RRM | APPROVED BY: RRM | SCALE: AS NOTED | SHEET NO. 5

INTAKE STRUCTURE DETAILS

TENNESSEE WILDLIFE RESOURCES AGENCY
LILLARD'S MILL ACCESS AREA
MARSHALL COUNTY, TENNESSEE

SUBMITTALS & REVISIONS

DATE	BY	NO.	DESCRIPTION
6/18/2026			SUBMITTED TO TWRA – FINAL REVIEW SET

© 2025 Griggs & Maloney, Inc.

L:\Engineering\707 TWRA\707-190 Lillard Mill\DRAWINGS\RAW WATER INTAKE\Drawings submitted to TWRA - Final Review Set\707-190 Sht 5 Intake Structure Details 6-16-26.dwg LAYOUT: MODEL SAVED: 6/17/2026 2:48 PM PAGESETUP: ---- PLOTTED: 6/18/2026