TOWN OF ALAMO
2018 ALAMO WATER SYSTEM IMPROVEMENTS

A2H ENGINEERS ARCHITECTS PLANNERS

CONSTRUCTION DOCUMENTS
FEBRUARY 5, 2019
PROJECT NUMBER 17410

APPROVED: John A Gorman
JOHN GORMAN
ALAMO WATER SYSTEM
02/12/2019

CIVIL ENGINEER

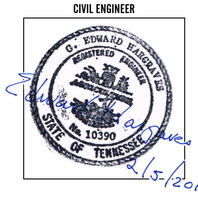

2/5/2019

ELECTRICAL ENGINEER

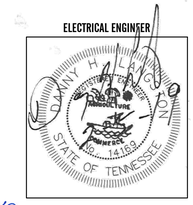

SCADA CONTROLS ENGINEER

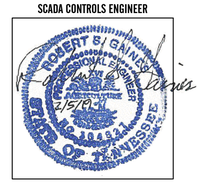

2/5/19

ALAMO, TN

A2H, INC.
3009 DAVIES PLANTATION ROAD
LAKELAND, TN 38002
P. 901.372.0404
WWW.A2H.COM

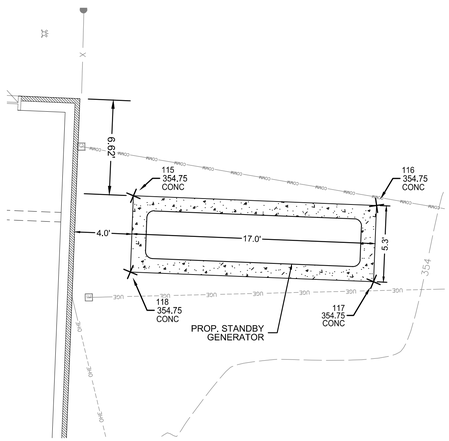

B1 | 1" = 5' | ENLARGEMENT

NORTH — GRAPHIC SCALE: 1" = 5' (5 0 5)

NOTES:

ELEVATIONS MAY CHANGE BASED ON SELECTION OF AERATOR AND REQUIRED INLET ELEVATION.

CONTRACTOR TO ADJUST AIR STRIPPER SLAB BASED ON DIMENSIONS OF SELECTED AIR STRIPPER SO THAT INFLUENT PIPES OF NEW AND EXISTING AT TOP OF AIR STRIPPER ARE AT THE SAME ELEVATION.

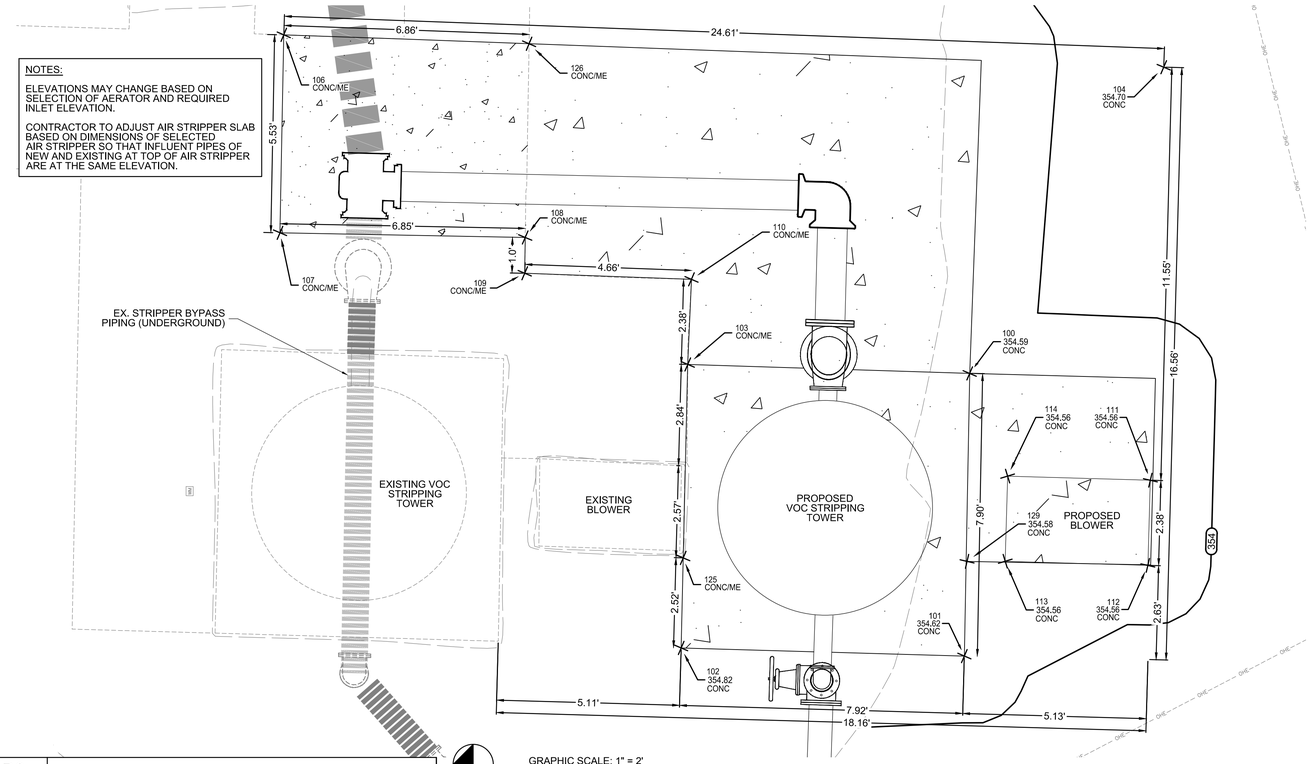

B3 | 1" = 2' | ENLARGEMENT

NORTH — GRAPHIC SCALE: 1" = 2' (2 0 2)

LAYOUT COORDINATES				
POINT NO.	NORTHING	EASTING	ELEVATION	DESCRIPTION
100	542839.77	1043734.63	354.59	CONC
101	542839.92	1043726.72	354.62	CONC
102	542847.83	1043726.95	354.82	CONC
104	542834.35	1043743.18	354.70	CONC
105	542816.31	1043697.75	354.62	CONC
111	542834.72	1043731.64	354.56	CONC
112	542834.79	1043729.26	354.56	CONC
113	542838.78	1043729.37	354.56	CONC
114	542838.71	1043731.75	354.56	CONC
115	542834.95	1043782.79	354.75	CONC
116	542817.97	1043782.12	354.75	CONC
117	542818.18	1043776.79	354.75	CONC
118	542835.17	1043777.47	354.75	CONC
119	542819.37	1043801.91	355.25	CONC
120	542826.37	1043801.21	355.25	CONC
121	542825.11	1043804.37	355.25	CONC
122	542819.20	1043800.50	355.25	CONC
129	542839.84	1043729.37	354.58	CONC

POINT LEGEND

180 123.45 CONC	CONCRETE
181 CONC/ME	MATCH EXISTING CONCRETE
182 123.45 PAD	CORNER OF CONCRETE PAD

D1 | NTS | LAYOUT POINTS

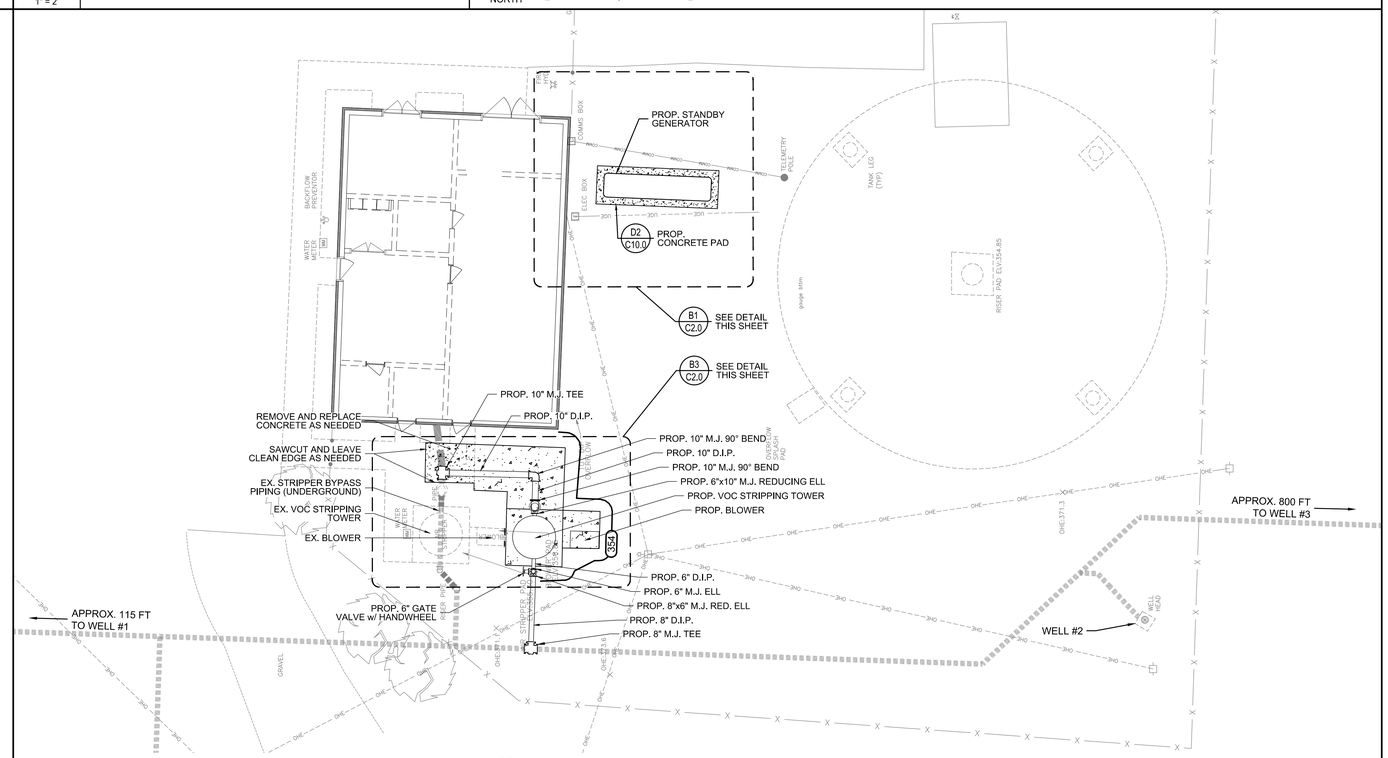

D3 | 1" = 10' | SITE PLAN

NORTH — GRAPHIC SCALE: 1" = 10' (10 0 10)

A2H ENGINEERS ARCHITECTS PLANNERS

A2H, INC.
3009 DAVIES PLANTATION ROAD
LAKELAND, TN 38002
P. 901.372.0404
WWW.A2H.COM

G. EDWARD KASSELMAN REGISTERED ENGINEER No. 10390 STATE OF TENNESSEE

2/5/2019

TOWN OF ALAMO

2018 ALAMO WATER SYSTEM IMPROVEMENTS

ALAMO, TN

CONSTRUCTION DOCUMENTS

REVISIONS

PROJECT NO.	DATE
17410	FEBRUARY 5, 2019
DRAWN	CHECKED
APL	GEH

SITE PLAN - CIVIL

C2.0

THIS DOCUMENT IS THE PROPERTY OF A2H, INC., AND ALL COMMON LAW, STATUTORY AND OTHER RESERVED RIGHTS SHALL BE RETAINED BY SAME. ANY ALTERATIONS TO THIS DOCUMENT WITHOUT THE WRITTEN CONSENT OF A2H, INC., SHALL BE PROHIBITED AND SUBJECT TO PROSECUTION. IF CHANGES ARE MADE WITHOUT CONSENT, THE LIABILITY OF ANY CLAIM IS ACCEPTED BY THE RESPONSIBLE PARTY MAKING THE CHANGE.

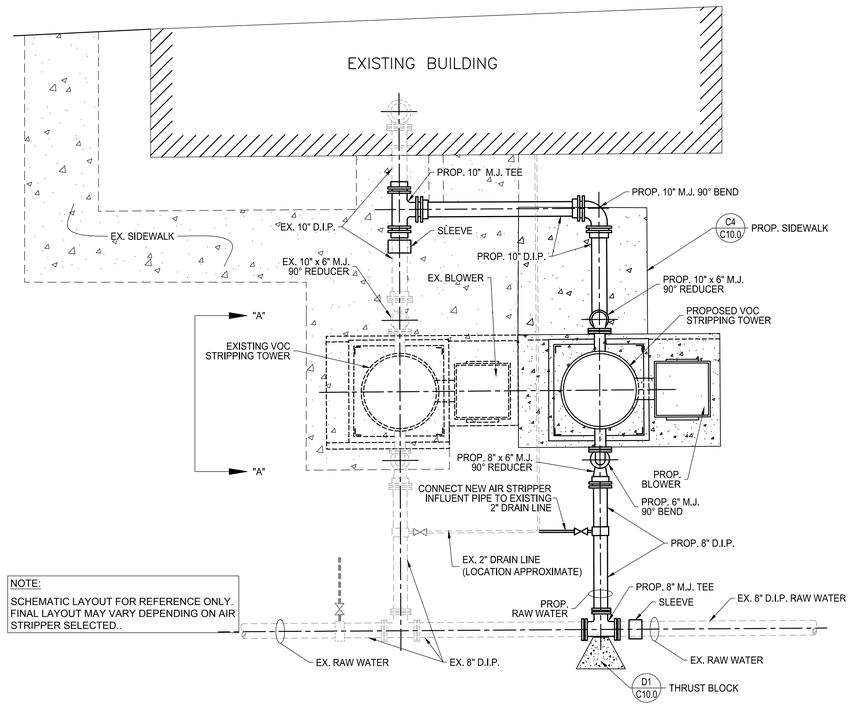

NOTE:
SCHEMATIC LAYOUT FOR REFERENCE ONLY. FINAL LAYOUT MAY VARY DEPENDING ON AIR STRIPPER SELECTED..

B1 NTS — SITE PLAN - AIR STRIPPERS

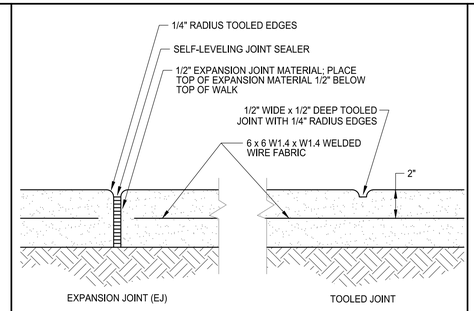

4" THICK CONCRETE WALK OF 3,000 PSI, 6%± AIR ENTRAINED CONCRETE. REINFORCE WALK WITH A 6 x 6 W1.4xW1.4 WELDED WIRE FABRIC. DO NOT CONTINUE WWF THROUGH EXPANSION JOINT (TYP.)

A3 NTS — CONCRETE JOINTS

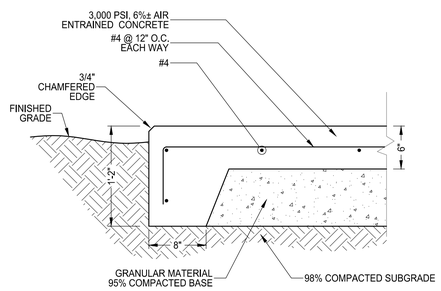

B3 NTS — AIR STRIPPER/GENERATOR CONCRETE SLAB

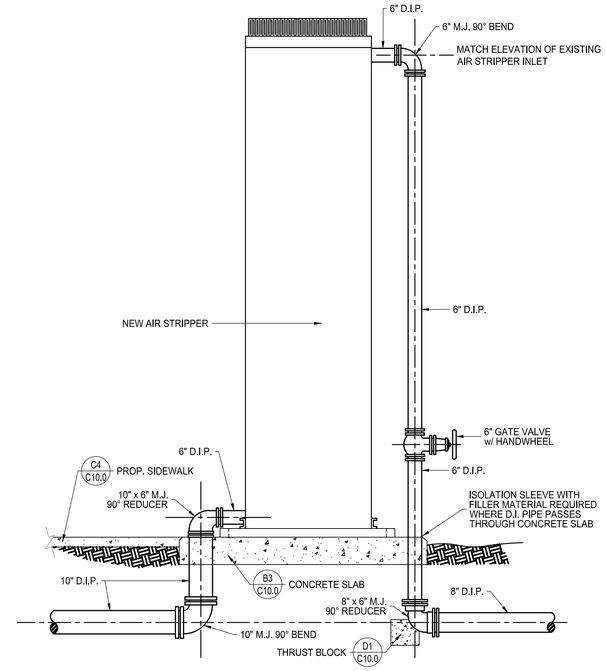

B4 NTS — AIR STRIPPER - VIEW "A"

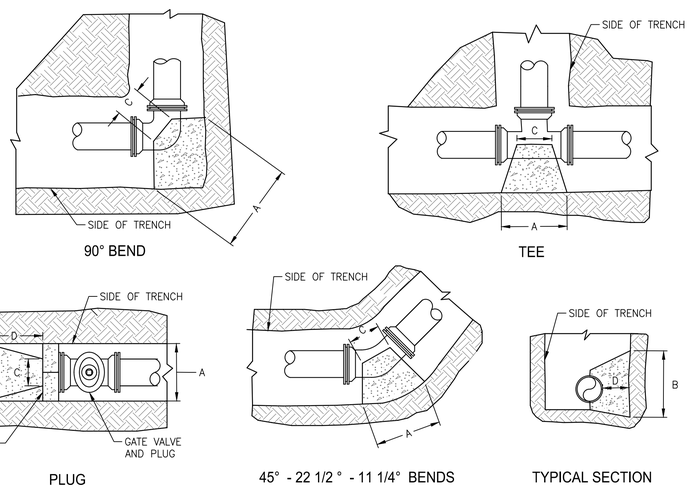

SCHEDULE FOR THRUST BLOCK AREAS

PIPE SIZE (INCHES)	90° BEND (SQ. FT.)	45° BEND (SQ. FT.)	22 1/2° BEND (SQ. FT.)	11 1/4° BEND (SQ. FT.)	TEE & PLUG (SQ. FT.)	DESIGN PRESS. (PSI)
6"	2.12	1.14	0.58	0.29	1.50	100
8"	3.64	1.97	1.00	0.50	2.57	100
10"	5.47	2.96	1.51	0.76	3.87	100

NOTE: THRUST BLOCK AREAS COMPUTED ON BASIS OF 2500 POUNDS PER SQ. FT. SOIL RESISTANCE BEARING.

THRUST BLOCK NOTES

1. THRUST BLOCK BEARING AREAS SHALL BE POURED AGAINST UNDISTURBED MATERIAL. WHERE TRENCH WALL HAS BEEN DISTURBED, EXCAVATE ALL LOOSE MATERIAL AND EXTEND TO UNDISTURBED MATERIAL.
2. EXTEND THRUST BLOCK FULL LENGTH OF FITTINGS. PUT CONCRETE BLOCKS IN FRONT OF PLUG BEFORE POURING CONCRETE. JOINTS SHALL NOT BE COVERED BY THRUST BLOCK.
3. ROUGH BLOCKING FORMS SHALL BE USED ALONG SIDES OF THRUST BLOCKS.
4. THRUST BLOCKS SHALL BE USED IN COMBINATION, AS REQUIRED, TO SUIT THE SPECIFIC FITTING ARRANGEMENT.
5. FORMS SHALL BE 1/2" WAFFERBOARD, AND SHALL BE PRECUT AND PRE-APPROVED.
6. FITTING SHALL BE WRAPPED IN POLYETHYLENE PLASTIC SHEETING.

SIZE	90° BEND				45° BEND				22-1/2° BEND				11-1/4° BEND				PLUG			
	6"	8"	10"	12"	6"	8"	10"	12"	6"	8"	10"	12"	6"	8"	10"	12"	6"	8"	10"	12"
A	26"	33"	40"	50"	18"	24"	31"	37"	13"	18"	23"	26"	11"	13"	16"	18"	26"	34"	43"	52"
B	24"	33"	40"	50"	18"	24"	31"	37"	13"	18"	23"	26"	11"	13"	16"	18"	26"	34"	43"	52"
C	12"	12"	15"	16"	10"	12"	14"	16"	10"	12"	14"	16"	10"	12"	14"	16"	12"	12"	12"	12"
D	12"	16"	20"	25"	9"	12"	15"	18"	6"	9"	11"	13"	5"	6"	8"	9"	11"	15"	22"	32"

D1 NTS — THRUST BLOCKING

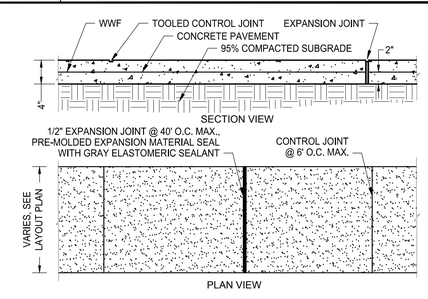

NOTE:
SIDEWALK SHALL BE 4" THICK 4,000 PSI WITH 6 x 6 W1.4 x W1.4 WELDED WIRE FABRIC REINFORCEMENTAND BROOM FINISH PERPENDICULAR TO DIRECTION OF TRAVEL.

C4 NTS — CONCRETE SIDEWALK

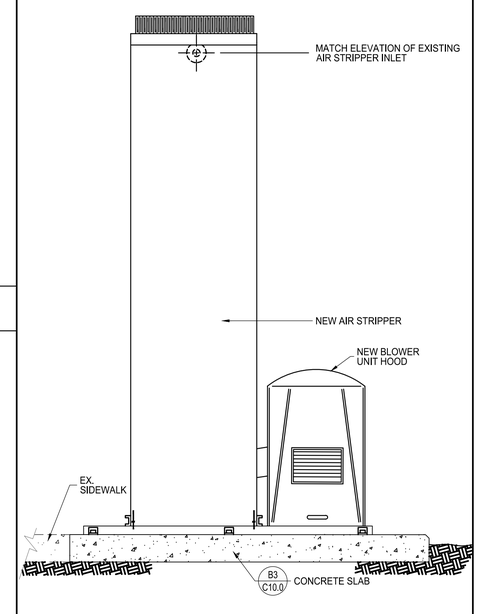

D5 NTS — AIR STRIPPER - ELEVATION

A2H ENGINEERS ARCHITECTS PLANNERS
A2H, INC.
3009 DAVIES PLANTATION ROAD
LAKELAND, TN 38002
P. 901.372.0404
WWW.A2H.COM

G. EDWARD KASSLAVES REGISTERED ENGINEER No. 10390 STATE OF TENNESSEE
2/5/2019

TOWN OF ALAMO

2018 ALAMO WATER SYSTEM IMPROVEMENTS

ALAMO, TN

CONSTRUCTION DOCUMENTS

REVISIONS

PROJECT NO.	DATE
17410	FEBRUARY 5, 2019
DRAWN	CHECKED
APL	GEH

DETAILS - CIVIL

C10.0

Andrew.
I:\2017\174102 Civil\Others\17410 - STRIPPER DETAILS.dwg
Tue, 05 Feb 2019 4:47:09pm
PLOT SCALE: 1"=1'
LATEST REV.:

THIS DOCUMENT IS THE PROPERTY OF A2H, INC. AND ALL COMMON LAW, STATUTORY AND OTHER RESERVED RIGHTS SHALL BE RETAINED BY SAME. ANY CHANGES TO THIS DOCUMENT WITHOUT WRITTEN CONSENT OF A2H, INC. SHALL BE CONSIDERED AS AN ALTERATION OF A CONTRACT DOCUMENT AND SUBJECT TO LEGAL PROSECUTION. IF CHANGES ARE MADE WITHOUT CONSENT, THE LIABILITY OF ANY CLAIM IS ACCEPTED BY THE RESPONSIBLE PARTY MAKING THE CHANGE.

D1	ELECTRICAL - SITE PLAN
1" = 10'	

NORTH

GRAPHIC SCALE: 1" = 10'
10 0 10

grant
\2017\17410\07 Electrical\Proj\Dwgs\E0.1.dwg
Tue Feb 05 2019 - 4:49pm
PLOT SCALE:
LATEST REV.:

A2H ENGINEERS ARCHITECTS PLANNERS

A2H, INC.
3009 DAVIES PLANTATION ROAD
LAKELAND, TN 38002
P. 901.372.0404
WWW.A2H.COM

DANNY HALL
REGISTERED ENGINEER
No. 115159
STATE OF TENNESSEE

TOWN OF ALAMO

2018 ALAMO WATER SYSTEM IMPROVEMENTS

ALAMO, TN

CONSTRUCTION DOCUMENTS

REVISIONS

PROJECT NO.	DATE
17410	FEBRUARY 5, 2019
DRAWN	CHECKED
GR	DHL

ELECTRICAL - SITE PLAN

E0.1

THIS DOCUMENT IS THE PROPERTY OF A2H, INC. AND ALL COMMON LAW, STATUTORY AND OTHER RESERVED RIGHTS SHALL BE RETAINED BY SAME. ANY CHANGES MADE TO THIS DOCUMENT WITHOUT THE WRITTEN CONSENT OF A2H, INC. SHALL BE CONSIDERED AN INFRINGEMENT OF COPYRIGHT AND SUBJECT TO LEGAL PROSECUTION. IF CHANGES ARE MADE WITHOUT CONSENT, THE LIABILITY OF ANY CLAIM IS ACCEPTED BY THE RESPONSIBLE PARTY MAKING THE CHANGE.

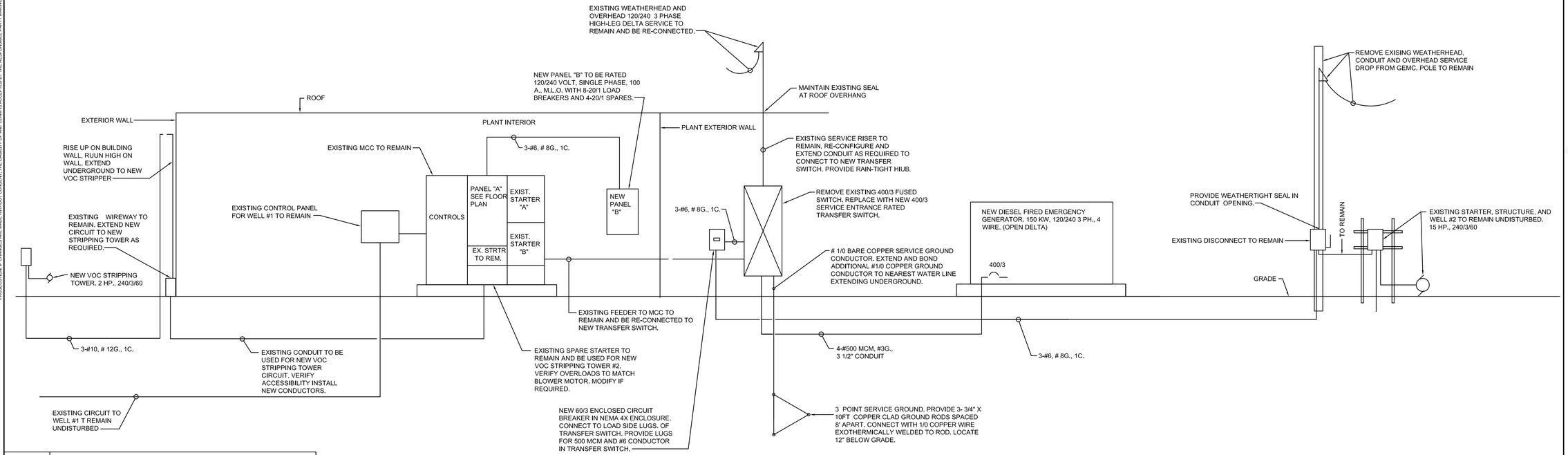

B1 | RISER DIAGRAM
N.T.S

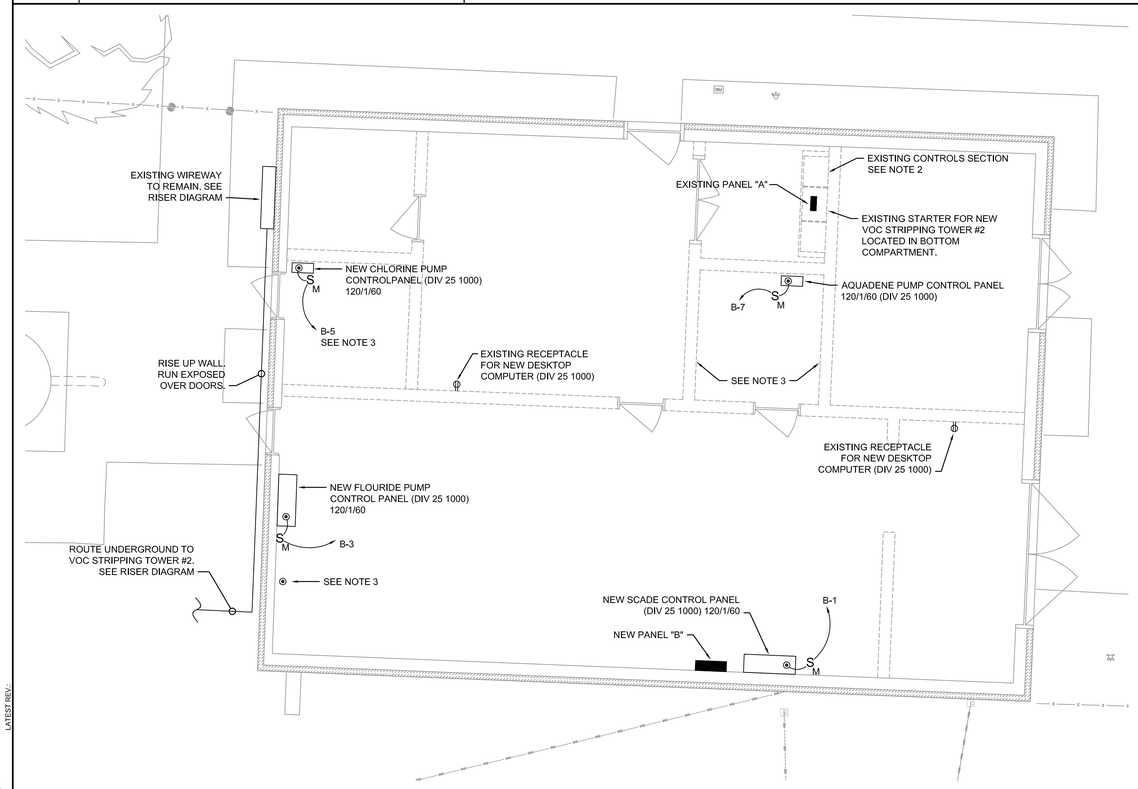

D1 | ELECTRICAL - FLOOR PLAN
1/4" = 1'-0"

NORTH

1. PROVIDE NEW 60/2 CIRCUIT BREAKER IN EXISTING PANEL "A". RE-ARRANGE EXISTING BREAKERS AND SPACES TO ALLOW FOR NEW BREAKER AS REQUIRED. PROVIDE CORRECTED PANEL DIRECTORY.
2. COORDINATE WITH DIVISION 25 100 PORTION OF WORK TO REMOVE LINE VOLTAGE CONTROL WIRING, DEVICES, ETC. AS REQUIRED, FROM CONTROL SECTION OF EXISTING MOTOR CONTROL CENTER.
3. WHERE EXISTING RECEPTACLES ARE SWITCHED TO PROVIDE CONTROL OF EXISTING EQUIPMENT, RECEPTACLES SHALL BE WIRED FOR CONTINUOUS OPERATION AS GENERAL PURPOSE DEVICES. RE-CONNECT CIRCUITS AS UN-SWITCHED, REROUTE, ETC. AS REQUIRED.

A2H ENGINEERS ARCHITECTS PLANNERS
A2H, INC.
3009 DAVIES PLANTATION ROAD
LAKELAND, TN 38002
P. 901.372.0404
WWW.A2H.COM

TOWN OF ALAMO

2018 ALAMO WATER SYSTEM IMPROVEMENTS

ALAMO, TN

CONSTRUCTION DOCUMENTS

REVISIONS

PROJECT NO.	DATE
17410	FEBRUARY 5, 2019
DRAWN	CHECKED
GR	DHL

ELECTRICAL - FLOOR PLAN

E1.1

grant
I:\2017\17410\7 Electrical\Proj\Dwgs\E0.1.dwg
Feb 05, 2019 - 3:17pm
PLOT SCALE:
LATEST REV.:

THIS DOCUMENT IS THE PROPERTY OF A2H, INC. AND ALL COMMON LAW, STATUTORY AND OTHER RESERVED RIGHTS SHALL BE RETAINED BY SAME. ANY PERSON USING THIS DOCUMENT WITHOUT WRITTEN CONSENT OF A2H, INC. SHALL BE DEEMED TO HAVE ACCEPTED THE RESPONSIBILITY FOR ANY AND ALL CLAIMS ARISING FROM SUCH USE AND SHALL INDEMNIFY A2H, INC. FOR ANY AND ALL DAMAGES, LOSSES, AND EXPENSES (INCLUDING COSTS OF DEFENSE AND ATTORNEY FEES) ARISING OUT OF OR IN CONNECTION WITH SUCH USE OR MODIFICATION. ANY REPRODUCTION OR CHANGES ARE MADE WITHOUT CONSENT. THE LIABILITY OF ANY CLAIM IS ACCEPTED BY THE RESPONSIBLE PARTY MAKING THE CHANGE.

NOTES:

1. REMOTE TERMINAL UNITS (RTU'S) TO BE FURNISHED AND INSTALLED UNDER DIVISION 25 1000 OF THE SPECIFICATIONS.

2. VERIFY ALL EXISTING CONDITIONS. COORDINATE AS REQUIRED TO POWER NEW RTU'S.

3. COORDINATE WITH GIBSON ELECTRIC MEMBERSHIP CORPORATION AND PAY ALL CHARGES TO REMOVE EXISTING OVERHEAD SERVICE TO EXISTING ABANDONED PUMP HOUSE AND RE-ESTABLISH NEW SERVICE AS SHOWN ON THIS SHEET.

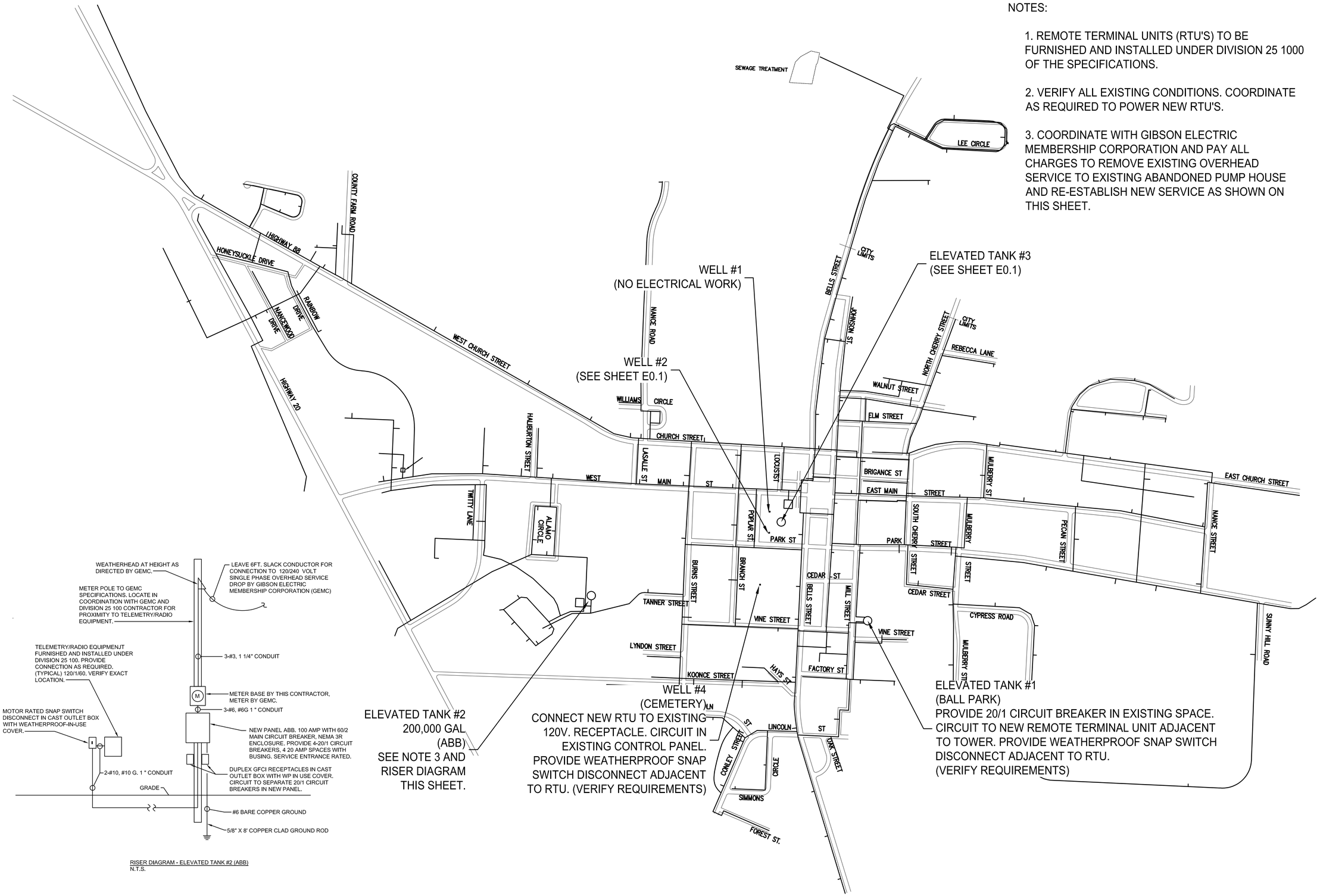

D1 | AREA PLAN - ELECTRICAL
1" = 500'

grant
12017-1714.107 ElectricalPhs\Dwgs\Alamo Water Schematic - ElectricalCal.dwg
Tue Feb 05 2019 - 4:17:00pm
PLOT SCALE: 1"=1"
LATEST REV.:

A2H ENGINEERS ARCHITECTS PLANNERS

A2H, INC.
3009 DAVIES PLANTATION ROAD
LAKELAND, TN 38002
P. 901.372.0404
WWW.A2H.COM

DANNY HALL JONES
REGISTERED ENGINEER
No. 13159
STATE OF TENNESSEE

TOWN OF ALAMO

2018 ALAMO WATER SYSTEM IMPROVEMENTS

ALAMO, TN

CONSTRUCTION DOCUMENTS

REVISIONS

PROJECT NO.	DATE
17410	FEBRUARY 5, 2019
DRAWN	CHECKED
GR	DHL

AREA PLAN - ELECTRICAL

E2.0

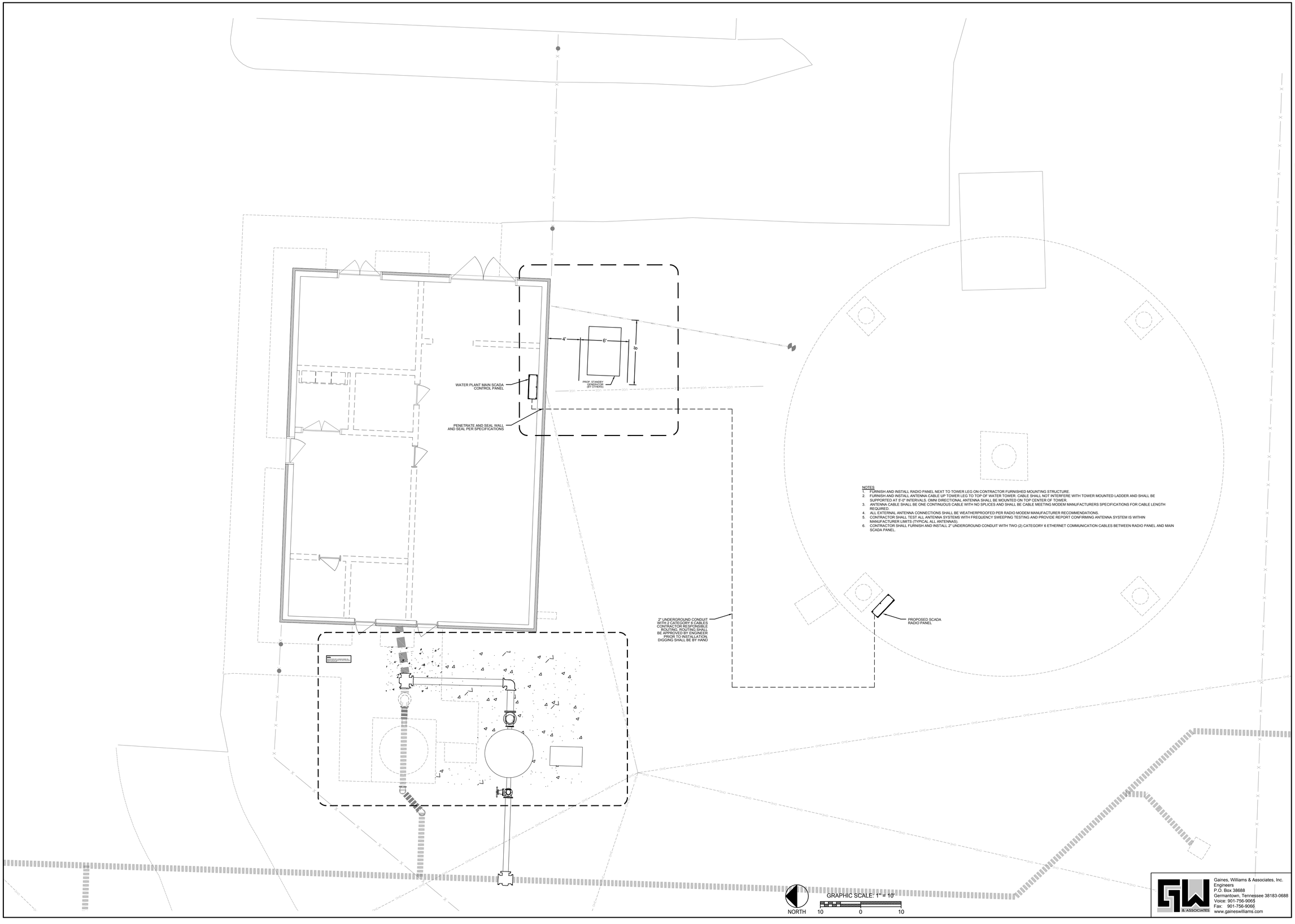

NOTES

1. FURNISH AND INSTALL RADIO PANEL NEXT TO TOWER LEG ON CONTRACTOR FURNISHED MOUNTING STRUCTURE.
2. FURNISH AND INSTALL ANTENNA CABLE UP TOWER LEG TO TOP OF WATER TOWER. CABLE SHALL NOT INTERFERE WITH TOWER MOUNTED LADDER AND SHALL BE SUPPORTED AT 5'-0" INTERVALS. OMNI DIRECTIONAL ANTENNA SHALL BE MOUNTED ON TOP CENTER OF TOWER.
3. ANTENNA CABLE SHALL BE ONE CONTINUOUS CABLE WITH NO SPLICES AND SHALL BE CABLE MEETING MODEM MANUFACTURERS SPECIFICATIONS FOR CABLE LENGTH REQUIRED.
4. ALL EXTERNAL ANTENNA CONNECTIONS SHALL BE WEATHERPROOFED PER RADIO MODEM MANUFACTURER RECOMMENDATIONS.
5. CONTRACTOR SHALL TEST ALL ANTENNA SYSTEMS WITH FREQUENCY SWEEPING TESTING AND PROVIDE REPORT CONFIRMING ANTENNA SYSTEM IS WITHIN MANUFACTURER LIMITS (TYPICAL ALL ANTENNAS).
6. CONTRACTOR SHALL FURNISH AND INSTALL 2" UNDERGROUND CONDUIT WITH TWO (2) CATEGORY 6 ETHERNET COMMUNICATION CABLES BETWEEN RADIO PANEL AND MAIN SCADA PANEL.

A2H ENGINEERS ARCHITECTS PLANNERS

A2H, INC.
3009 DAVIES PLANTATION ROAD
LAKELAND, TN 38002
P. 901.372.0404
WWW.A2H.COM

ROBERT S. GAINES
PROFESSIONAL ENGINEER
2/5/19
No. 104534
STATE OF TENNESSEE

TOWN OF ALAMO

2018 ALAMO WATER SYSTEM IMPROVEMENTS

ALAMO, TN

NOT FOR CONSTRUCTION

REVISIONS

PROJECT NO.	DATE
17410	FEBRUARY 5, 2019
DRAWN	CHECKED
RSG	RSG

SITE PLAN

Gaines, Williams & Associates, Inc.
Engineers
P.O. Box 38688
Germantown, Tennessee 38183-0688
Voice: 901-756-9065
Fax: 901-756-9066
www.gaineswilliams.com

CN1.0

NOTES
1. LOCATION OF MAIN CONTROL PANEL AND PUMP CONTACTOR PANELS ARE TENETIVE WITH FINAL LOCATIONS DETERMINED DURING CONSTRUCTION.

1" = 5'

BUILDING PLAN

Gaines, Williams & Associates, Inc.
Engineers
P.O. Box 38688
Germantown, Tennessee 38183-0688
Voice: 901-756-9065
Fax: 901-756-9066
www.gaineswilliams.com

A2H ENGINEERS ARCHITECTS PLANNERS

A2H, INC.
3009 DAVIES PLANTATION ROAD
LAKELAND, TN 38002
P. 901.372.0404
WWW.A2H.COM

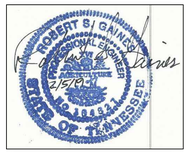

TOWN OF ALAMO

2018 ALAMO WATER SYSTEM IMPROVEMENTS

ALAMO, TN

NOT FOR CONSTRUCTION

REVISIONS

PROJECT NO.	DATE
17410	FEBRUARY 5, 2019
DRAWN	CHECKED
RSG	RSG

BUILDING PLAN

CN1.1

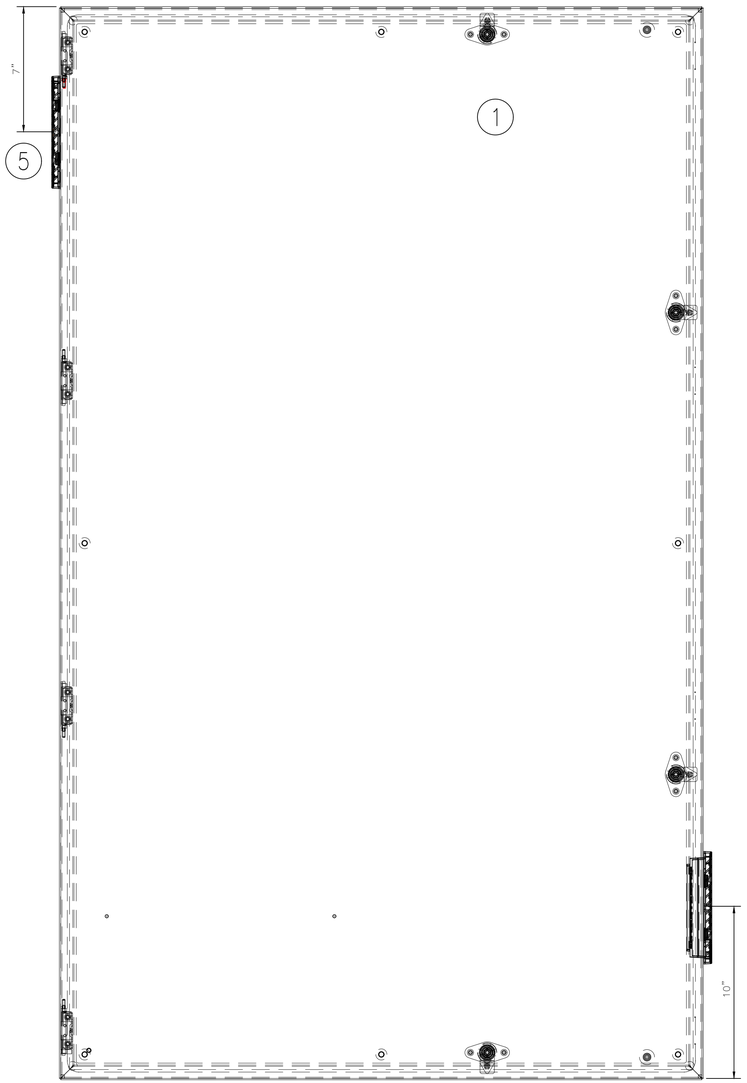

WATER PLANT
SCADA CONTROL PANEL
EXTERIOR DETAIL

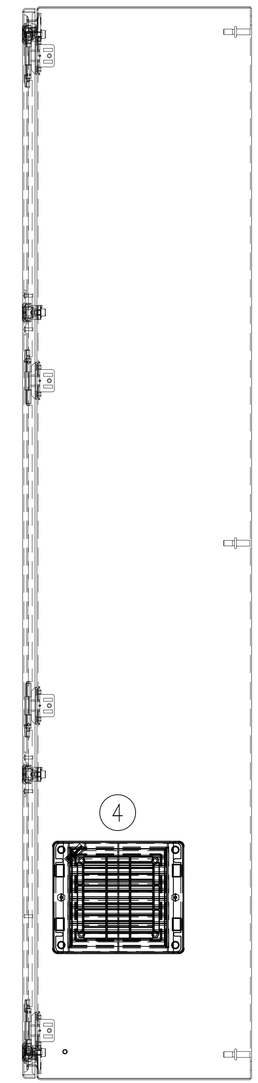

WATER PLANT
SCADA CONTROL PANEL
RIGHT SIDE VIEW

NONE

WATER PLANT SCADA PANEL

A2H ENGINEERS ARCHITECTS PLANNERS

A2H, INC.
3009 DAVIES PLANTATION ROAD
LAKELAND, TN 38002
P. 901.372.0404
WWW.A2H.COM

TOWN OF ALAMO

2018 ALAMO
WATER SYSTEM
IMPROVEMENTS

ALAMO, TN

NOT FOR CONSTRUCTION

REVISIONS

PROJECT NO.	DATE
17410	FEBRUARY 5, 2019
DRAWN	CHECKED
RSG	RSG

WATER PLANT
SCADA PANEL
EXTERIOR LAYOUT

Gaines, Williams & Associates, Inc.
Engineers
P.O. Box 38688
Germantown, Tennessee 38183-0688
Voice: 901-756-9065
Fax: 901-756-9066
www.gaineswilliams.com

CN1.2

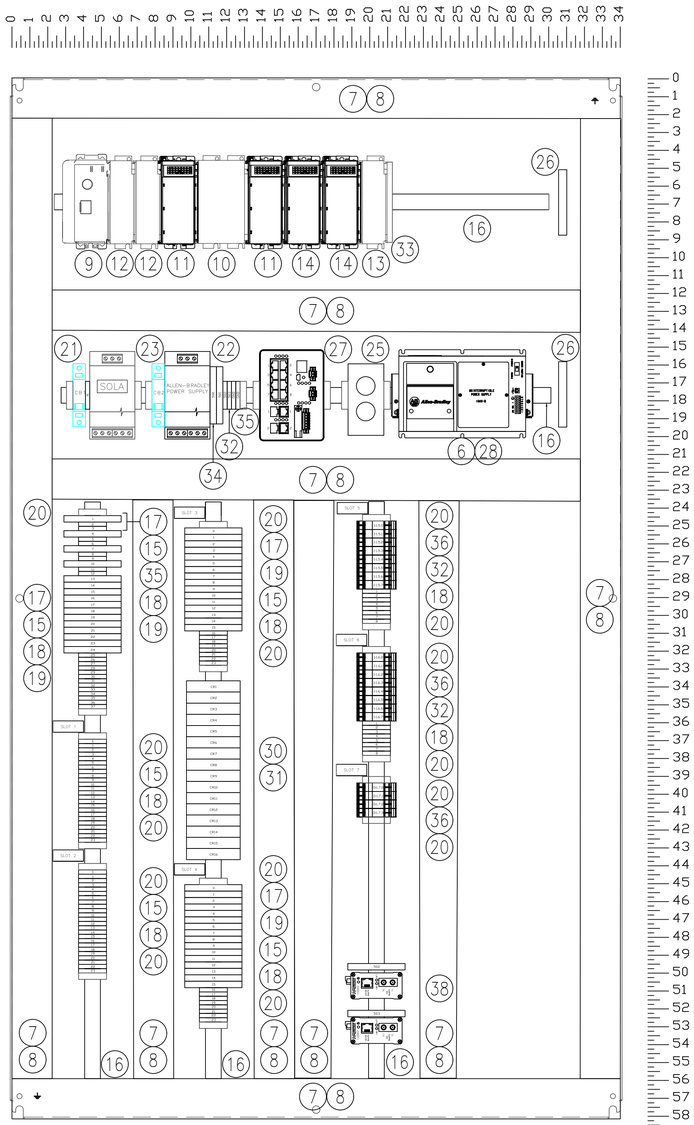

PLANT CONTROL PANEL
INTERIOR DETAIL

ALAMO WATER PLANT CONTROL PANEL BILL OF MATERIALS (TYPICAL 1 PANEL)

NO.	QTY.	DESCRIPTION	PART NO.	COMMENTS
1	1	HOFFMAN CONCEPT STEEL NEMA 12 ENCLOSURE, 60x36x12	CSD603612	OR APPROVED EQUAL
2	1	HOFFMAN SUBPANEL	CP6036	OR APPROVED EQUAL
3	1	HOFFMAN LED LIGHTING PACKAGE W/ SWITCH	LEDA1S35	OR APPROVED EQUAL
4	1	HOFFMAN 4" COOLING FAN PACKAGE	TFP41	OR APPROVED EQUAL
5	1	HOFFMAN 4" EXHAUST GRILLE	TEP4	OR APPROVED EQUAL
6	1	ALLEN-BRADLEY, UPS, 600VA, 120 VAC	1609-B600N	OR APPROVED EQUAL
7	30	PANDUIT, 2"X4" WHITE WIREWAY	F2X4WH6	OR APPROVED EQUAL
8	30	PANDUIT, 2" WIRE DUCT COVER	C2WH6	OR APPROVED EQUAL
9	1	ALLEN-BRADLEY, COMPACTLOGIX PROCESSOR	1769-L33ER	OR APPROVED EQUAL
10	1	ALLEN-BRADLEY, COMPACTLOGIX POWER SUPPLY	1769-PA4	OR APPROVED EQUAL
11	2	ALLEN-BRADLEY, COMPACTLOGIX DISCRETE OUTPUT, 120VAC, 16 POINT	1769-OW16	OR APPROVED EQUAL
12	2	ALLEN-BRADLEY, COMPACTLOGIX DISCRETE INPUT, 120VAC, 16 POINT	1756-IA16	OR APPROVED EQUAL
13	1	ALLEN-BRADLEY, COMPACTLOGIX ANALOG OUTPUT, 4-20mA, 4 CHANNEL	1769-OF4CI	OR APPROVED EQUAL
14	2	ALLEN-BRADLEY, COMPACTLOGIX ANALOG INPUT, 4-20mA, 8 CHANNEL	1769-IF8	OR APPROVED EQUAL
15	80	ALLEN-BRADLEY, TERMINALS, GRAY	1492-J4	OR APPROVED EQUAL
16	5	ALLEN-BRADLEY, SYMETRICAL STEEL DIN RAIL	199-DR1	OR APPROVED EQUAL
17	48	ALLEN-BRADLEY, FUSED TERMINAL BLOCK, 100-300VAC, NEON INDICATOR	1492-H4	OR APPROVED EQUAL
18	30	ALLEN-BRADLEY, TERMINAL END BARRIER	1492-EBJ3	OR APPROVED EQUAL
19	24	ALLEN-BRADLEY, FUSED TERMINAL END BARRIER	1492-N37	OR APPROVED EQUAL
20	40	ALLEN-BRADLEY, HEAVY DUTY TERMINAL END ANCHOR	1492-EAHJ35	OR APPROVED EQUAL
21	2	ALLEN-BRADLEY, CIRCUIT BREAKER, 15 AMP, SINGLE POLE	1492-SP1C150	OR APPROVED EQUAL
22	1	ALLEN-BRADLEY, POWER SUPPLY, 120VAC INPUT, 24 VDC OUTPUT, 10.0 AMPS	1606-XLS240EA	OR APPROVED EQUAL
23	1	SOLA, SURGE SUPPRESSOR	STV25K-10S	OR APPROVED EQUAL
24	40	GOULD, 5 AMP 120 VAC GLASS FUSE	GGC5	OR APPROVED EQUAL
25	1	ALLEN-BRALEY, DIN RAIL MOUNT DUPLEX RECEPTACLE, 15 AMP	1492-REC15	OR APPROVED EQUAL
26	2	SIEMENS GROUND BAR	GB10	OR APPROVED EQUAL
27	1	ALLEN-BRADLEY, STRATIX 5700, 10 PORT, MANAGED SWITCH	1783-BMS10CL	OR APPROVED EQUAL
28	2	ALLEN-BRADLEY, UPS BATTERY	1690-HBAT	OR APPROVED EQUAL
29				OR APPROVED EQUAL
30	16	ALLEN-BRADLEY, RELAY, DPDT, 120 VAC	700-HK32A1	OR APPROVED EQUAL
31	16	ALLEN-BRADLEY, RELAY BASE	700-HN122	OR APPROVED EQUAL
32	20	ALLEN-BRADLEY, TERMINALS, BLUE	1492-J4-B	OR APPROVED EQUAL
33	1	ALLEN-BRADLEY COMPACTLOGIX RIGHT END CAP	1769-ECR	OR APPROVED EQUAL
34	4	ALLEN-BRADLEY FUSED TERMINAL BLOCK, 10-57VAC/DC, RED LED INDICATOR	1492-H5	OR APPROVED EQUAL
35	6	ALLEN-BRADLEY GROUND TERMINAL	1492-JG3	OR APPROVED EQUAL
36	20	ALLEN-BRADLEY ANALOG SURGE SUPPRESSOR	4983-DD24	OR APPROVED EQUAL
37	4	KELLY CURRENT TRANSDUCERS, SPLIT CORE, 4-20 OUTPUT, 0-50/100/150 A, SHIPPED LOOSE INSTALLED IN MCC BUCKETS	SCX420150	OR APPROVED EQUAL
38	2	N-TRON FIBER TO COPPER MEDIA CONVERTER, RJ45 X ST MULTIMODE FIBER	102MC-ST	OR APPROVED EQUAL
39	2	CATEGORY 6 PATCH CORD, RJ45 X RJ45, 1 METER		
40	2	CATEGORY 6 PATCH CORD, RJ45 X RJ45, 2 METER		

NOTES

1. ALL HARDWARE AND SOFTWARE SHALL BE PROPERTY OF THE OWNER AND LICENSED TO THE OWNER. NO PROPRIETARY CONTROLLERS OR CONTROLLERS THAT CAN ONLY BE PURCHASED FROM AND PROGRAMMED BY THE ORIGINAL SUPPLIER SHALL BE ACCEPTED. ALL HARDWARE SHALL BE OFF THE SHELF EQUIPMENT, NO EQUIPMENT THAT CAN ONLY BE PURCHASED FROM OR CONFIGURED BY THE ORIGINAL SUPPLIER SHALL BE ACCEPTED. ALL SOFTWARE, HUMAN MACHINE INTERFACE (HMI), DATABASE, HISTORICAL DATA COLLECTION, REPORT GENERATION, ALARM NOTIFICATION AND PROGRAMMABLE LOGIC CONTROLLER PROGRAMMING SHALL BE VIA OFF THE SHELF SOFTWARE. NO SOFTWARE SHALL BE ACCEPTED THAT CAN ONLY BE PURCHASED FROM AND PROGRAMMED BY THE ORIGINAL SUPPLIER.
2. IF HARDWARE OTHER THAT THOSE LISTED (APPROVED EQUALS) IS FURNISHED, THE CONTRACTOR SHALL PROVIDE PROGRAMMING AND CONFIGURATION SOFTWARE. ALL PROGRAMMABLE LOGIC CONTROLLERS AND REMOTE IO SHALL COMMUNICATE VIA ETHERNET IP.
3. IF PLC EQUIPMENT OTHER THAN THOSE LISTED (APPROVED EQUALS) IS FURNISHED THE CONTRACTOR SHALL PROVIDE CONTROL PANEL FABRICATION DRAWINGS AND WIRING DIAGRAMS, ORIGINAL EDITABLE BID DRAWINGS WILL NOT BE SUPPLIED. THE CONTRACTOR SHALL FURNISH DRAWINGS IN ELECTRONIC FORMAT IN AUTOCAD 2019.

NONE
WATER PLANT SCADA PANEL

Gaines, Williams & Associates, Inc.
Engineers
P.O. Box 38688
Germantown, Tennessee 38183-0688
Voice: 901-756-9065
Fax: 901-756-9066
www.gaineswilliams.com

A2H ENGINEERS ARCHITECTS PLANNERS
A2H, INC.
3009 DAVIES PLANTATION ROAD
LAKELAND, TN 38002
P. 901.372.0404
WWW.A2H.COM

TOWN OF ALAMO

2018 ALAMO WATER SYSTEM IMPROVEMENTS

ALAMO, TN

NOT FOR CONSTRUCTION

REVISIONS

PROJECT NO.	DATE
17410	FEBRUARY 5, 2019
DRAWN	CHECKED
RSG	RSG

WATER PLANT SCADA PANEL INTERIOR LAYOUT

CN1.3

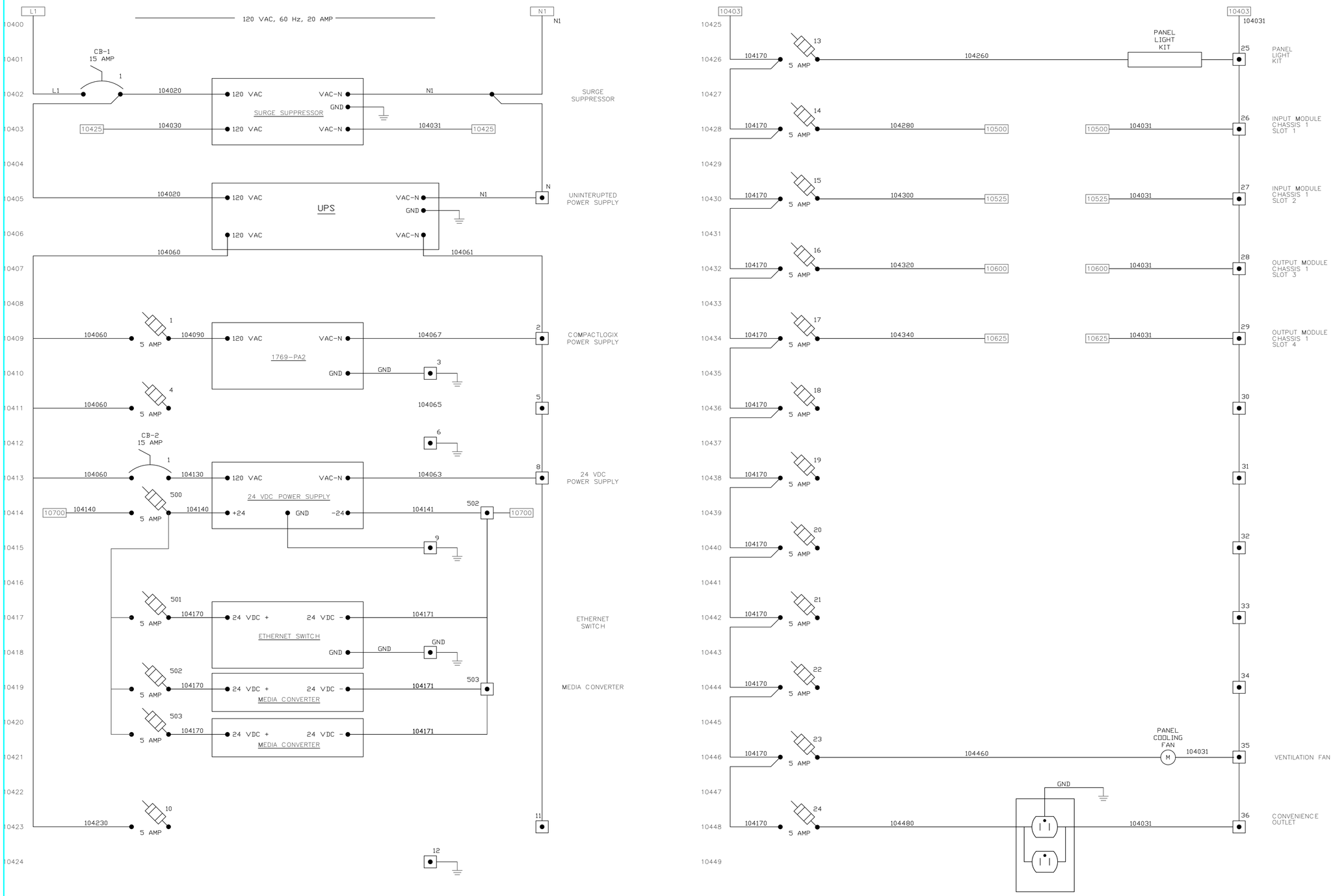

A2H, INC.
3009 DAVIES PLANTATION ROAD
LAKELAND, TN 38002
P. 901.372.0404
WWW.A2H.COM

TOWN OF ALAMO

2018 ALAMO WATER SYSTEM IMPROVEMENTS

ALAMO, TN

NOT FOR CONSTRUCTION

REVISIONS

PROJECT NO.	DATE
17410	FEBRUARY 5, 2019
DRAWN	CHECKED
RSG	RSG

WATER PLANT SCADA PANEL POWER WIRING

Gaines, Williams & Associates, Inc.
Engineers
P.O. Box 38688
Germantown, Tennessee 38183-0688
Voice: 901-756-9065
Fax: 901-756-9066
www.gaineswilliams.com

CN1.4

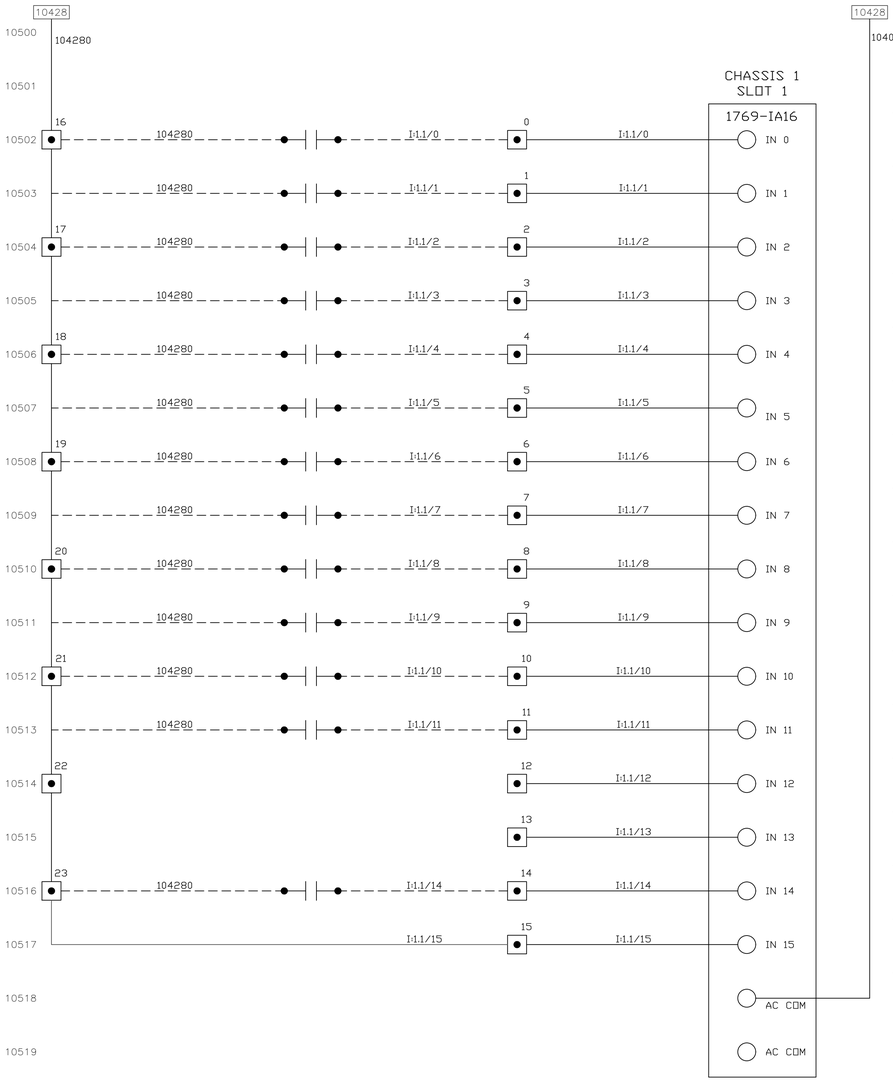

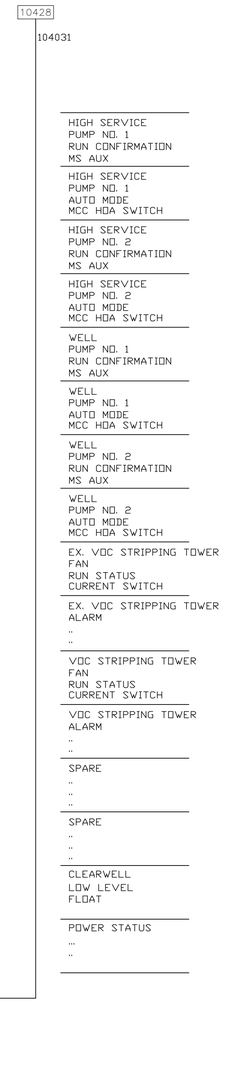

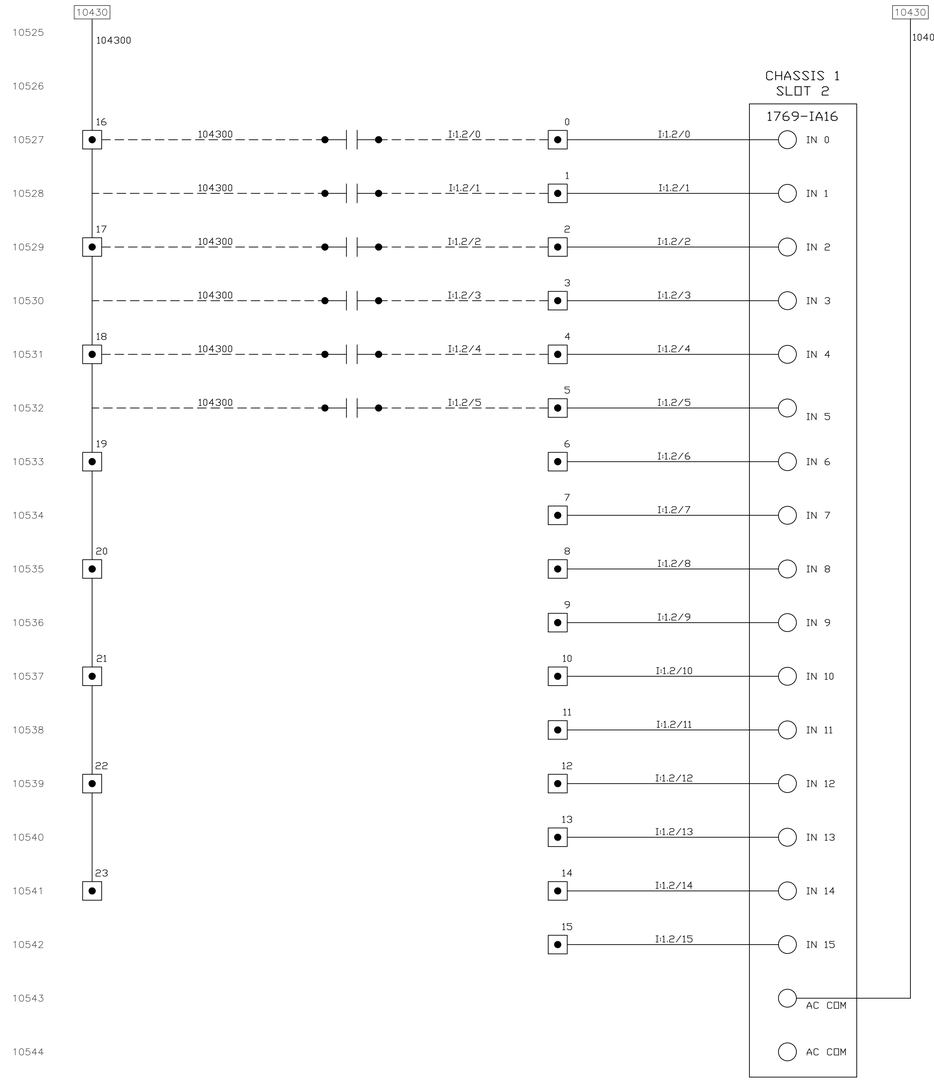

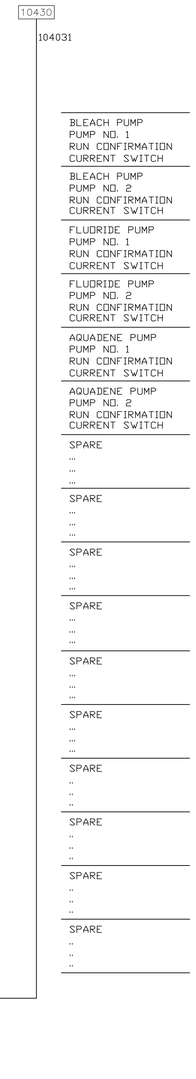

A2H ENGINEERS ARCHITECTS PLANNERS
A2H, INC.
3009 DAVIES PLANTATION ROAD
LAKELAND, TN 38002
P. 901.372.0404
WWW.A2H.COM

TOWN OF ALAMO

2018 ALAMO WATER SYSTEM IMPROVEMENTS

ALAMO, TN

NOT FOR CONSTRUCTION

REVISIONS

PROJECT NO.	DATE
17410	FEBRUARY 5, 2019
DRAWN	CHECKED
RSG	RSG

WATER PLANT SCADA PANEL SLOTS 1 & 2

GW & ASSOCIATES
Gaines, Williams & Associates, Inc.
Engineers
P.O. Box 38688
Germantown, Tennessee 38183-0688
Voice: 901-756-9065
Fax: 901-756-9066
www.gaineswilliams.com

CN1.5

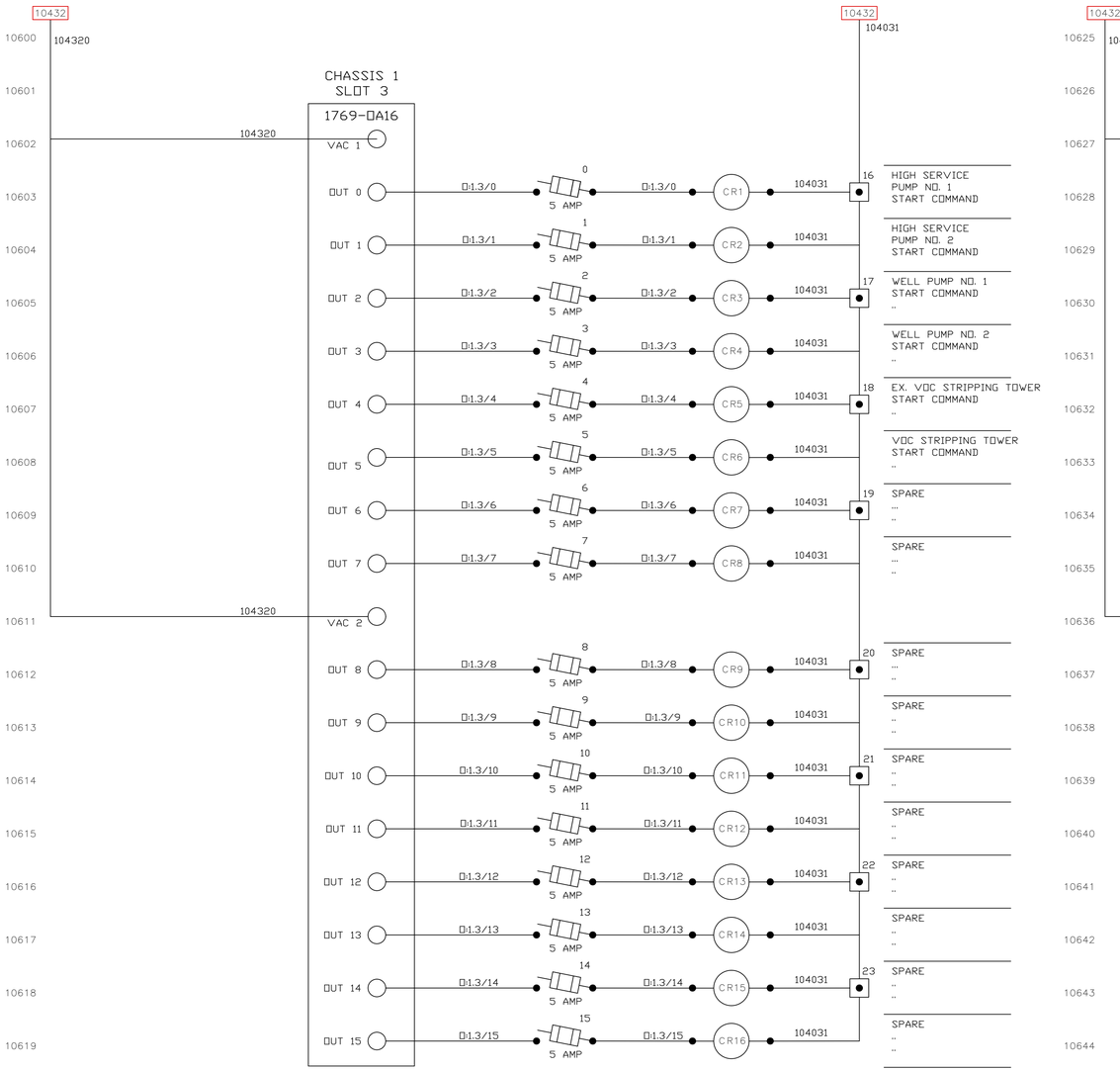

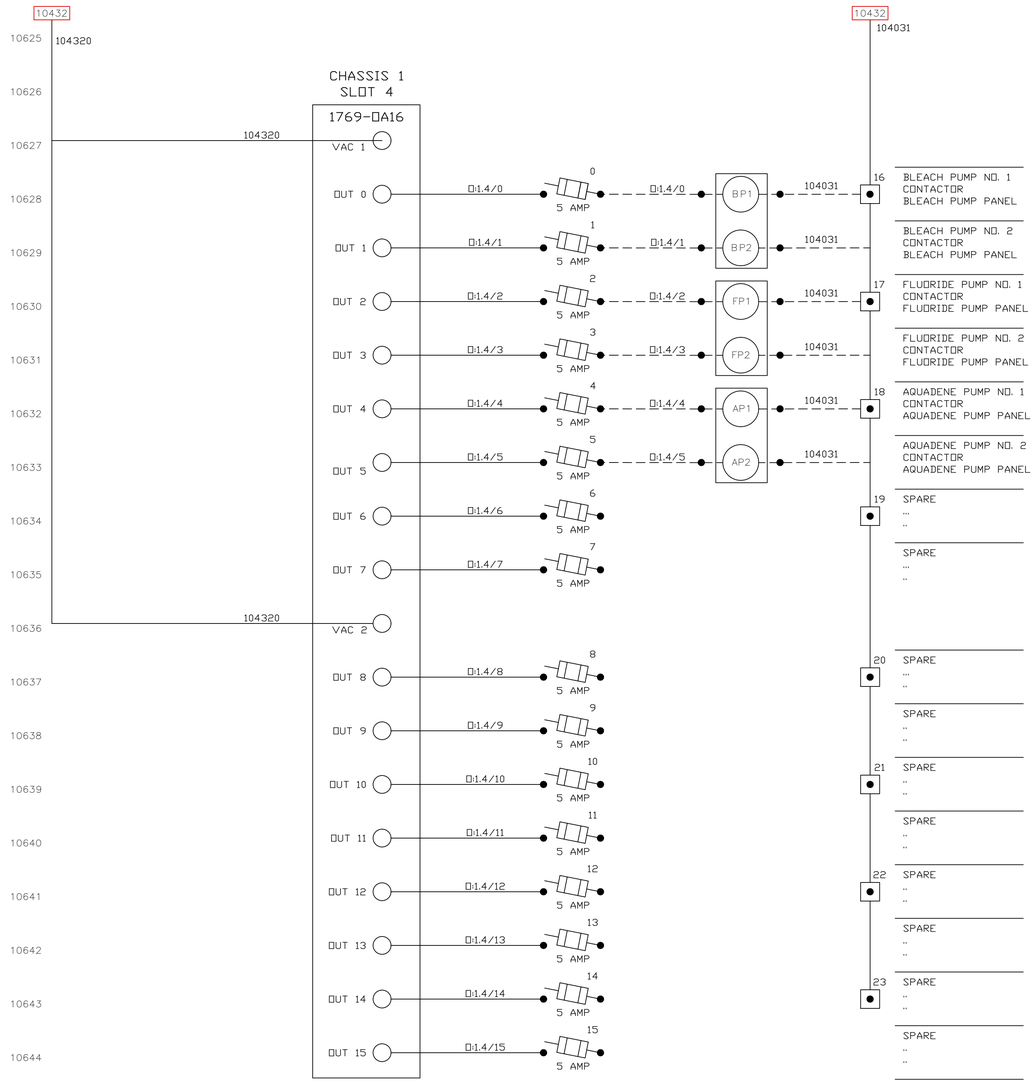

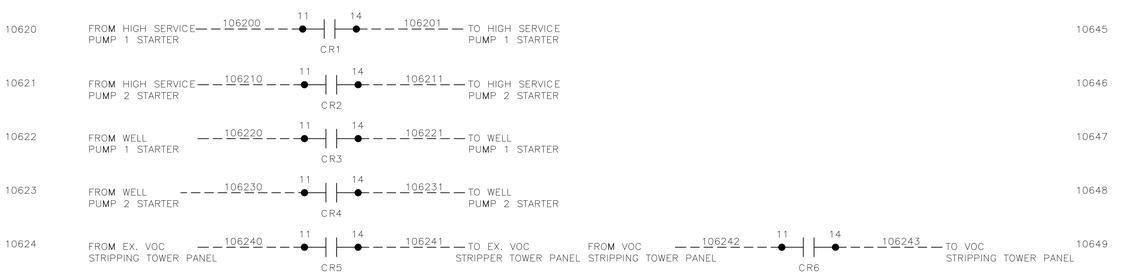

A2H ENGINEERS ARCHITECTS PLANNERS

A2H, INC.
3009 DAVIES PLANTATION ROAD
LAKELAND, TN 38002
P. 901.372.0404
WWW.A2H.COM

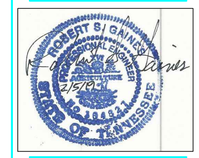

TOWN OF ALAMO

2018 ALAMO WATER SYSTEM IMPROVEMENTS

ALAMO, TN

NOT FOR CONSTRUCTION

REVISIONS

PROJECT NO.	DATE
17410	FEBRUARY 5, 2019
DRAWN	CHECKED
RSG	RSG

WATER PLANT SCADA PANEL SLOTS 3 & 4

Gaines, Williams & Associates, Inc.
Engineers
P.O. Box 38688
Germantown, Tennessee 38183-0688
Voice: 901-756-9065
Fax: 901-756-9066
www.gaineswilliams.com

CN1.6

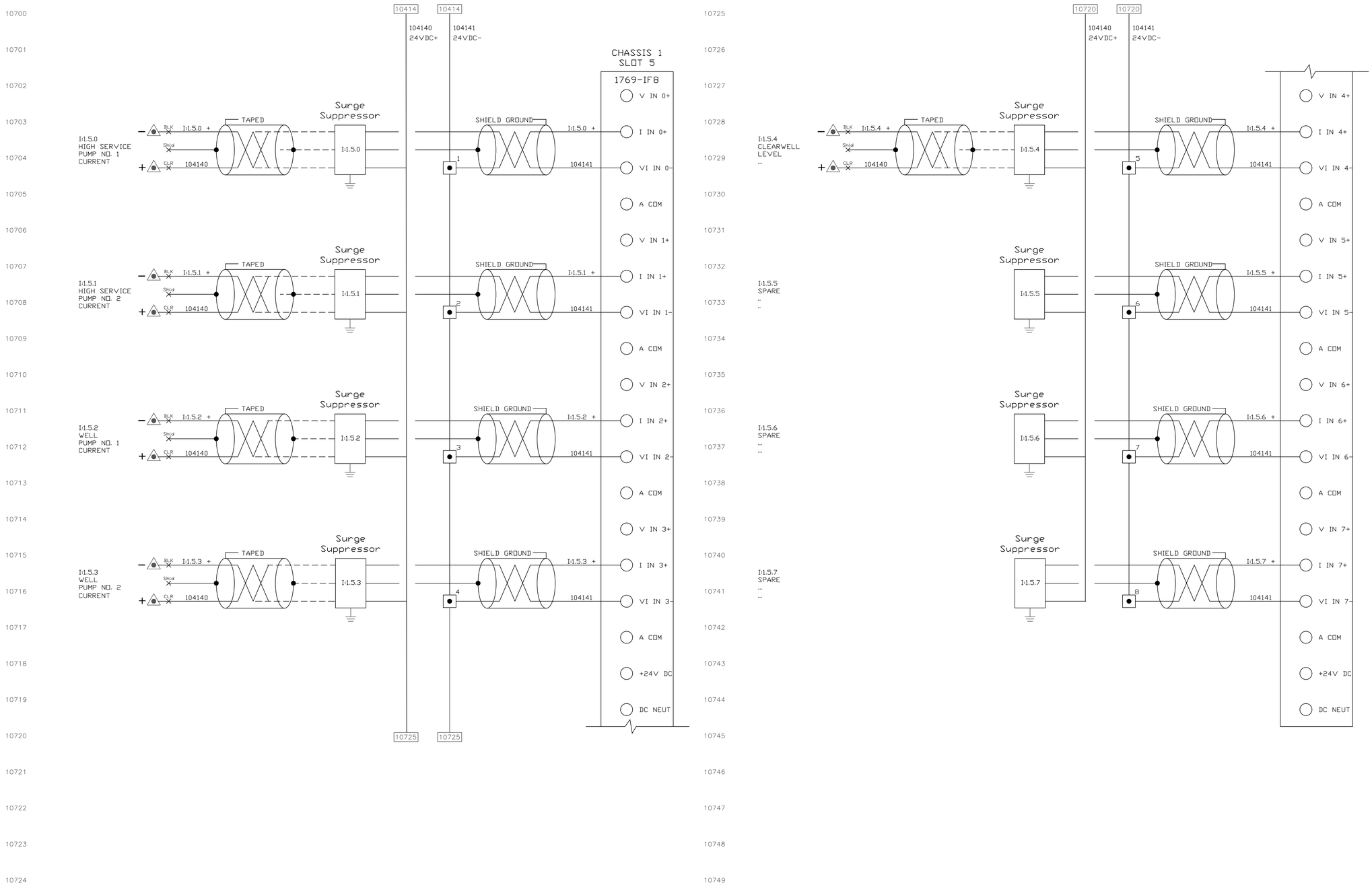

A2H, INC.
3009 DAVIES PLANTATION ROAD
LAKELAND, TN 38002
P. 901.372.0404
WWW.A2H.COM

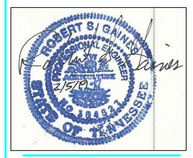

TOWN OF ALAMO

2018 ALAMO WATER SYSTEM IMPROVEMENTS

ALAMO, TN

NOT FOR CONSTRUCTION

REVISIONS

PROJECT NO.	DATE
17410	FEBRUARY 5, 2019
DRAWN	CHECKED
RSG	RSG

WATER PLANT SCADA PANEL SLOT 5

Gaines, Williams & Associates, Inc.
Engineers
P.O. Box 38688
Germantown, Tennessee 38183-0688
Voice: 901-756-9065
Fax: 901-756-9066
www.gaineswilliams.com

CN1.7

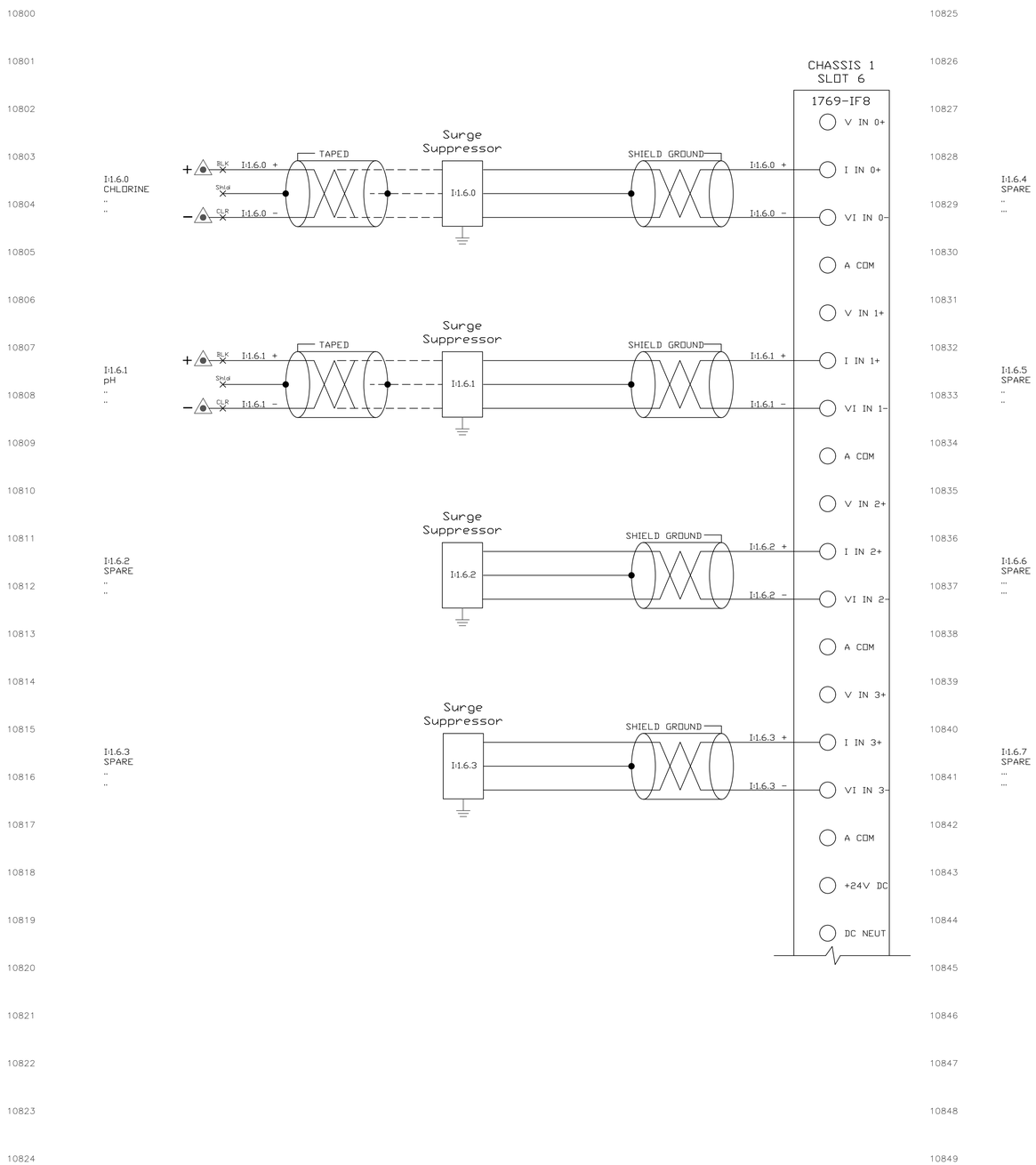

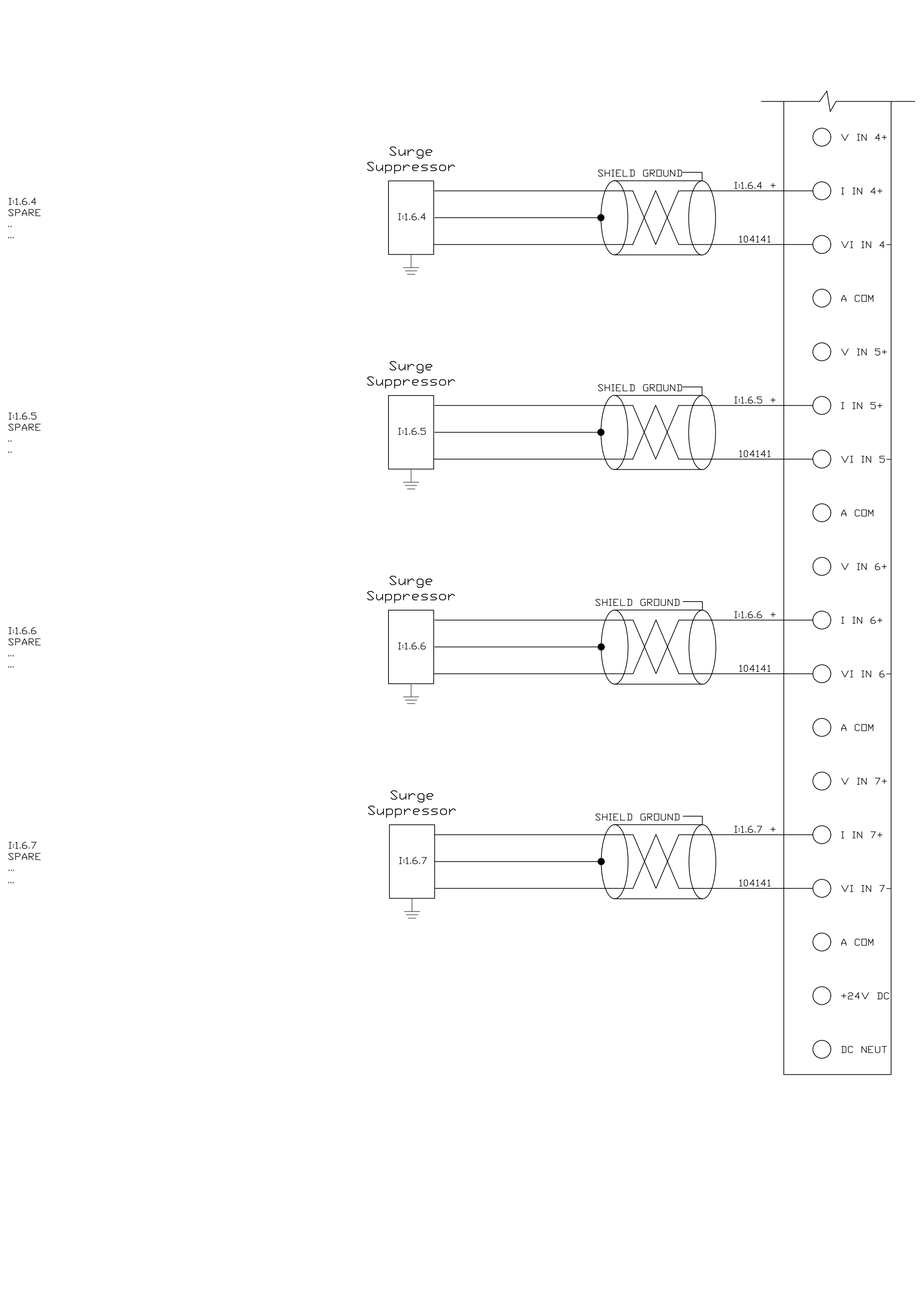

A2H, INC.
3009 DAVIES PLANTATION ROAD
LAKELAND, TN 38002
P. 901.372.0404
WWW.A2H.COM

TOWN OF ALAMO

2018 ALAMO WATER SYSTEM IMPROVEMENTS

ALAMO, TN

NOT FOR CONSTRUCTION

REVISIONS

PROJECT NO.	DATE
17410	FEBRUARY 5, 2019
DRAWN	CHECKED
RSG	RSG

WATER PLANT SCADA PANEL SLOT 6

Gaines, Williams & Associates, Inc.
Engineers
P.O. Box 38688
Germantown, Tennessee 38183-0688
Voice: 901-756-9065
Fax: 901-756-9066
www.gaineswilliams.com

CN1.8

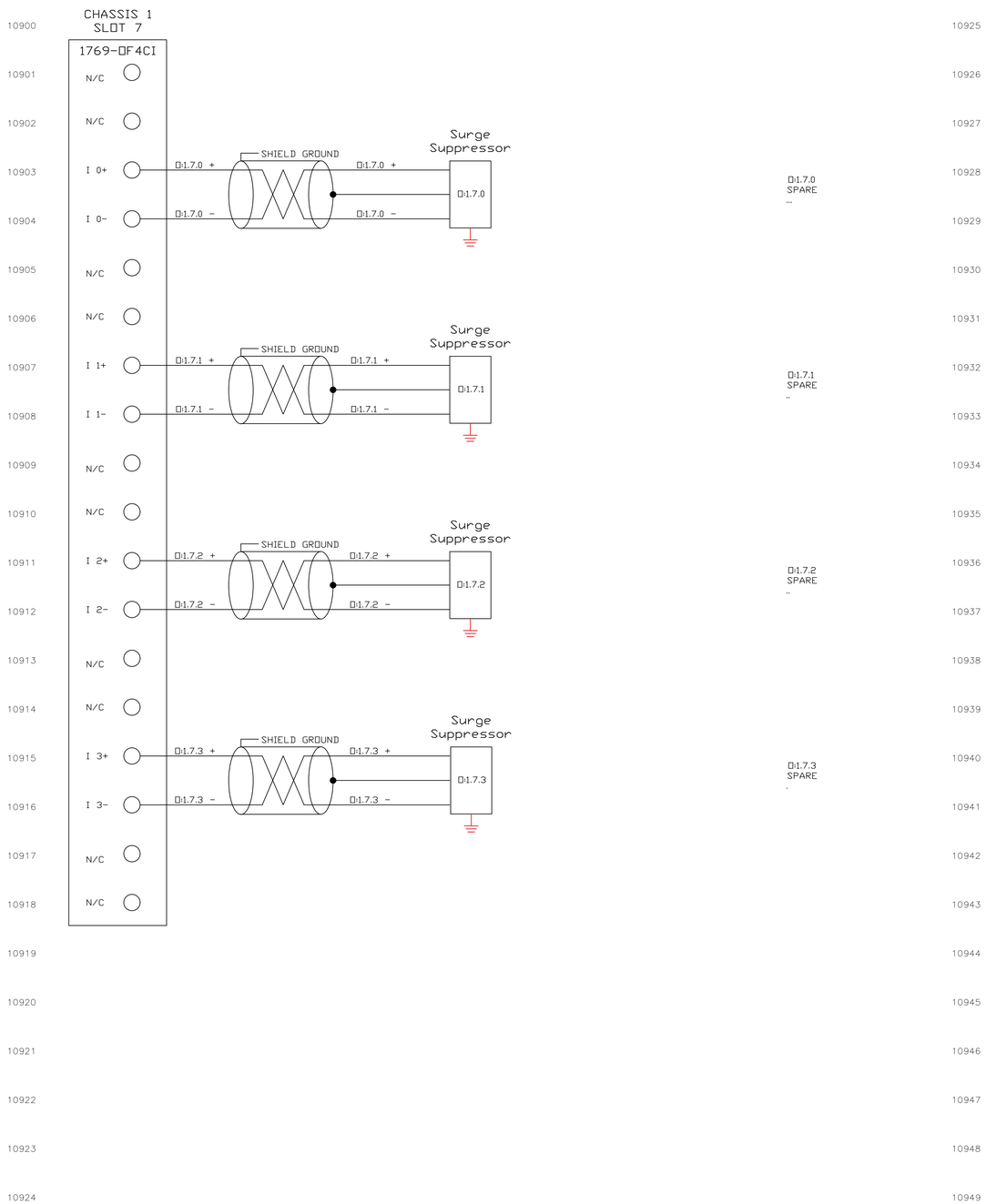

A2H, INC.
3009 DAVIES PLANTATION ROAD
LAKELAND, TN 38002
P. 901.372.0404
WWW.A2H.COM

TOWN OF ALAMO

2018 ALAMO
WATER SYSTEM
IMPROVEMENTS

ALAMO, TN

NOT FOR CONSTRUCTION

REVISIONS

PROJECT NO.	DATE
17410	FEBRUARY 5, 2019
DRAWN	CHECKED
RSG	RSG

WATER PLANT
SCADA PANEL
SLOT 7

Gaines, Williams & Associates, Inc.
Engineers
P.O. Box 38688
Germantown, Tennessee 38183-0688
Voice: 901-756-9065
Fax: 901-756-9066
www.gaineswilliams.com

CN1.9

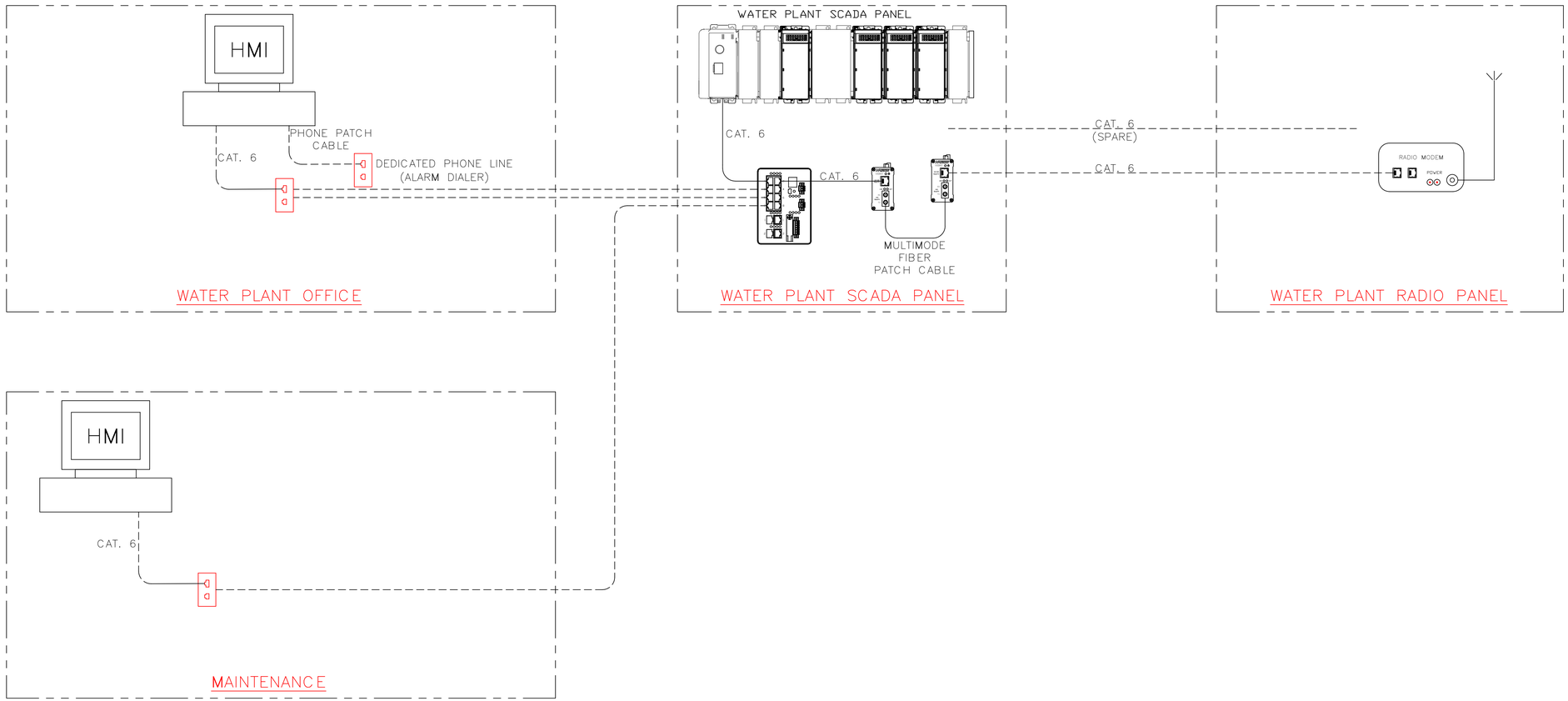

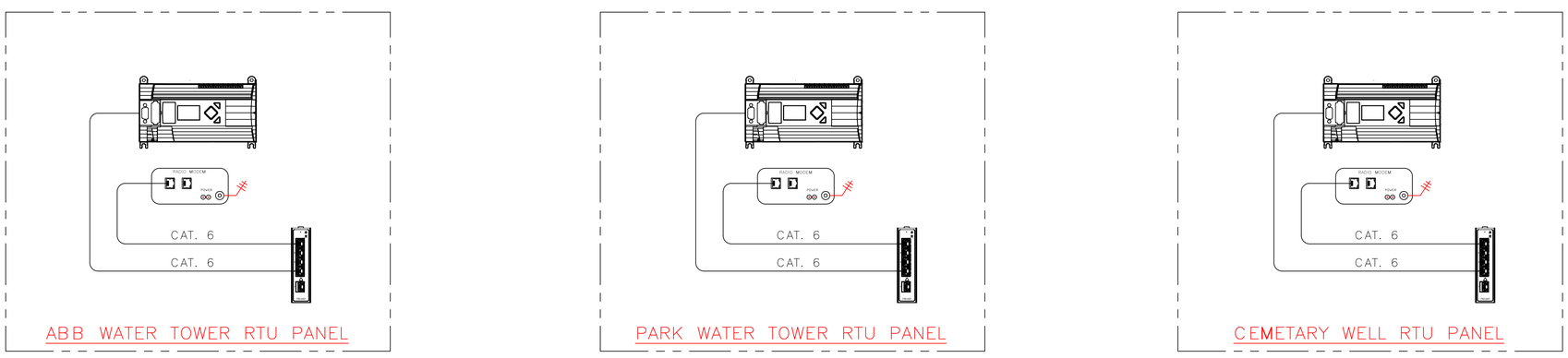

NONE

WATER SCADA NETWORK DIAGRAM

A2H ENGINEERS ARCHITECTS PLANNERS

A2H, INC.
3009 DAVIES PLANTATION ROAD
LAKELAND, TN 38002
P. 901.372.0404
WWW.A2H.COM

TOWN OF ALAMO

2018 ALAMO WATER SYSTEM IMPROVEMENTS

ALAMO, TN

NOT FOR CONSTRUCTION

REVISIONS

PROJECT NO.	DATE
17410	FEBRUARY 5, 2019
DRAWN	CHECKED
RSG	RSG

WATER SCADA NETWORK DIAGRAM

Gaines, Williams & Associates, Inc.
Engineers
P.O. Box 38688
Germantown, Tennessee 38183-0688
Voice: 901-756-9065
Fax: 901-756-9066
www.gaineswilliams.com

CN1.10

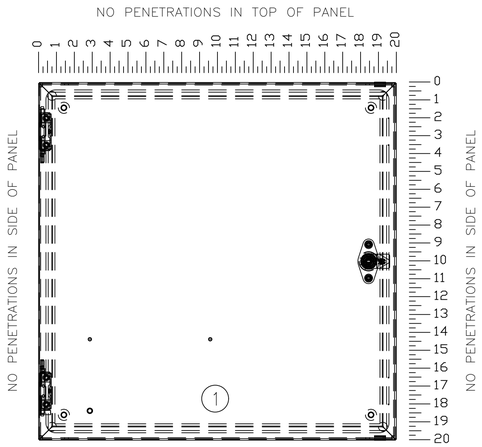

PLANT RADIO PANEL EXTERIOR DETAIL

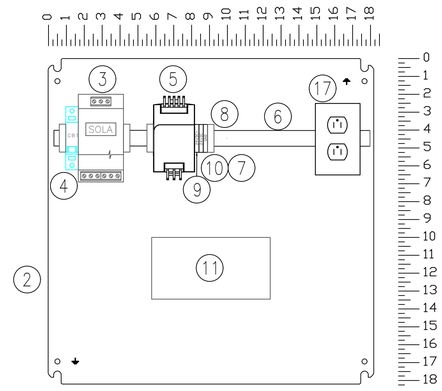

PLANT RADIO PANEL INTERIOR DETAIL

ALAMO WATER PLANT RADIO PANEL				
ITEM	QTY	DESCRIPTION	PART NO.	COMMENTS
1	1	HOFFMAN CONCEPT NEMA 4 ENCLOSURE, 20X20X12	CSD202012LG	OR APPOVED EQUAL
2	1	HOFFMAN CONCEPT PANEL	CP2020	OR APPOVED EQUAL
3	1	SOLA, SURGE SUPPRESSOR	STV25K-10S	OR APPOVED EQUAL
4	1	ALLEN-BRADLEY, CIRCUIT BREAKER, 15 AMP, SINGLE POLE	1492SP1C150	OR APPOVED EQUAL
5	1	ALLEN-BRADLEY POWER SUPPLY, 120VAC INPUT, 24VDC OUTPUT, 1.3 AMPS	1606-XLP30E	OR APPOVED EQUAL
6	1	ALLEN-BRADLEY, SYMETRICAL STEEL DIN RAIL	199-DR1	OR APPOVED EQUAL
7	1	ALLEN-BRADLEY, TERMINAL END BARRIER	1492-EBJ3	OR APPOVED EQUAL
8	4	ALLEN-BRADLEY, HEAVY DUTY TERMINAL END ANCHOR	1492-EAHJ35	OR APPOVED EQUAL
9	2	ALLEN-BRADLEY, TERMINALS, BLUE	1492-J4-B	OR APPOVED EQUAL
10	1	ALLEN-BRADLEY GROUND TERMINAL	1492-JG3	OR APPOVED EQUAL
11	1	CAMBIUM NETWORKS N500 SERIES, 900MHz (902-928) SPREAD SPECTRUM, ETHERNET INTERFACE WITH CONFIGURATION SOFTWARE		OR APPOVED EQUAL
12	1	LIGHNING ARRESTOR		OR APPOVED EQUAL
13	1	ANTENNA PATCH CABLE TO CONNECT RADIO MODEM TO LIGHTNING ARRESTOR		OR APPOVED EQUAL
14	AS REQ	ANTENNA CABLE AS RECOMMENDED BY THE RADIOMANUFACTURER FOR LENGTH REQUIRED. CABLE SHALL BE ONE CONTINUOUS CABLE WITH NO SPLICES.		OR APPOVED EQUAL
15	1	OMNI DIRECTIONAL ANTENNA WITH GAIN AS DETERMINED BY SITE SURVEY		OR APPOVED EQUAL
16	1	APC UNINTERRUPTABLE POWER SUPPLY 550 WATTS		OR APPOVED EQUAL
17	1	ALLEN-BRALEY, DIN RAIL MOUNT DUPLEX RECEPTACLE, 15 AMP	1492-REC15	OR APPOVED EQUAL
18	AS REQ	CATEGORY 6 ETHERNET CABLE OF LENGTH REQUIRED TO CONNECT IN MAIN SCADA PANEL, SEE SHEET CON1.1		
19				
20				

NOTES

1. ALL HARDWARE AND SOFTWARE SHALL BE PROPERTY OF THE OWNER AND LICENSED TO THE OWNER. NO PROPRIETARY CONTROLLERS OR CONTROLLERS THAT CAN ONLY BE PURCHASED FROM AND PROGRAMMED BY THE ORIGINAL SUPPLIER SHALL BE ACCEPTED. ALL HARDWARE SHALL BE OFF THE SHELF EQUIPMENT, NO EQUIPMENT THAT CAN ONLY BE PURCHASED FROM OR CONFIGURED BY THE ORIGINAL SUPPLIER SHALL BE ACCEPTED. ALL SOFTWARE, HUMAN MACHINE INTERFACE (HMI), DATABASE, HISTORICAL DATA COLLECTION, REPORT GENERATION, ALARM NOTIFICATION AND PROGRAMMABLE LOGIC CONTROLLER PROGRAMMING SHALL BE VIA OFF THE SHELF SOFTWARE. NO SOFTWARE SHALL BE ACCEPTED THAT CAN ONLY BE PURCHASED FROM AND PROGRAMMED BY THE ORIGINAL SUPPLIER.
2. IF HARDWARE OTHER THAT THOSE LISTED (APPROVED EQUALS) IS FURNISHED, THE CONTRACTOR SHALL PROVIDE PROGRAMMING AND CONFIGURATION SOFTWARE. ALL PROGRAMMABLE LOGIC CONTROLLERS AND REMOTE IO SHALL COMMUNICATE VIA ETHERNET IP.
3. IF PLC EQUIPMENT OTHER THAN THOSE LISTED (APPROVED EQUALS) IS FURNISHED THE CONTRACTOR SHALL PROVIDE CONTROL PANEL FABRICATION DRAWINGS AND WIRING DIAGRAMS, ORIGINAL EDITABLE BID DRAWINGS WILL NOT BE SUPPLIED. THE CONTRACTOR SHALL FURNISH DRAWINGS IN ELECTRONIC FORMAT IN AUTOCAD 2019.

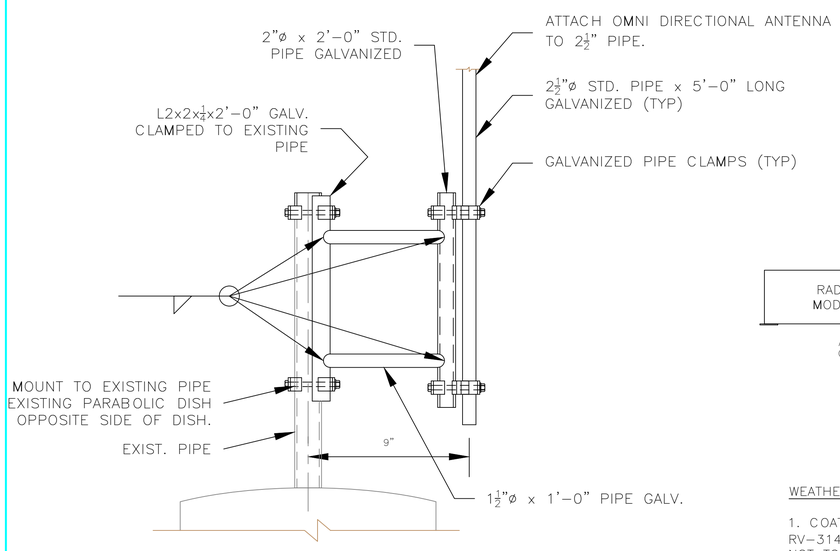

ANTENNA DETAIL FOR WATER TOWER

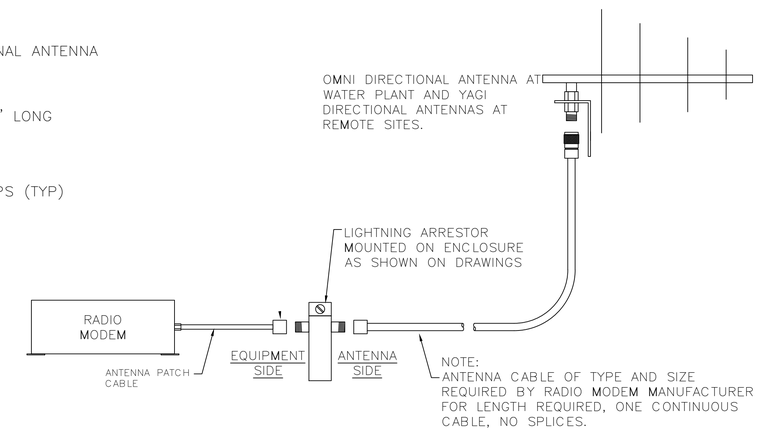

ANTENNA COAXIAL CABLE SYSTEM

WEATHER PROOFING EXTERIOR COAX CONNECTORS NOTES:

1. COAT THE THREADS OF THE CONNECTORS WITH SILICONE LUBRICANT (DOW CORNING RV-3140 OR EQUIVALENT) PRIOR TO ASSEMBLY AND HAND TIGHTEN. CARE SHOULD BE TAKEN NOT TO GET ANY LUBRICANT ON THE CENTER CONDUCTOR.

2. WRAP THE CONNECTOR ASSEMBLY WITH A VAPOR BARRIER PATCH FOR WEATHER PROOFING, ENSURING TO OVERLAP ONTO THE COAX CABLE APPROXIMATELY 1 1/2 INCHES.

3. APPLY AN ELECTRICAL COATING (SUCH AS 3-M SCOTCHKOTE) OVER THE VAPOR BARRIER PATCH FOR ADDED PROTECTION.

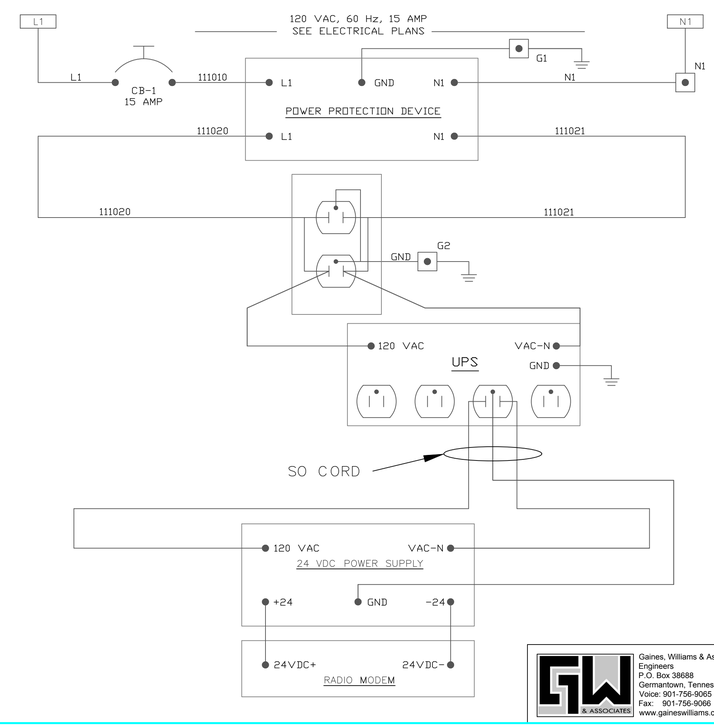

Gaines, Williams & Associates, Inc.
Engineers
P.O. Box 38688
Germantown, Tennessee 38183-0688
Voice: 901-756-9065
Fax: 901-756-9066
www.gaineswilliams.com

A2H ENGINEERS ARCHITECTS PLANNERS
A2H, INC.
3009 DAVIES PLANTATION ROAD
LAKELAND, TN 38002
P. 901.372.0404
WWW.A2H.COM

TOWN OF ALAMO

2018 ALAMO WATER SYSTEM IMPROVEMENTS

ALAMO, TN

NOT FOR CONSTRUCTION

REVISIONS

PROJECT NO.	DATE
17410	FEBRUARY 5, 2019
DRAWN	CHECKED
RSG	RSG

WATER PLANT SCADA RADIO PANEL

CN1.11

NONE

WATER PLANT RADIO PANEL

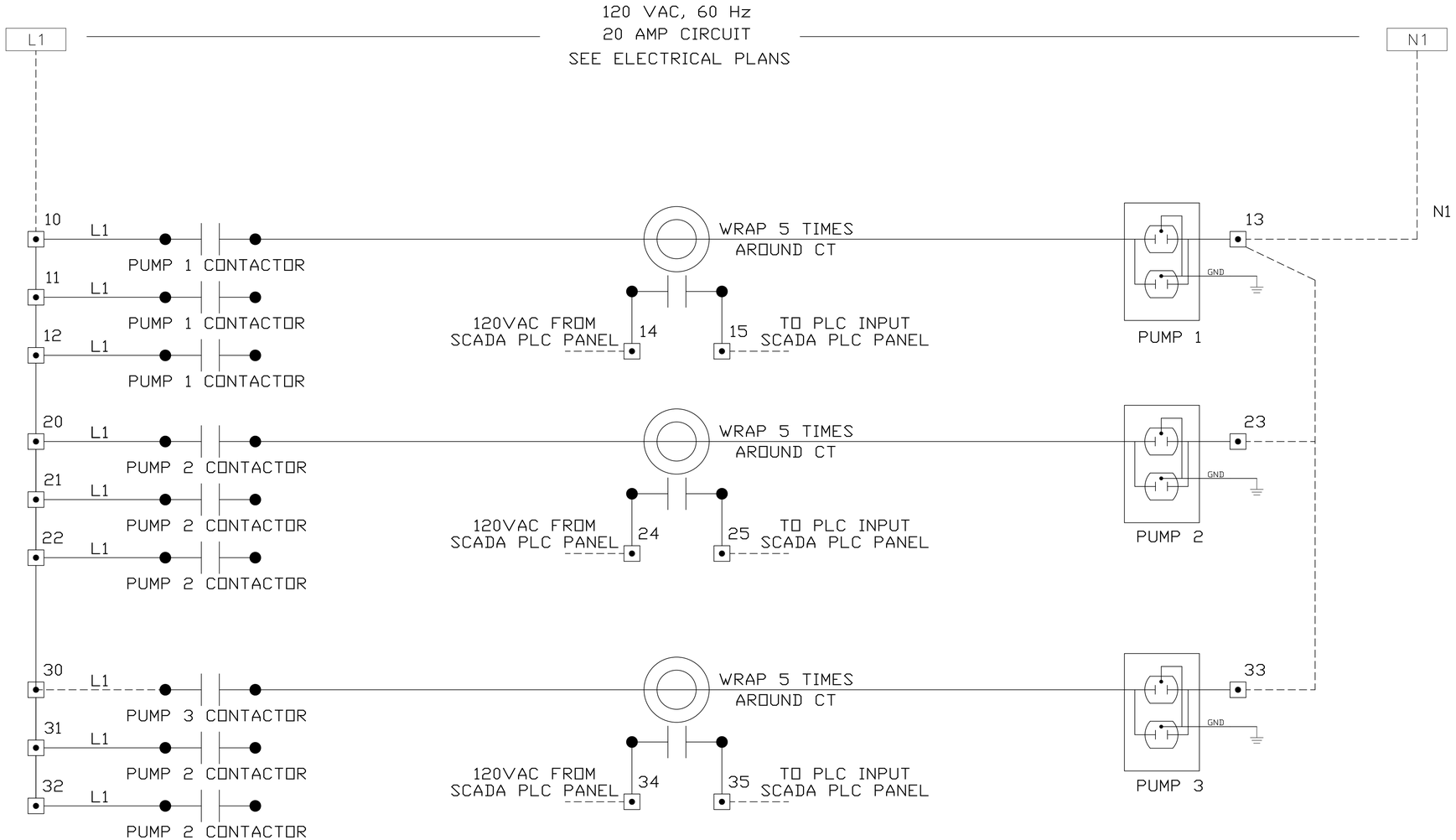

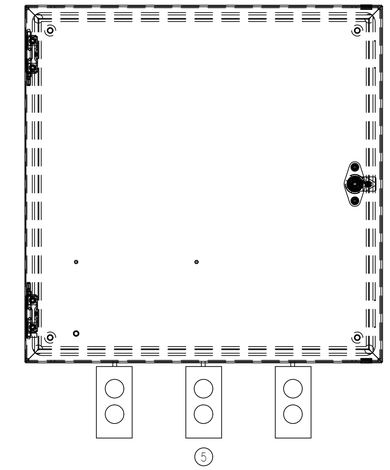

CHEMICAL PUMP CONTACTOR PANEL
EXTERIOR DETAIL
(TYPICAL 3)

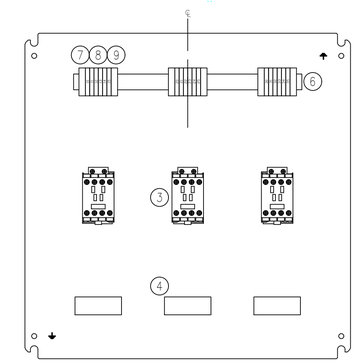

CHEMICAL PUMP CONTACTOR PANEL
INTERIOR DETAIL
(TYPICAL 3)

ALAMO WATER PLANT CHEMICAL PUMP BILL OF MATERIALS (TYPICAL 3 PANEL)

ITEM	QTY	DESCRIPTION	PART NO.	COMMENTS
1	1	HOFFMAN CONCEPT NEMA 12 ENCLOSURE, 20X20C32X8	CSD20208	OR APPROVED EQUAL
2	1	HOFFMAN CONCEPT PANEL	CP2020	OR APPROVED EQUAL
3	3	ALLEN-BRADLEY CONTACTOR	100-C09D10	OR APPROVED EQUAL
4	3	MAMAC SYSTEMS (KELLY) CURRENT SWITCHES, SPLIT CORE, RELAY OUTPUT, ADUSTABLE 1.0 - 200.0 A	CT-815	OR APPROVED EQUAL
5	3	DUPLEX RECEPTACLE WITH BOX AND COVER		OR APPROVED EQUAL
6	1	ALLEN-BRADLEY, SYMETRICAL STEEL DIN RAIL	199-DR1	OR APPROVED EQUAL
7	18	ALLEN-BRADLEY, TERMINALS, GRAY	1492-J4	OR APPROVED EQUAL
8	3	ALLEN-BRADLEY, TERMINAL END BARRIER	1492-EBJ3	OR APPROVED EQUAL
9	6	ALLEN-BRADLEY, HEAVY DUTY TERMINAL END ANCHOR	1492-EAHJ35	OR APPROVED EQUAL
10				

NOTES

1. ALL HARDWARE AND SOFTWARE SHALL BE PROPERTY OF THE OWNER AND LICENSED TO THE OWNER. NO PROPRIETARY CONTROLLERS OR CONTROLLERS THAT CAN ONLY BE PURCHASED FROM AND PROGRAMMED BY THE ORIGINAL SUPPLIER SHALL BE ACCEPTED. ALL HARDWARE SHALL BE OFF THE SHELF EQUIPMENT, NO EQUIPMENT THAT CAN ONLY BE PURCHASED FROM OR CONFIGURED BY THE ORIGINAL SUPPLIER SHALL BE ACCEPTED. ALL SOFTWARE, HUMAN MACHINE INTERFACE (HMI), DATABASE, HISTORICAL DATA COLLECTION, REPORT GENERATION, ALARM NOTIFICATION AND PROGRAMMABLE LOGIC CONTROLLER PROGRAMMING SHALL BE VIA OFF THE SHELF SOFTWARE. NO SOFTWARE SHALL BE ACCEPTED THAT CAN ONLY BE PURCHASED FROM AND PROGRAMMED BY THE ORIGINAL SUPPLIER.
2. IF HARDWARE OTHER THAT THOSE LISTED (APPROVED EQUALS) IS FURNISHED, THE CONTRACTOR SHALL PROVIDE PROGRAMMING AND CONFIGURATION SOFTWARE. ALL PROGRAMMABLE LOGIC CONTROLLERS AND REMOTE IO SHALL COMMUNICATE VIA ETHERNET IP.
3. IF PLC EQUIPMENT OTHER THAN THOSE LISTED (APPROVED EQUALS) IS FURNISHED THE CONTRACTOR SHALL PROVIDE CONTROL PANEL FABRICATION DRAWINGS AND WIRING DIAGRAMS, ORIGINAL EDITABLE BID DRAWINGS WILL NOT BE SUPPLIED. THE CONTRACTOR SHALL FURNISH DRAWINGS IN ELECTRONIC FORMAT IN AUTOCAD 2019.

NONE | CHEMICAL PUMP CONTACTOR PANEL

A2H ENGINEERS ARCHITECTS PLANNERS
A2H, INC.
3009 DAVIES PLANTATION ROAD
LAKELAND, TN 38002
P. 901.372.0404
WWW.A2H.COM

TOWN OF ALAMO

2018 ALAMO WATER SYSTEM IMPROVEMENTS

ALAMO, TN

NOT FOR CONSTRUCTION

REVISIONS

PROJECT NO.	DATE
17410	FEBRUARY 5, 2019
DRAWN	CHECKED
RSG	RSG

CHEMICAL PUMP CONTACTOR PANEL

Gaines, Williams & Associates, Inc.
Engineers
P.O. Box 38688
Germantown, Tennessee 38183-0688
Voice: 901-756-9065
Fax: 901-756-9066
www.gaineswilliams.com

CN1.12

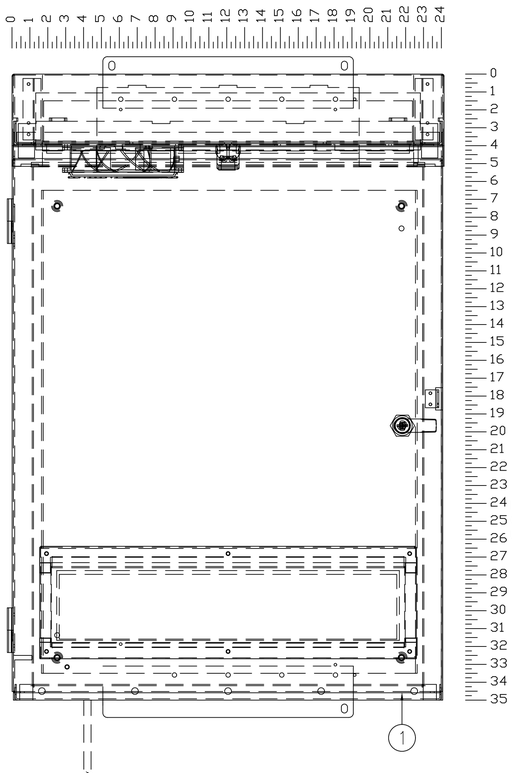

NOTE:
ANTENNA CABLE OF TYPE AND SIZE REQUIRED BY RADIO MODEM MANUFACTURER FOR LENGTH REQUIRED, ONE CONTINUOUS CABLE, NO SPLICES.

RTU CONTROL PANEL
EXTERIOR DETAIL
(TYPICAL 3)

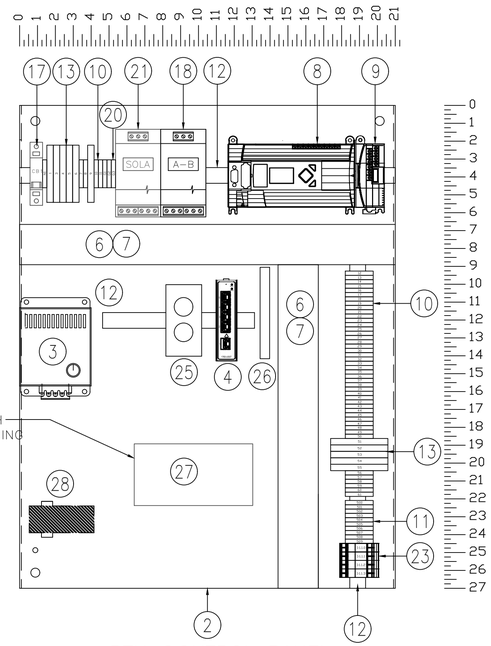

RTU CONTROL PANEL
INTERIOR DETAIL
(TYPICAL 3)

NOTES:
1. CONTRACTOR SHALL FURNISH AND INSTALL ONE (1) RTU PANEL AT TANK #2 (ABB TANK), TANK #1 (BALLPARK TANK) AND WELL #4 (CEMETARY WELL PUMP).
2. CONTRACTOR SHALL FURNISH AND INSTALL YAGI DIRECTIONAL ANTENNA ON TOP OF TANK #1.
3. CONTRACTOR SHALL FURNISH AND INSTALL YAGI DIRECTIONAL ANTENNA ON TOP OF TANK #2.
4. CONTRACTOR SHALL FURNISH AND INSTALL YAGI DIRECTIONAL ANTENNA AT HEIGHT REQUIRED BY SITE SURVEY ON CONTRACTOR FURNISHED AND INSTALL MOUNTING STRUCTURE AT WELL #4.

RTU CONTROL PANEL BILL OF MATERIALS

NO.	QTY.	DESCRIPTION	PART NO.	COMMENTS
1	1	HOFFMAN WEATHERFLO TYPE 3R VENTED ENCLOSURE W/FAN, 35"X24"X12"	WF10LP	OR APPROVED EQUAL
2	1	HOFFMAN SUBPANEL	A30P24	OR APPROVED EQUAL
3	1	HOFFMAN ELECTRIC HEATER - 200 WATT, 115 VAC	D-AH2001A	OR APPROVED EQUAL
4	1	ALLEN-BRADLEY ETHERNET SWITCH STRATIX 2000, 5 PORT	1783-US5T	OR APPROVED EQUAL
5	2	PATCH CORD, 3', RJ45M TO RJ45M, CATEGORY 6		
6	6	PANDUIT, 2"X4" WHITE WIREWAY	F2X4WH6	OR APPROVED EQUAL
7	6	PANDUIT, 2" WIRE DUCT COVER	C2WH6	OR APPROVED EQUAL
8	1	ALLEN-BRADLEY, MICROLOGIX 1400 PROCESSOR	1766-L32AWA	OR APPROVED EQUAL
9	1	ALLEN-BRADLEY, MICORLOGIX ANALOG INPUT, 4 CHANNEL, CURRENT	1762-IF4	OR APPROVED EQUAL
10	50	ALLEN-BRADLEY, TERMINALS, GRAY	1492-J4	OR APPROVED EQUAL
11	10	ALLEN-BRADLEY, TERMINALS, BLUE (FOR 24 VDC)	1492-J4B	OR APPROVED EQUAL
12	2	ALLEN-BRADLEY, SYMETRICAL STEEL DIN RAIL	199-DR1	OR APPROVED EQUAL
13	12	ALLEN-BRADLEY, FUSED TERMINAL BLOCK WITH NEON BLOWN FUSE INDICATOR	1492-H4	OR APPROVED EQUAL
14	2	ALLEN-BRADLEY, TERMINAL END BARRIER	1492-EBJ3	OR APPROVED EQUAL
15	2	ALLEN-BRADLEY, FUSED TERMINAL END BARRIER	1492-N37	OR APPROVED EQUAL
16	10	ALLEN-BRADLEY, HEAVY DUTY TERMINAL END ANCHOR	1492-EAHJ35	OR APPROVED EQUAL
17	1	ALLEN-BRADLEY, CIRCUIT BREAKER, 15 AMP, SINGLE POLE	1492SP1C150	OR APPROVED EQUAL
18	1	ALLEN-BRADLEY POWER SUPPLY, 2.5 AMP, 120VAC INPUT/24VDC OUTPUT	1606-XL60D	OR APPROVED EQUAL
19				
20	3	ALLEN-BRADLEY GROUND TERMINAL	1492-JG3	OR APPROVED EQUAL
21	1	SOLA, SURGE SUPPRESSOR	STV25K-10S	OR APPROVED EQUAL
22				
23	4	ALLEN-BRADLEY ANALOG SURGE SUPPRESSOR	4983-DD24	OR APPROVED EQUAL
24	10	GOULD, 5 AMP 120 VAC GLASS FUSE	GGC5	OR APPROVED EQUAL
25	1	ALLEN-BRADLEY, DIN RAIL MOUNT DUPLEX RECEPTACLE, 15 AMP	1492-REC15	OR APPROVED EQUAL
26	1	SIEMENS GROUND BAR	GB10	OR APPROVED EQUAL
27	1	CAMBIUM NETWORKS N500 SERIES, 900MHz (902-928) SPREAD SPECTRUM, ETHERNET INTERFACE WITH CONFIGURATION SOFTWARE		OR APPROVED EQUAL
28	1	LIGHNING ARRESTOR		OR APPROVED EQUAL
29	1	ANTENNA PATCH CABLE TO CONNECT RADIO MODEM TO LIGHTNING ARRESTOR		OR APPROVED EQUAL
30	AS REQ	ANTENNA CABLE AS RECOMMENDED BY THE RADIOMANUFACTURER FOR LENGTH REQUIRED. CABLE SHALL BE ONE CONTINUOUS CABLE WITH NO SPLICES.		OR APPROVED EQUAL
31	1	YAGI DIRECTIONAL ANTENNA WITH GAIN AS DETERMINED BY SITE SURVEY		OR APPROVED EQUAL
32	1	APC UNINTERRUPTABLE POWER SUPPLY 550 WATTS		OR APPROVED EQUAL
33				

NOTES

1. ALL HARDWARE AND SOFTWARE SHALL BE PROPERTY OF THE OWNER AND LICENSED TO THE OWNER. NO PROPRIETARY CONTROLLERS OR CONTROLLERS THAT CAN ONLY BE PURCHASED FROM AND PROGRAMMED BY THE ORIGINAL SUPPLIER SHALL BE ACCEPTED. ALL HARDWARE SHALL BE OFF THE SHELF EQUIPMENT, NO EQUIPMENT THAT CAN ONLY BE PURCHASED FROM OR CONFIGURED BY THE ORIGINAL SUPPLIER SHALL BE ACCEPTED. ALL SOFTWARE, HUMAN MACHINE INTERFACE (HMI), DATABASE, HISTORICAL DATA COLLECTION, REPORT GENERATION, ALARM NOTIFICATION AND PROGRAMMABLE LOGIC CONTROLLER PROGRAMMING SHALL BE VIA OFF THE SHELF SOFTWARE. NO SOFTWARE SHALL BE ACCEPTED THAT CAN ONLY BE PURCHASED FROM AND PROGRAMMED BY THE ORIGINAL SUPPLIER.
2. IF HARDWARE OTHER THAT THOSE LISTED (APPROVED EQUALS) IS FURNISHED, THE CONTRACTOR SHALL PROVIDE PROGRAMMING AND CONFIGURATION SOFTWARE. ALL PROGRAMMABLE LOGIC CONTROLLERS AND REMOTE IO SHALL COMMUNICATE VIA ETHERNET IP.
3. IF PLC EQUIPMENT OTHER THAN THOSE LISTED (APPROVED EQUALS) IS FURNISHED THE CONTRACTOR SHALL PROVIDE CONTROL PANEL FABRICATION DRAWINGS AND WIRING DIAGRAMS, ORIGINAL EDITABLE BID DRAWINGS WILL NOT BE SUPPLIED. THE CONTRACTOR SHALL FURNISH DRAWINGS IN ELECTRONIC FORMAT IN AUTOCAD 2019.

NONE
REMOTE TELEMETRY RTU PLC PANEL

Gaines, Williams & Associates, Inc.
Engineers
P.O. Box 38688
Germantown, Tennessee 38183-0688
Voice: 901-756-9065
Fax: 901-756-9066
www.gaineswilliams.com

A2H ENGINEERS ARCHITECTS PLANNERS
A2H, INC.
3009 DAVIES PLANTATION ROAD
LAKELAND, TN 38002
P. 901.372.0404
WWW.A2H.COM

TOWN OF ALAMO

2018 ALAMO WATER SYSTEM IMPROVEMENTS

ALAMO, TN

NOT FOR CONSTRUCTION

REVISIONS

PROJECT NO.	DATE
17410	FEBRUARY 5, 2019
DRAWN	CHECKED
RSG	RSG

REMOTE TELEMETRY PLC PANEL

CN1.13

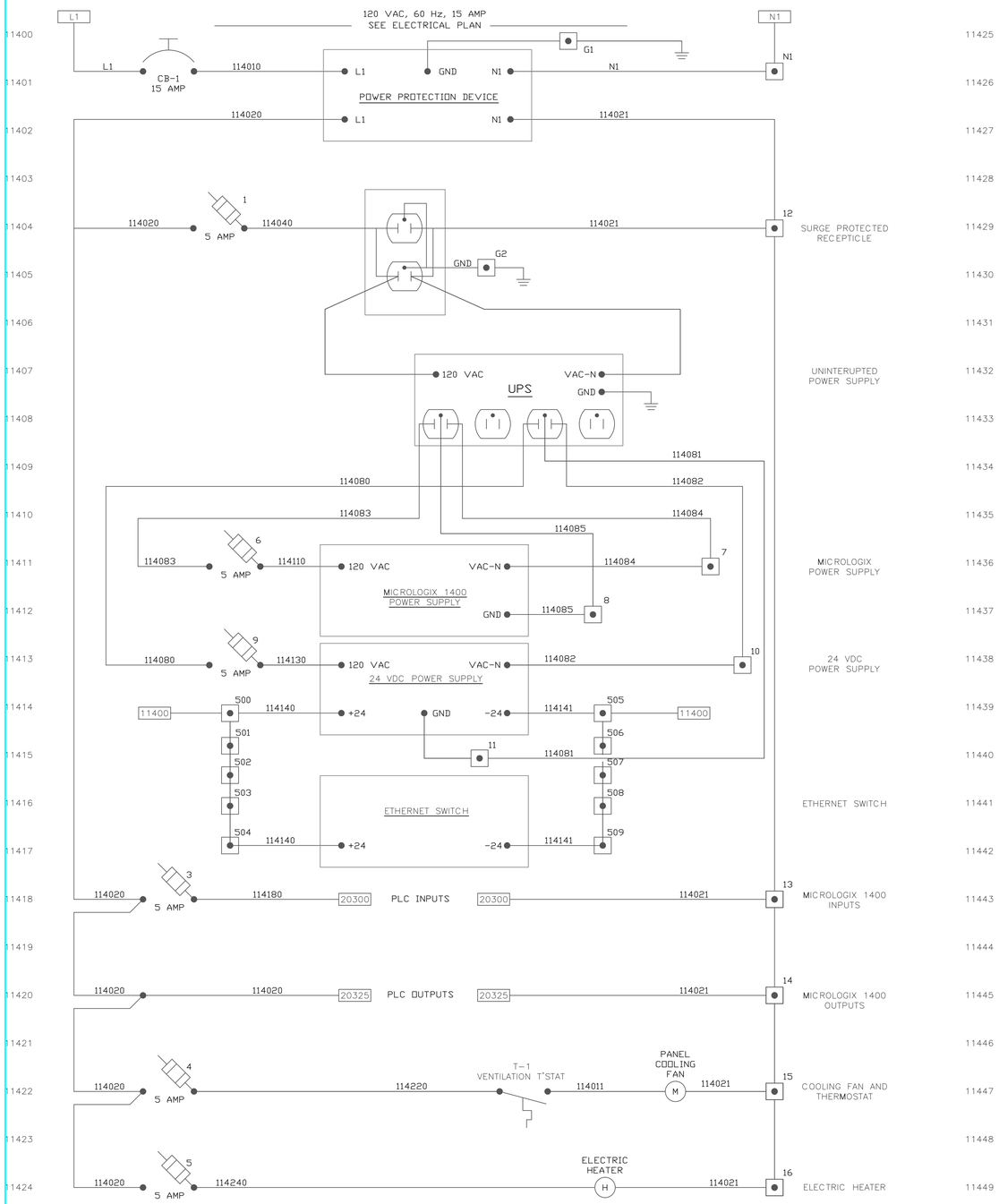

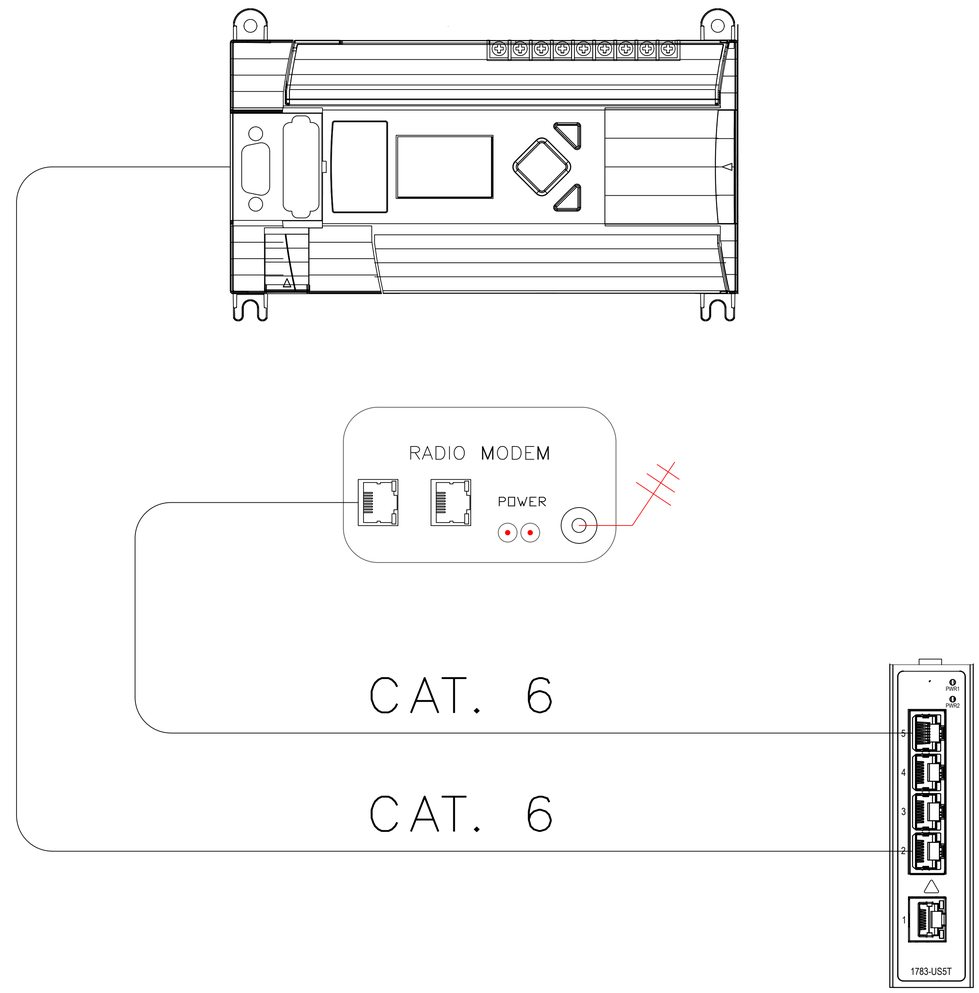

A2H ENGINEERS ARCHITECTS PLANNERS

A2H, INC.
3009 DAVIES PLANTATION ROAD
LAKELAND, TN 38002
P. 901.372.0404
WWW.A2H.COM

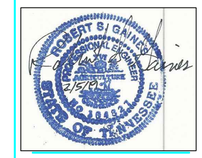

TOWN OF ALAMO

2018 ALAMO WATER SYSTEM IMPROVEMENTS

ALAMO, TN

NOT FOR CONSTRUCTION

REVISIONS

PROJECT NO.	DATE
17410	FEBRUARY 5, 2019
DRAWN	CHECKED
RSG	RSG

REMOTE TELEMETRY PANEL POWER WIRING

Gaines, Williams & Associates, Inc.
Engineers
P.O. Box 38688
Germantown, Tennessee 38183-0688
Voice: 901-756-9065
Fax: 901-756-9066
www.gaineswilliams.com

CN1.14

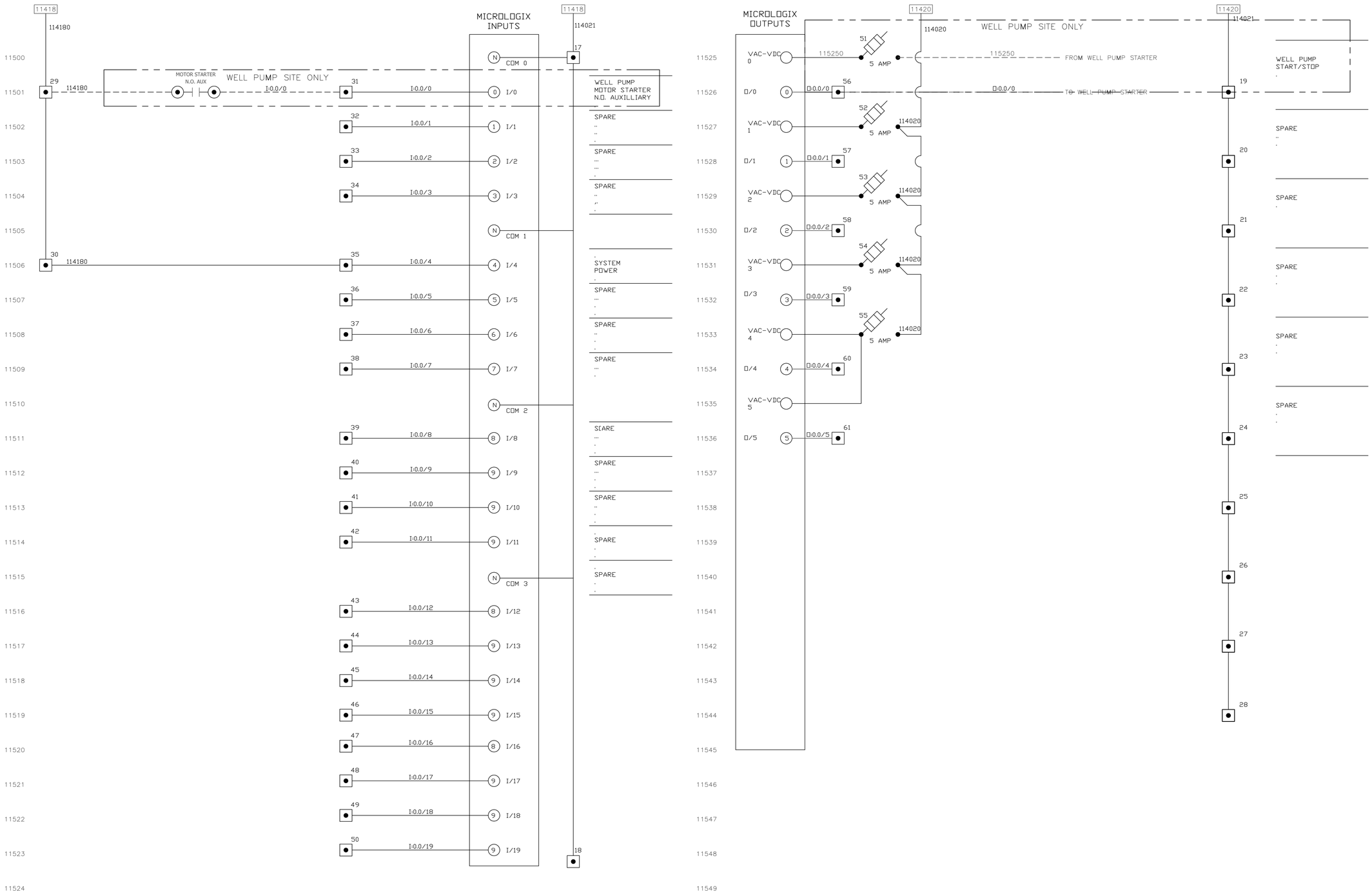

A2H ENGINEERS ARCHITECTS PLANNERS

A2H, INC.
3009 DAVIES PLANTATION ROAD
LAKELAND, TN 38002
P. 901.372.0404
WWW.A2H.COM

TOWN OF ALAMO

2018 ALAMO WATER SYSTEM IMPROVEMENTS

ALAMO, TN

NOT FOR CONSTRUCTION

REVISIONS

PROJECT NO.	DATE
17410	FEBRUARY 5, 2019
DRAWN	CHECKED
RSG	RSG

REMOTE TELEMETRY PLC PANEL INPUT & OUTPUT WIRING

Gaines, Williams & Associates, Inc.
Engineers
P.O. Box 38688
Germantown, Tennessee 38183-0688
Voice: 901-756-9065
Fax: 901-756-9066
www.gaineswilliams.com

CN1.15

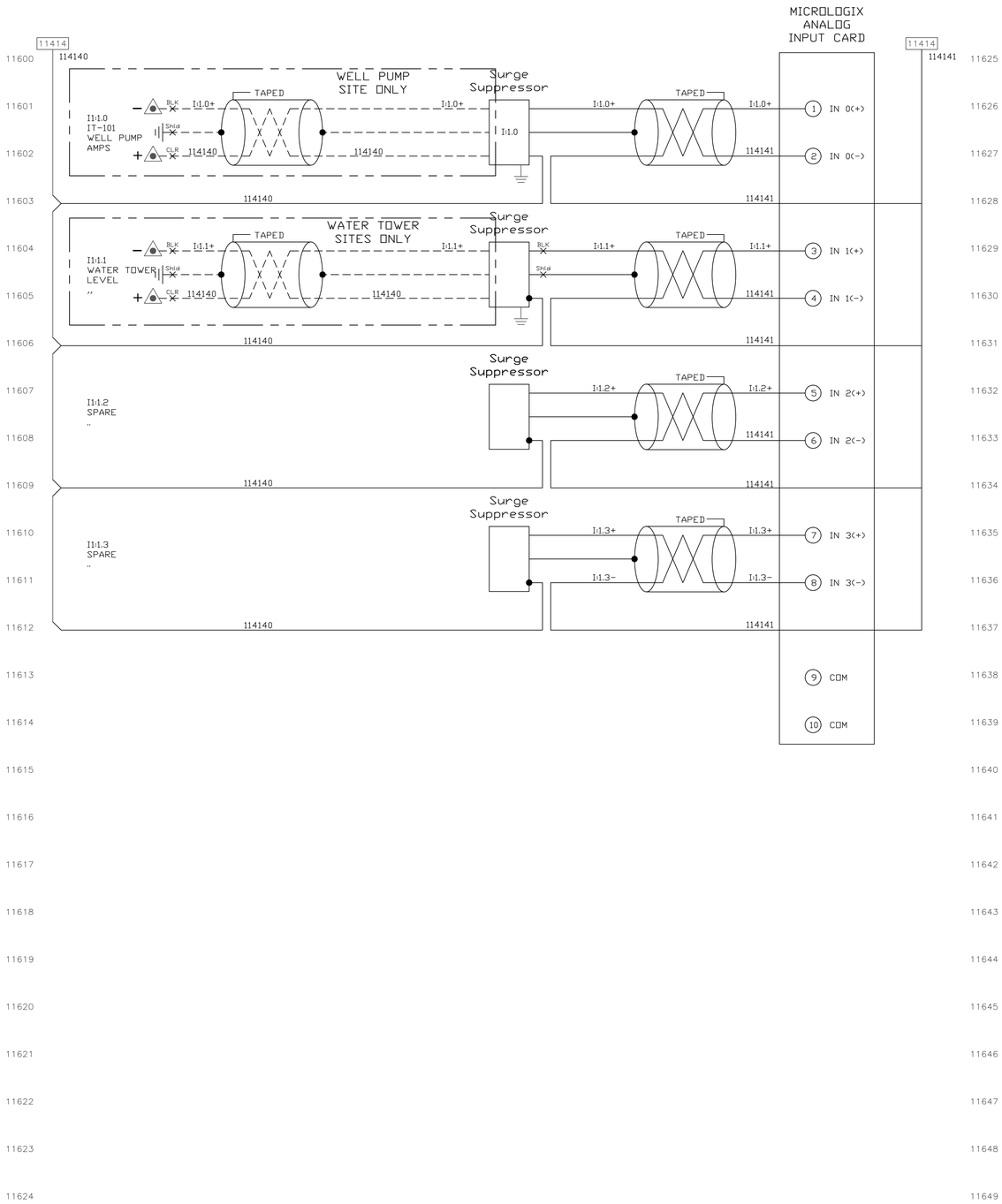

A2H, INC.
3009 DAVIES PLANTATION ROAD
LAKELAND, TN 38002
P. 901.372.0404
WWW.A2H.COM

TOWN OF ALAMO

2018 ALAMO
WATER SYSTEM
IMPROVEMENTS

ALAMO, TN

NOT FOR CONSTRUCTION

REVISIONS

PROJECT NO.	DATE
17410	FEBRUARY 5, 2019
DRAWN	CHECKED
RSG	RSG

REMOTE TELEMETRY PLC
PANEL
ANALOG INPUT WIRING

Gaines, Williams & Associates, Inc.
Engineers
P.O. Box 38688
Germantown, Tennessee 38183-0688
Voice: 901-756-9065
Fax: 901-756-9066
www.gaineswilliams.com

CN1.16