Landfill Leachate Collection Systems
Reviewing the Basics

47th Annual
Environmental Show of the South
May 16-18, 2018

Prepared by:

EIL
ENVIRONMENTAL INFORMATION LOGISTICS, LLC

Sponsored by:

TN Department of Environment & Conservation

Outline

- Introduction
- Purpose
- Regulatory Requirements
- System Components
  - Drainage and Collection
  - Removal and Storage
  - Treatment and Disposal
  - Installation and Other Applications
- Operation & Maintenance
- Minimizing Leachate Generation
- Summary and Closing

EIL
ENVIRONMENTAL INFORMATION LOGISTICS, LLC

Introduction

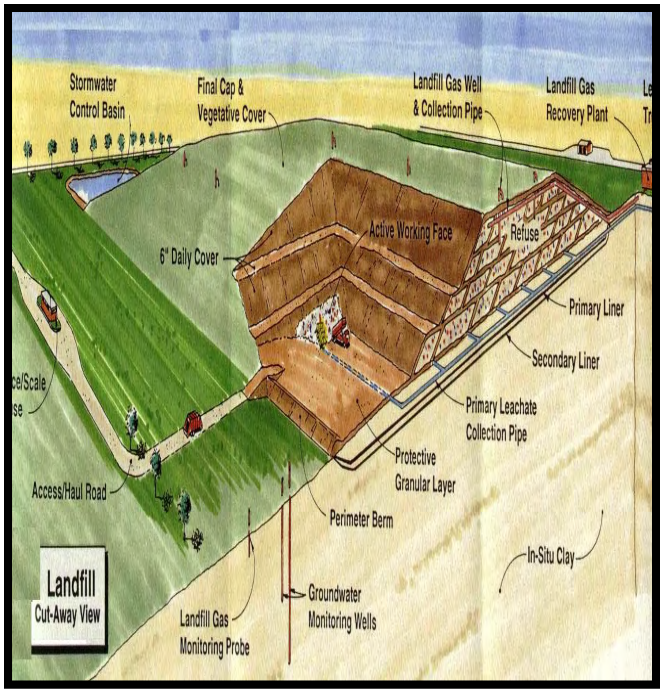

<u>Leachate Collection and Removal System (LCRS)</u>

- Required feature at Class I Facility
- Reqmt to limit leachate head
- Properly designed and functioning LCRS is important
- Management of leachate among highest operating costs

<u>Let's review basics of LCRS…</u>

EIL
ENVIRONMENTAL INFORMATION LOGISTICS, LLC

Purpose of LCRS

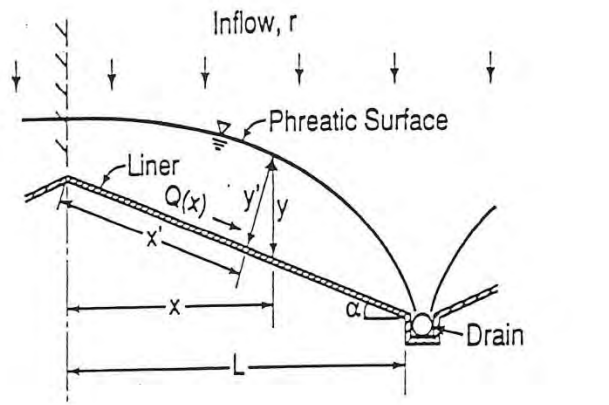

Figure 1 Definition Sketch for Landfill Leachate Drainage System

(Credit: Qian, 1993)

- Systems in place **<u>prevent leachate from leaving site</u>**, including:
  - Liner, Leachate, Storm Water, LFG, Daily and Final Covers
- Collection/removal system is **<u>key component</u>** of containment system
  - Req'd to manage leachate to < 1'
  - Capture leachate produced
  - Collect and remove leachate
- **<u>Leachate:</u>** liquid (primarily rainwater) that passes thru waste

EIL ENVIRONMENTAL INFORMATION LOGISTICS, LLC

Regulatory Requirements - TN

<u>TDEC – Chapter 0400-11-01-04(4)(a):</u>

(5) LCRS system required above liner that is designed, constructed, maintained, and operated to collect / remove leachate

- Materials chemically resistant to waste managed and leachate expected to be generated
- Sufficient strength and thickness to prevent collapse under pressures exerted

RULES
OF
TENNESSEE DEPARTMENT OF ENVIRONMENT AND CONSERVATION
SOLID WASTE MANAGEMENT

CHAPTER 0400-11-01
SOLID WASTE PROCESSING AND DISPOSAL

0400-11-01-.04 SPECIFIC REQUIREMENTS FOR CLASS I, II, III, AND IV DISPOSAL FACILITIES.

(4) Leachate Migration Control Standards

(a) Class I Disposal Facilities

5. A leachate collection and removal system is required immediately above the liner that is designed, constructed, maintained, and operated to collect and remove leachate from the facility. The leachate collection and removal system must be:

(i) Constructed of materials that are:

(I) Chemically resistant to the waste managed in the facility and the leachate expected to be generated; and

(II) Of sufficient strength and thickness to prevent collapse under the pressures exerted by overlying wastes, waste cover materials, and by any equipment used at the facility. Other equivalent or superior protection may be substituted for this buffer as approved by the Commissioner.

(ii) Protected, by design and/or operational features, from equipment mishandling that might reasonably be expected during operation.

7. The leachate collection and removal system must, at a minimum, meet the following requirements:

(i) The leachate collection and removal system must be designed, constructed, operated, and maintained such that the leachate depth over the liner does not exceed one foot as calculated referencing the infiltration volume of the 25-year 24-hour storm through the intermediate cover.

(ii) Leachate interception surfaces and associated piping must be designed, constructed, operated, and maintained to function without clogging throughout the scheduled post-closure care period;

(iii) Leachate collection reservoirs must:

(I) Be constructed (e.g., lined) such that collected leachate is contained;

(II) Have sufficient capacity to store the volume of leachate expected to be generated in 30 days, or other adequate provisions approved by the Commissioner; and

(III) Have a reliable and convenient means of detecting the level of collected leachate in the reservoir and of sampling such leachate.

8. Collected leachate:

(i) Must be managed in accordance with any other applicable state and local regulations; and

(ii) Must be sampled and analyzed, at least annually for Appendix I constituents, or for those ground water monitoring parameters listed in the permit, using sampling and analysis procedures as found in the facility permit. All leachate analysis results with all pertinent supporting data must be reported to the Commissioner with the next semi-annual ground water analysis report.

(iii) Nothing in this rule shall prohibit the recirculation of leachate through the emplaced waste provided that the requirements of this Chapter are met.

EIL
ENVIRONMENTAL INFORMATION LOGISTICS, LLC

Regulatory Requirements - TN

<u>TDEC – Chapter 0400-11-01-04(4)(a):</u>

(7) LCRS must meet following reqmts (designed, constructed, operated, and maintained):

- Leachate depth over liner <= 1' (referencing 25-yr, 24-hr storm infiltration vol thru intermediate cover)
- Leachate interception surfaces / piping to function without clogging throughout post-closure period
- Leachate collection reservoirs must:
  - Be constructed such that collected leachate is contained
  - Have sufficient capacity to store the volume of leachate expected to be generated in 30 days
  - Have a reliable and convenient means of detecting the level and sampling of collected leachate

RULES
OF
TENNESSEE DEPARTMENT OF ENVIRONMENT AND CONSERVATION
SOLID WASTE MANAGEMENT

CHAPTER 0400-11-01
SOLID WASTE PROCESSING AND DISPOSAL

0400-11-01-.04 SPECIFIC REQUIREMENTS FOR CLASS I, II, III, AND IV DISPOSAL FACILITIES.

(4) Leachate Migration Control Standards

(a) Class I Disposal Facilities

5. A leachate collection and removal system is required immediately above the liner that is designed, constructed, maintained, and operated to collect and remove leachate from the facility. The leachate collection and removal system must be:

(i) Constructed of materials that are:

(I) Chemically resistant to the waste managed in the facility and the leachate expected to be generated; and

(II) Of sufficient strength and thickness to prevent collapse under the pressures exerted by overlying wastes, waste cover materials, and by any equipment used at the facility. Other equivalent or superior protection may be substituted for this buffer as approved by the Commissioner.

(ii) Protected, by design and/or operational features, from equipment mishandling that might reasonably be expected during operation.

7. The leachate collection and removal system must, at a minimum, meet the following requirements:

(i) The leachate collection and removal system must be designed, constructed, operated, and maintained such that the leachate depth over the liner does not exceed one foot as calculated referencing the infiltration volume of the 25-year 24-hour storm through the intermediate cover.

(ii) Leachate interception surfaces and associated piping must be designed, constructed, operated, and maintained to function without clogging throughout the scheduled post-closure care period;

(iii) Leachate collection reservoirs must:

(I) Be constructed (e.g., lined) such that collected leachate is contained;

(II) Have sufficient capacity to store the volume of leachate expected to be generated in 30 days, or other adequate provisions approved by the Commissioner; and

(III) Have a reliable and convenient means of detecting the level of collected leachate in the reservoir and of sampling such leachate.

8. Collected leachate:

(i) Must be managed in accordance with any other applicable state and local regulations; and

(ii) Must be sampled and analyzed, at least annually for Appendix I constituents, or for those ground water monitoring parameters listed in the permit, using sampling and analysis procedures as found in the facility permit. All leachate analysis results with all pertinent supporting data must be reported to the Commissioner with the next semi-annual ground water analysis report.

(iii) Nothing in this rule shall prohibit the recirculation of leachate through the emplaced waste provided that the requirements of this Chapter are met.

EIL
ENVIRONMENTAL INFORMATION LOGISTICS, LLC

Regulatory Requirements - TN

<u>TDEC – Chapter 0400-11-01-04(4)(a):</u>

(8) Collected leachate:

- Managed in accordance w/ appl regs
- Sampled and analyzed

RULES
OF
TENNESSEE DEPARTMENT OF ENVIRONMENT AND CONSERVATION
SOLID WASTE MANAGEMENT

CHAPTER 0400-11-01
SOLID WASTE PROCESSING AND DISPOSAL

0400-11-01-.04 SPECIFIC REQUIREMENTS FOR CLASS I, II, III, AND IV DISPOSAL FACILITIES.

(4) Leachate Migration Control Standards

(a) Class I Disposal Facilities

5. A leachate collection and removal system is required immediately above the liner that is designed, constructed, maintained, and operated to collect and remove leachate from the facility. The leachate collection and removal system must be:

(i) Constructed of materials that are:

(I) Chemically resistant to the waste managed in the facility and the leachate expected to be generated; and

(II) Of sufficient strength and thickness to prevent collapse under the pressures exerted by overlying wastes, waste cover materials, and by any equipment used at the facility. Other equivalent or superior protection may be substituted for this buffer as approved by the Commissioner.

(ii) Protected, by design and/or operational features, from equipment mishandling that might reasonably be expected during operation.

7. The leachate collection and removal system must, at a minimum, meet the following requirements:

(i) The leachate collection and removal system must be designed, constructed, operated, and maintained such that the leachate depth over the liner does not exceed one foot as calculated referencing the infiltration volume of the 25-year 24-hour storm through the intermediate cover.

(ii) Leachate interception surfaces and associated piping must be designed, constructed, operated, and maintained to function without clogging throughout the scheduled post-closure care period;

(iii) Leachate collection reservoirs must:

(I) Be constructed (e.g., lined) such that collected leachate is contained;

(II) Have sufficient capacity to store the volume of leachate expected to be generated in 30 days, or other adequate provisions approved by the Commissioner; and

(III) Have a reliable and convenient means of detecting the level of collected leachate in the reservoir and of sampling such leachate.

8. Collected leachate:

(i) Must be managed in accordance with any other applicable state and local regulations; and

(ii) Must be sampled and analyzed, at least annually for Appendix I constituents, or for those ground water monitoring parameters listed in the permit, using sampling and analysis procedures as found in the facility permit. All leachate analysis results with all pertinent supporting data must be reported to the Commissioner with the next semi-annual ground water analysis report.

(iii) Nothing in this rule shall prohibit the recirculation of leachate through the emplaced waste provided that the requirements of this Chapter are met.

EIL
ENVIRONMENTAL INFORMATION LOGISTICS, LLC

Regulatory Requirements – Others

- Refer to specific state regulations
  - All states little different – more/less detail
  - basics, at min, addressed in most if not all
- Most states allow flexibility in alternative designs
- KY, NC, SC, GA, AL – minimal to more detail
  - KY: main (8") and lateral (4") pipes noted, and 50' flow distance
- IL – some detail
  - Drainage System: head level, precip, thickness, hyd conductivity
  - Collection System: pipes, cleaning, materials
  - Treatment and Disposal System: combination of options
  - Monitoring: collect and test
- WI – very detailed
  - dictates head level, thickness, hyd conductivity, infiltration, slopes, pipe spacing, cleanout lengths, sizes, gradations, etc.

EIL
ENVIRONMENTAL INFORMATION LOGISTICS, LLC

System Components - Drainage and Collection System

Design Details and Layout

- Drainage layer above base liner (sand, gravel, geocomposite)
- System of perforated piping w/ aggregate in trenches
- Aggregate-filled sumps (low points) w/ access risers

Typ Design Criteria

- Min 1' thick granular drainage blanket (or geosynthetic media)
- Saturated hydraulic conductivity 1×10^{-3} cm/sec to 1 cm/sec
- Gradation limits and limits on material content
- Placement of aggregate backfill (under, around, over piping)
- Gradation of trench aggregate not clog perforated pipe
- Min dia for collection pipes = 6" (Sch 80 PVC or equiv HDPE)
- Cleanout risers at ends of leachate collection pipes and sumps
- Limits on max cleanout lengths (1000', 1200', 2000')

Typ Layout Criteria

- Drainage distance (spacing) based on demonstrating < 1' head
- Grading – 1% slopes to collection piping, 0.5% min along lines

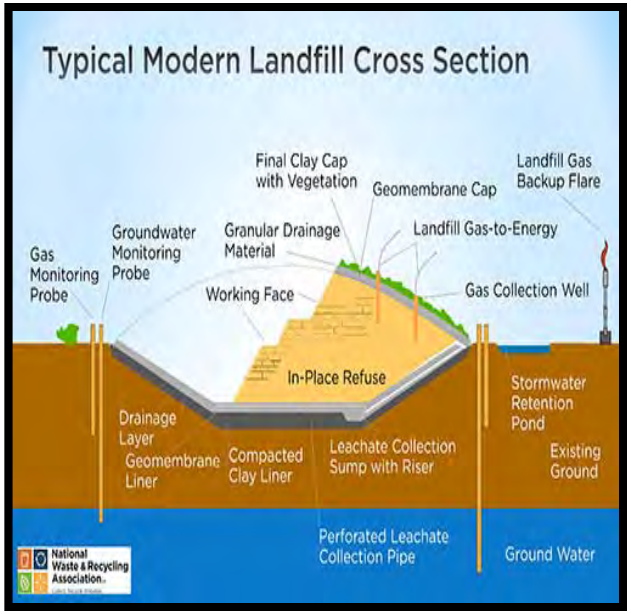

(Credit: internet source)

ENVIRONMENTAL INFORMATION LOGISTICS, LLC

Drainage and Collection System

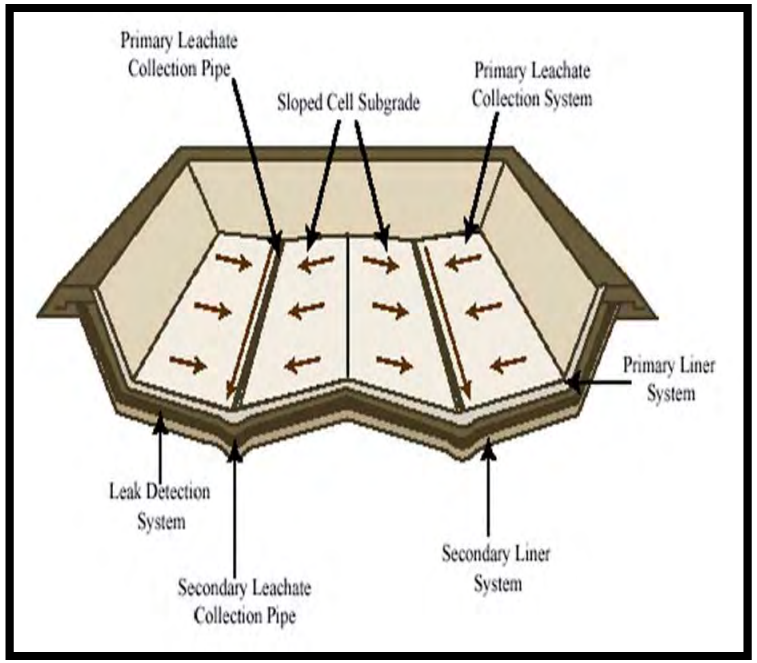

(Credit: internet source)

<u>Design Analyses</u>

- Leachate generation: via HELP Model (water balance calc for x-section of landfill based on climatologic and geologic inputs)
- Leachate head and flow: via HELP Model, McEnroe Eq, others
- Leachate pipe flow capacity (i.e., drainage calcs)
- Leachate collection pipe strength calcs (various methods, total load w/ size)
- Application of methodology/assumptions

Factors affecting leachate head or mounding

- Percolation rate, hyd cond of drainage layer, flow distance to pipes, slope of base

EIL ENVIRONMENTAL INFORMATION LOGISTICS, LLC

Typical Design Details

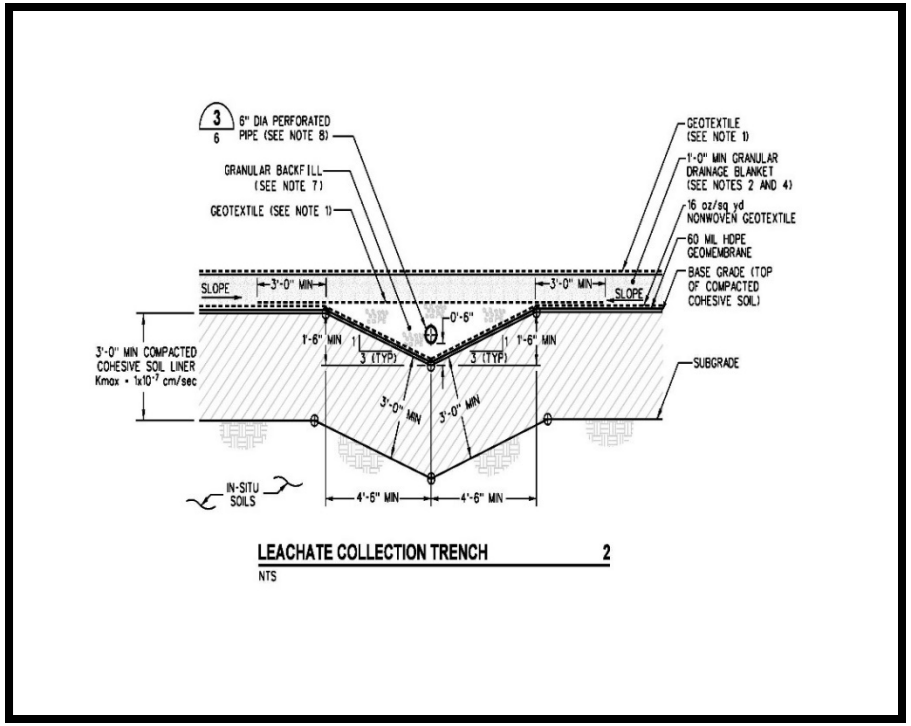

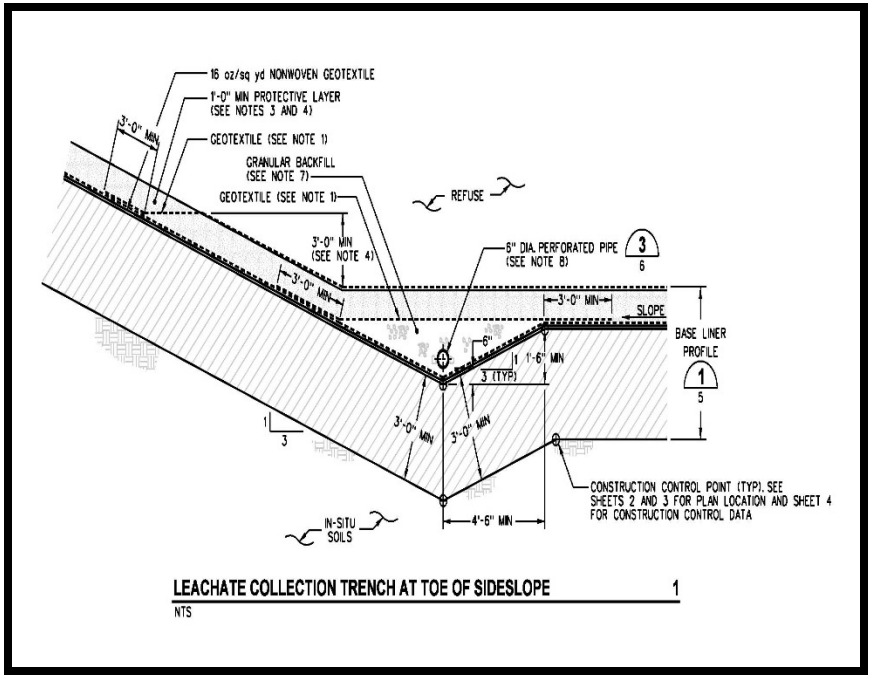

Base liner, leachate collection layer, and pipe trench

EIL
ENVIRONMENTAL INFORMATION LOGISTICS, LLC

Design Layouts

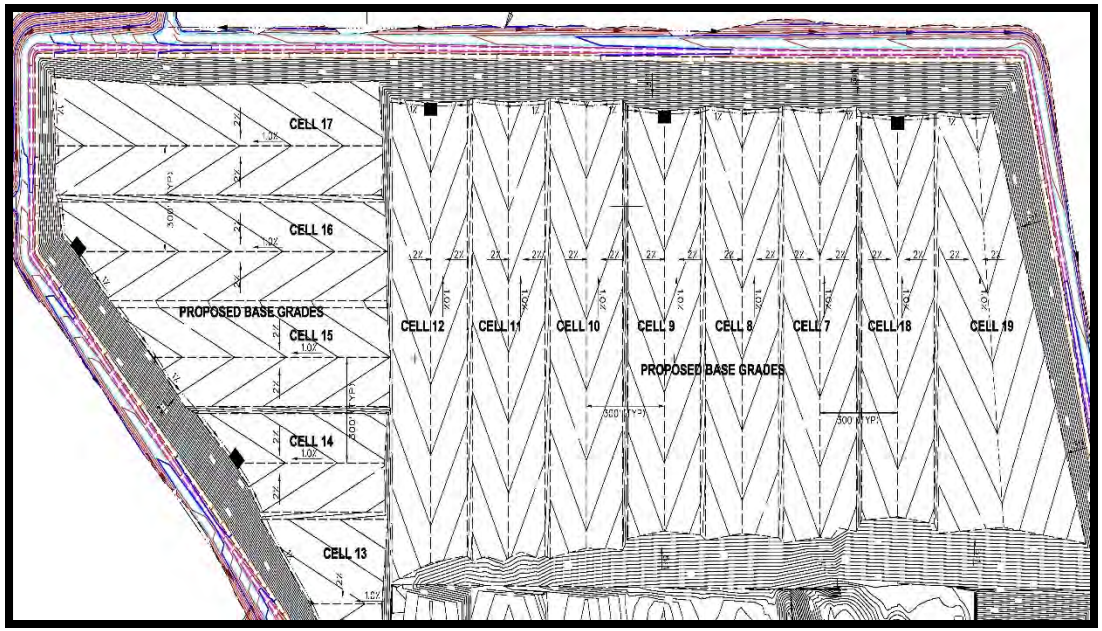

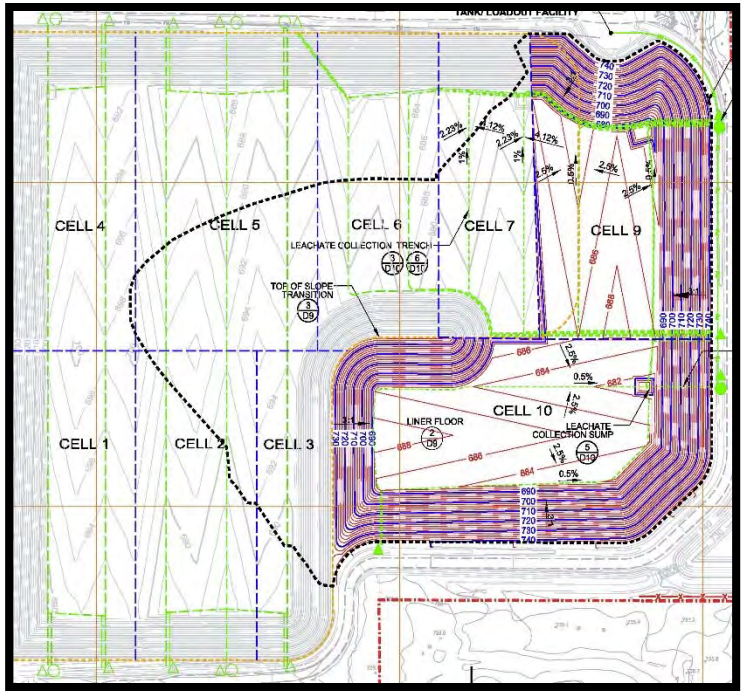

Base grading and leachate collection system plan layouts (w/ grading, spacing, sumps, and cleanouts)

EIL
ENVIRONMENTAL INFORMATION LOGISTICS, LLC

System Components - Removal and Storage System

<u>Design Details and Layout</u>

- Aggregate-filled sumps (low points) w/ access risers for removal
- Cells generally have own sump
  - located at perimeter for access
- Forethought – master plan – avoid future conflicts
- Sideslope systems (vertical manholes as early designs; change over time)
- Sideslope sump riser pipes (18" min dia) w/ submersible pumps (transducer controlled or manually activated)
- Top of slope termination (sometimes vault) where removed

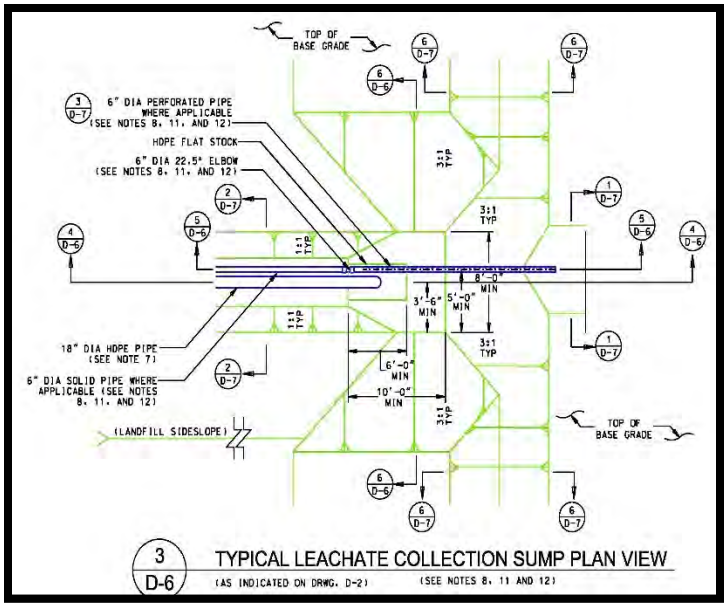

ENVIRONMENTAL INFORMATION LOGISTICS, LLC

Removal and Storage System

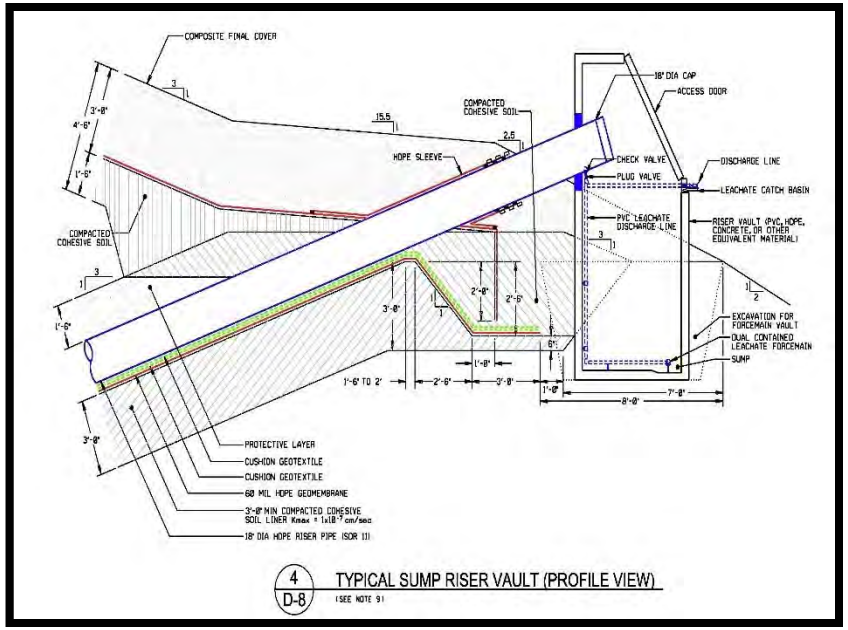

Design Analyses

- Sump volume sizing
- Leachate storage sizing calcs (min capacity reqmts)
- HELP Model results or other dictated values
- Application of methodology/assumptions

Transfer and Storage

- Pumped to loadout connection or forcemain
- Components (FM piping, risers, manholes, tanks, located outside lined areas (sec containment))
- Above-ground storage tanks, ponds, recirculation, trucks, offsite disposal
- Tanks equipped w/ pumps and load-out facility
- Pumped to tanker truck, indirect POTW sewer connection, or direct discharge to environment

EIL
ENVIRONMENTAL INFORMATION LOGISTICS, LLC

Typical Design Details

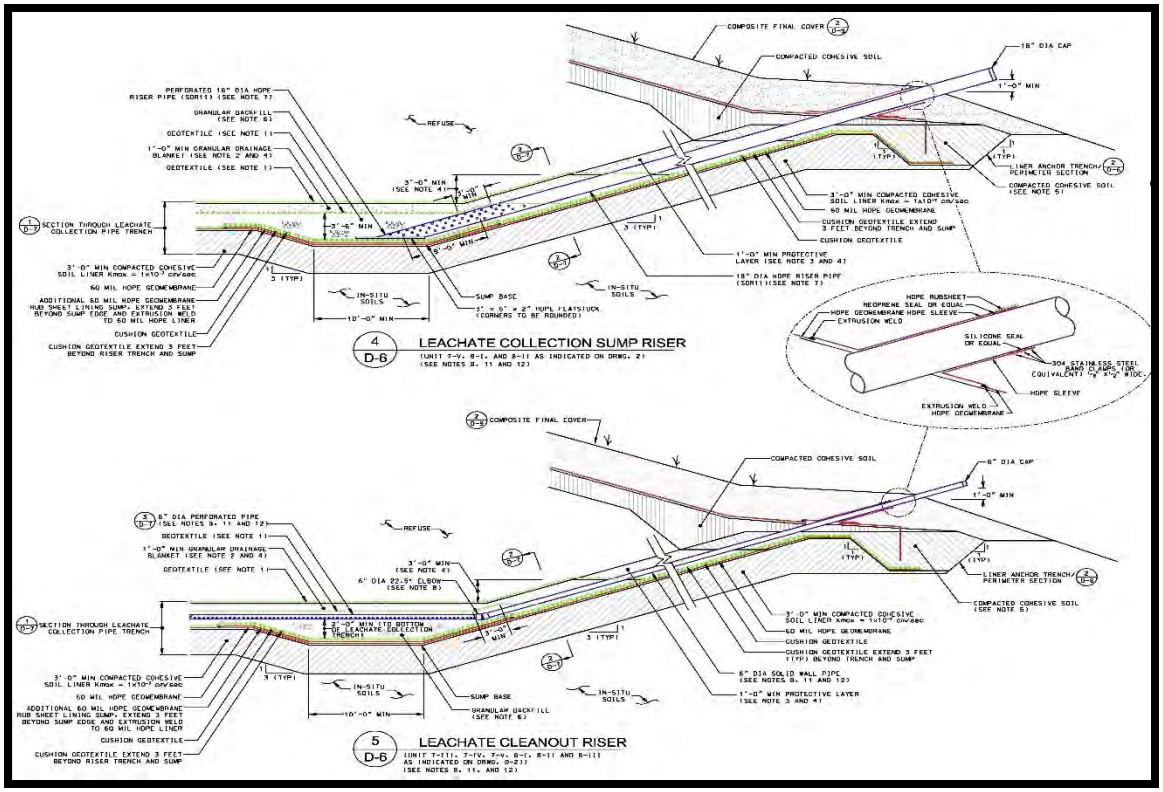

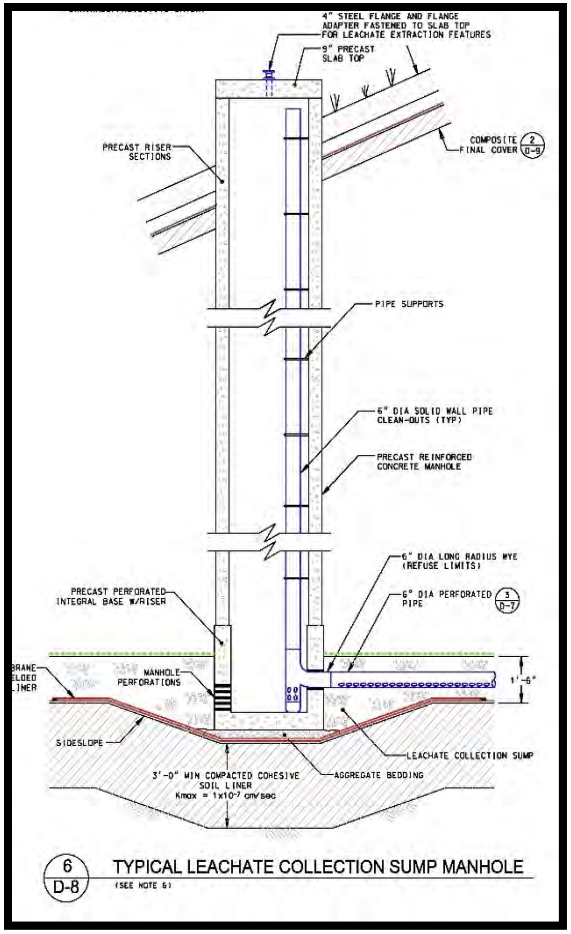

Cross-section thru sideslope sump and cleanout risers (current), and vertical manhole (older)

EIL
ENVIRONMENTAL INFORMATION LOGISTICS, LLC

Examples of Perimeter Sump Controls

(Credit: various internet sources)

EIL
ENVIRONMENTAL INFORMATION LOGISTICS, LLC

System Components – Treatment and Disposal System

Transfer systems route to storage/load-out facilities

Storage systems (capacity and secondary containment reqmts, material compatible w/ leachate, no malodor)

<u>Treatment Options</u>

- Onsite Treatment and Pretreatment (tanks, ponds, filtration systems)
- Offsite treatment works – transport to licensed waste water pretreatment or treatment plant for treatment and disposal
  - via hauling or sewer connection
- Leachate recirculation or recycling
- Other management (treatment/disposal) alts
- Direct discharge to environment

EIL
ENVIRONMENTAL INFORMATION LOGISTICS, LLC

Installation

Construction / Installation

- Large earthmoving and excavation operation
- Place or install liner
- Grade trenches and sumps
- Place aggregate and install piping
- Install drainage blanket
- CQA, especially during aggregate, pipe, and drainage blanket placement
- Good construction and documentation is KEY
- Pay particular attention to field construction practices
  - Avoid debris accumulation in pipes
  - Avoid poor pipe joints which can impede drainage
  - Consider post-construction flush

EIL
ENVIRONMENTAL INFORMATION LOGISTICS, LLC

Typical Installations (Credit: various internet sources)

EIL
ENVIRONMENTAL INFORMATION LOGISTICS, LLC

Typical Installations (Credit: site installations and various internet sources)

EIL
ENVIRONMENTAL INFORMATION LOGISTICS, LLC

Other Applications

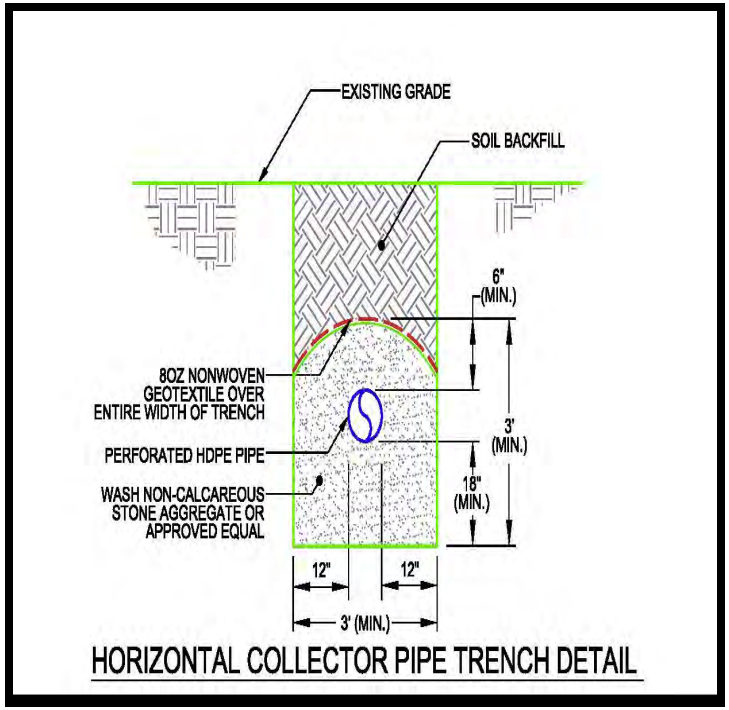

- Horizontal Collectors
  - Leachate seeps
  - Remediation
  - Elevated temperature sites (multiple layers of systematically spaced lines collect/remove accumulated leachate and/or cool waste mass)
- LFG extraction systems
- Leachate extraction systems
- Leachate recirculation systems
- Phytoremediation

EIL
ENVIRONMENTAL INFORMATION LOGISTICS, LLC

Operation & Maintenance

Operation

- Collection system for gravity flow to low points where leachate is withdrawn
- Free-draining from pipes to sumps (i.e., collection points)
- Submersible pumps for removal
- Forcemain piping transfers to tanks, temp tanker trucks, sewer, or loadout to trucks
- Electronically programmed pressure transducer ensures leachate level on top of liner < 1' (automatically)
- Manually operated and/or manual checks

Leachate Recirculation

- Leachate is recirculated into LF via pipe system
- May not be as prevalent
- Advantages and disadvantages

EIL ENVIRONMENTAL INFORMATION LOGISTICS, LLC

Operation & Maintenance

Monitoring/Inspections

- Leachate level detection system maintains levels w/ routine operations
- Routine monitoring of levels
- Components and levels also monitored per routine facility inspections and sampling
- Difficult since majority of system is buried
- Inspections
  - ✓ Look for evidence of clogging or general system repair
  - ✓ Noting evidence of problems
  - ✓ Measuring problems (documentation at installation critical; use for review and justification if problems later)
  - ✓ Act as needed

EIL
ENVIRONMENTAL INFORMATION LOGISTICS, LLC

Operation & Maintenance

<u>Maintenance/Cleaning (i.e., problems exp'd)</u>

- Cleaned and maintained as necessary
- Evidence of clogging or general system repair
- Necessity for cleaning based on irregularities in collection system performance (volumes, pumps, etc.)
- Build-up of scale, bio-rock, clogging
- Flow and/or pump issues

Experiences at Elevated Temperature Sites

- Increasing numbers of MSW LF's reporting unusually hot temp's
- Landfills operated w/ leachate collection provisions are generally cooler than thicker landfills where liquids are added
- One (of many) symptoms – leachate collection system fouling / clogging
- Accelerated schedule of pipe jetting and pump maintenance to keep LCS clear of scale

There's got to be a better way, or at least a good way ?!?

ENVIRONMENTAL INFORMATION LOGISTICS, LLC

Pipe Cleaning – Why & When

Purpose

- Facilitate flow
- Remove bio-mass, debris
- Open blocked perforations
- Identify existence of damage

Frequency

- Varies greatly
- From: as-needed to routine to emergency
- Annually, semi-annually, bi-annually, other
- Refer to specific state regulations:
  - NC - cleaned annually or demonstrate, camera inspection reqmts also
  - Others – permit renewal, const completion, annually
  - Check requirements, rules, bills

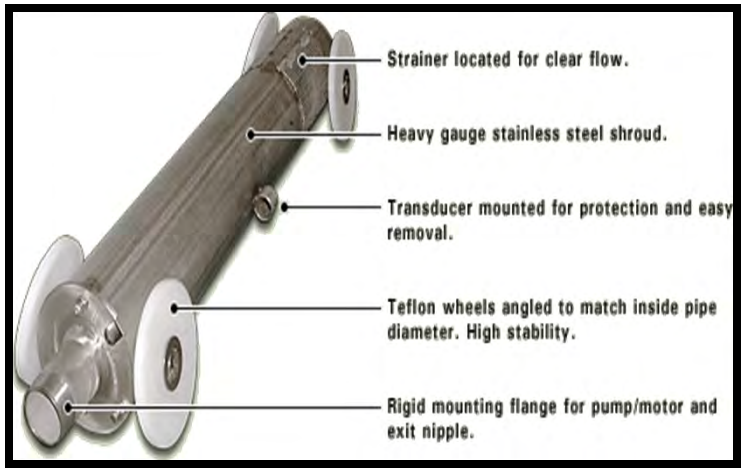

Sideslope Sump Riser Pump (typ)
(Credit: internet source)

EIL
ENVIRONMENTAL INFORMATION LOGISTICS, LLC

Pipe Cleaning - How

<u>Pipe Cleaning Methods (i.e., solutions)</u>

- Assess and use correct resources
- Hydraulic jetting (flushing) – high pressure water jet equipped w/ nozzle
- Vacuum applications
- Chemical methods (i.e., specialized chemical descalers, acid treatments)
- Scale treatment technology
- Mechanical procedures – rodding, roto-routers, pigs, sewer balls, snakes, etc.
- Video camera
- Handling / Disposal
  - liquids as leachate
  - debris to the active face or hauled offsite

Credit: Jetclean America, various internet sources

EIL ENVIRONMENTAL INFORMATION LOGISTICS, LLC

Cleaning Methods

Hydraulic Jetting or Flushing

- Injected thru the cleanout and pipe to verify pipe integrity and clean the lines as pull back
- Frequently used
- New, existing, or closed landfill applications
- Limitations
  - Cleaning Length = 600', 1200' (ok), 1500', 2000' (max)
  - Video Length = 1600' (max)
  - Design stage important for thinking ahead
  - Installation key – welds, bends (block, hinder)
  - Correct equipment (hose size, etc.)
  - Deposited bio-mass/bio-rock may be difficult w/ this alone
- Higher pressure application to remove (experience)

Suggested Procedures

- Review set-up
- Remove as much leachate as possible first
- Clean pipes and riser pipes
- Use vac truck
- Video ?
- Repeat as necessary

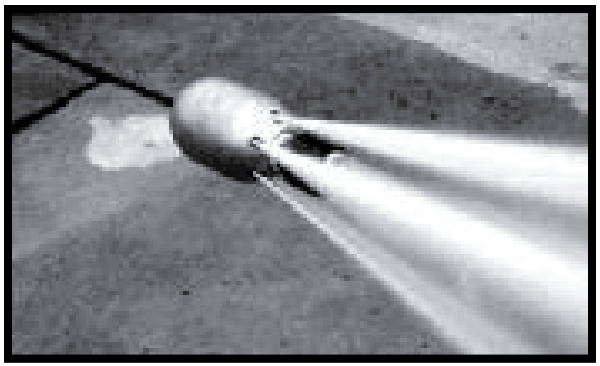

Jetting or Flushing
(Credit: Jetclean America, Hydro Klean)

ENVIRONMENTAL INFORMATION LOGISTICS, LLC

Cleaning Methods

Scale Treatment or Scale Control Technology

- Installed to work at riser, pump, access points, tanks
- Remove/control scale in piping (leachate de-scaler)
  - Electronic device applies energy pulses to alter scaling
  - Active catalytic effect forms microscopic seed crystals/clusters of calcium carbonate with other minerals
  - Precipitation of ions forming scale on solids in liquid
- Loosen, reduce, prevent, eliminate formation of mineral scale on piping and equipment
- Effects point where placed (and downstream - at bottom of riser or system access points) – need flow
- Supplement w/ high pressure cleaning or other for LCS pipe as needed
- Procedures: analyze site, customize system design, set system and notifications

Chemical Methods

- Application at any point of system where have/create flow
- Dissolve deposits
- Review use of material
- Supplement w/ high pressure cleaning

Electronic Descaling Systems and Chemical Methods

(Credit: Gii Scale Control Solutions, Goodway Technologies, and Private Landfill)

EIL ENVIRONMENTAL INFORMATION LOGISTICS, LLC

Cleaning Methods (Credit: various internet sources)

Leachate Collection Sump Cleaning
(Jetting and/or Suction)

Jetting Equipment
(Credit: Jetclean America)

Vacuum Trucks

EIL
ENVIRONMENTAL INFORMATION LOGISTICS, LLC

Minimizing Leachate Generation

Management of leachate among highest operating costs - and is increasing

- Cut off from treatment plants
- Extended transport
- Higher rainfalls

Minimize leachate before created - save time and money later

- Manage liquid as storm water
- Keep it from becoming leachate

EIL
ENVIRONMENTAL INFORMATION LOGISTICS, LLC

Minimizing Leachate Generation

Techniques

- Minimize working face or open area
- Well-maintained, designed, and placed covers
- Establish vegetation
- Minimize rainfall infiltration
- Effective surface water drainage systems
- Divert storm water as much as possible
- Separate storm water from leachate (i.e., rain flaps in open cells)
- Utilize / strategize w/ daily cover and ADC
- Reduce impact of lenses created by soil
- Continue to improve design and operation

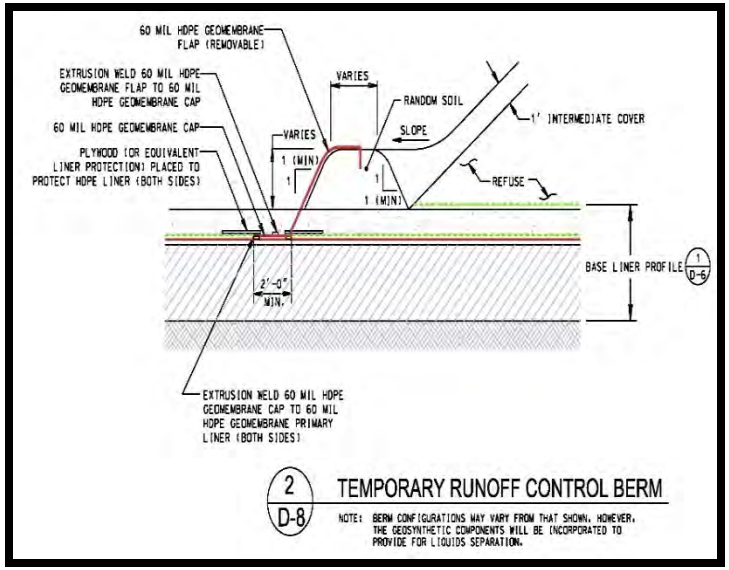

Incorporating these techniques

- Improve the effectiveness of LCRS
- Lead to an even more successful operation

EIL
ENVIRONMENTAL INFORMATION LOGISTICS, LLC

Use of ADC

Eliminate daily soil cover to extent possible !!

Daily cover has significant impact on operations and life:

- Soil eats-up capacity
- Compounded when > min required thickness applied

<u>Benefits of ADC:</u>

- Siting difficulties
- Conserve airspace
- Extend landfill life
- Minimize impacts of soil lenses (leachate/gas movement)
- Minimize or offset infiltration

EIL
ENVIRONMENTAL INFORMATION LOGISTICS, LLC

Summary and Closing

Leachate Collection / Removal System (LCRS)

- **Required feature at Class I Facility**
- **Requirement to limit leachate head on base**
- **Refer to specific state regulations**
- **Review design, installation, maintenance features**
- **Incorporate ideas to minimize leachate**
- **Properly designed and functioning LCRS is important to landfill's operation !**

EIL
ENVIRONMENTAL INFORMATION LOGISTICS, LLC

References/Sources of Information

- NEWIN. (March 2018). "Managing Landfill Leachate Webinar".
- Staley, Bryan. EREF (Feb 2018). "State of Practice of Landfill Leachate Management and Treatment in the U.S.".
- Varsho, Jessie. Geosyntec (Feb 2018). "Optimizing Leachate Pretreatment Operations in Response to Complex Leachate Quality".
- Karidis, Arlene. Waste360.com (Oct 2017). "How Controlling Leachate on the Front End at Landfills Can Minimize Headaches Later".
- Khatami, Ali. Foresternetwork.com (March 2017). "Leachate Collection Pipe Construction".
- Goodway Technologies (March 2017). "Why Removing Calcite (Limestone) from Landfill Leachate Systems' Lines Require Specialized Descaling Chemicals".
- Khatami, Ali. MSW Management (July 2016). "Leachate Collection Pipe Construction".
- Querio, Andrew. EIL (April 2016). "Use of ADC at Tennessee Landfills – a Refresher".
- Khatami, Ali. SCS Engineers (March 2016). "Recommendations for Jet Cleaning Leachate Collection Pipes".
- Grillo, Robert. Sustainable Renewable Energy Report (Sept 2014). "Energy Recycling – Landfill Waste Heat Generation and Recovery".
- Fickes, Mike. Waste360.com (Feb 2012). "Digging into Landfill Design".
- Madsen, Curt. TRC (2012). "Landfill Leachate Collection System Design".
- Munie, Joyce. IEPA (Jan 2003). "A Study of the Merits and Effectiveness of Alternate Liner Systems at Illinois Landfills".
- Park, Jim. UW-Madison (1997). "Leachate Collection System".
- Qian (1993). "Estimation of Maximum Saturated Depth on Landfill Liner".
- Company Literature – WM. "Leachate Collection and Management System".
- State Solid Waste Regulations - various.
- Design, Permit, and Guideline Documents (including criteria, detail and layout illustrations, and photographs) – various sites, companies, and sources.
- Information and Photos from Discussions/Websites in Industry (including various vendors and companies such as WM, RSI, ADS, Jetclean America, Gii Scale Control Solutions, Hydro Klean, and Goodway Technologies), and various other internet sources.

EIL
ENVIRONMENTAL INFORMATION LOGISTICS, LLC

Thank You!

Andrew Querio, P.E., CPESC

andy.querio@eilllc.com

(630) 254-9382

Chirag Nanavati

cr@eilllc.com

(630) 254-9392

ENVIRONMENTAL INFORMATION LOGISTICS, LLC

www.EILLLC.com