Eastman Chemical Company
P. O. Box 511
Kingsport, Tennessee 37662

Public Notice of Availability
of Confirmatory Performance Test Plan, Continuous Monitoring System Performance Evaluation Test Plan and Quality Assurance Program Plan for
Rotary Kiln Incinerator
Eastman Chemical Company
Kingsport, Tennessee
TND 00 337 6928

In accordance with the National Emissions Standards for Hazardous Air Pollutants for Hazardous Waste Combustors, 40 CFR Part 63, Subpart EEE, §63.1207(e)(2), Eastman Chemical Company (Eastman) announces the availability for public review of a confirmatory performance test plan, a continuous monitoring system (CMS) performance evaluation test plan and a quality assurance program plan for its rotary kiln incinerator Number 1. These tests are required per 40 CFR §63.1207(d)(2). The test plans have been submitted for approval to the Tennessee Division of Air Pollution Control. The CMS performance evaluation test is scheduled to begin on or after November 23, 2020. The confirmatory performance test is scheduled to be conducted on or after December 2, 2020 and expected to last for one to two days. The test plans will be available from September 23, 2020 through November 23, 2020.

Interested persons may review the confirmatory performance test plan, the continuous monitoring system (CMS) performance evaluation test plan and the quality assurance program plan at the following locations: Kingsport Public Library, Kingsport, Tennessee (Telephone 423-229-9488); Johnson City Environmental Assistance Center, Public Access Area, 2305 Silverdale Road, Johnson City, Tennessee 37601 (Telephone 423-854-5400); Tennessee Division of Air Pollution Control, Tennessee Tower William R. Snodgrass Building, 312 Rosa L Parks Avenue, Nashville, Tennessee 37243-1531 (Telephone 615-532-0605). Normal state office hours are 8:00 A.M. to 4:30 P.M. on weekdays, excluding legal holidays.

For further information contact: Mr. Jeryl Stewart, Tennessee Department of Air Pollution Control, Tennessee Tower William R. Snodgrass Building, 312 Rosa L Parks Avenue, Nashville, Tennessee 37243-1531 (615-532-0605) or Mr. Steve Gossett, Eastman Chemical Company, Tennessee Operations, P. O. Box 511, Kingsport, TN 37662 (Telephone 423-229-2327). Due to COVID-19, copies of the documents can be emailed upon request.

RESPONSIBLE CARE®
OUR COMMITMENT TO SUSTAINABILITY

CONFIRMATORY PERFORMANCE TEST PLAN
FOR
THE ROTARY KILN INCINERATORS (RKIs)

Prepared for:

Tennessee Operations
Eastman Chemical Company
Kingsport, TN

Prepared by:

Franklin Engineering Group, Inc.
Franklin, TN

SEPTEMBER 2020

TABLE OF CONTENTS

1.0 INTRODUCTION AND BACKGROUND 1
2.0 PROCESS DESCRIPTION SUMMARY 3
2.1 Automatic Waste Feed Cutoff System 5
3.0 CONFIRMATORY PERFORMANCE TEST OBJECTIVES SUMMARY 6
3.1 Emissions Performance Objectives 6
3.2 Confirmatory Performance Test Protocol Summary 6
3.3 Request to Use Method 23 to Measure Dioxin/Furan Emissions 7
3.4 Request to Use EPA Approved Method 23 Modifications (ALT-052) 8
3.5 Waiver of Performance Testing for One Kiln 10
4.0 DETERMINATION OF NORMAL OPERATING CONDITIONS 11
4.1 Normal Unit Operating Conditions 13
4.2 Normal Hydrocarbon Operating Level 13
4.3 Normal Chlorine Feedrate 14
4.4 Planned Air Pollution Control System Operating Conditions 14
5.0 CONFIRMATORY PERFORMANCE TEST PROTOCOL 15
5.1 Waste Feed Selection 15
5.2 Chlorine Feedrate 16
6.0 SAMPLING AND ANALYSIS 17
6.1 Sampling and Monitoring Locations and Frequencies 17
6.2 Sampling and Monitoring Methods 19
6.2.1 Stack Gas Sampling Methods 19
6.2.2 Process and Spike Sampling Methods 20
6.3 Sample Handling and Custody 21
6.4 Analytical Procedures 21
6.5 Quality Assurance / Quality Control Program 21
6.6 Process Data Collection and Calculation 22
7.0 CONFIRMATORY PERFORMANCE TEST SCHEDULE AND ORGANIZATION 24
7.1 Test Schedule 24
7.2 Organization 24
8.0 CONFIRMATORY PERFORMANCE TEST REPORT CONTENTS 28

LIST OF TABLES

Table 1-1 Confirmatory Performance Test Plan Regulatory Requirements 2
Table 3-1 Historical Dioxin and Furan Emission Results 9
Table 4-1 Confirmatory Performance Test Operating Conditions 12
Table 6-1 Confirmatory Performance Test Stack Gas Sampling 18
Table 7-1 Test Schedule 25

LIST OF FIGURES

Figure 7-1 Test Organization Chart 26

1.0 INTRODUCTION AND BACKGROUND

On October 12, 2005, the Environmental Protection Agency (EPA) promulgated "Final Standards for Hazardous Air Pollutants for Hazardous Waste Combustors; Final Rule" (Federal Register, Vol. 70, No. 196, October 12, 2005, pp. 59402 and ff.). Among other things, this rule established final MACT emission standards for hazardous waste incinerators. Facilities were required to comply with the final standards by October 14, 2008, unless an extension of the compliance date was granted.

The Tennessee Operations of Eastman Chemical Company (Eastman) owns and operates two rotary kiln incinerators (RKIs) and one liquid chemical destructor (LCD) incinerator which are subject to 40 CFR, Part 63, Subpart EEE (HWC MACT). Eastman conducted a periodic Comprehensive Performance Test for the RKIs on October 24 and 25, 2018, as required by §63.1207(b)(1). In accordance with §63.1210(d), Eastman submitted a Notification of Compliance (NOC), including results of the Comprehensive Performance Test, to the Tennessee Division of Air Pollution Control (TDAPC) and Tennessee Division of Solid Waste Management (TDSWM) on January 22, 2019. Results of the Comprehensive Performance Test demonstrated that Eastman's RKIs met the applicable final emission standards under HWC MACT.

This Confirmatory Performance Test Plan is submitted to fulfill the requirements of §63.1207(e) for Eastman’s RKIs. The purposes of this plan are to define the test conditions that will be used to demonstrate compliance with the dioxin/furan emission standards and to provide notice of Eastman's intent to conduct a Confirmatory Performance Test. The Confirmatory Performance Test Plan also describes the sampling and analysis methods that will be used to demonstrate compliance with the dioxin/furan emission standards for existing hazardous waste incinerators specified in §63.1219(a)(1)(ii).

This Confirmatory Performance Test plan contains the information prescribed in §63.1207(f). Table 1-1 presents the regulatory references for content of the Confirmatory Performance Test Plan and the section of this plan that addresses the specific requirement. The Quality Assurance Project Plan (QAPP) for the Confirmatory Performance Test is included in the appendices to this Confirmatory Performance Test plan.

One of the requirements associated with the Confirmatory Performance Test for demonstrating compliance with the HWC MACT standards is a Continuous Monitoring System (CMS) Performance Evaluation Test (PET) Plan. This plan is a stand-alone document included with this submittal.

Table 1-1
Confirmatory Performance Test Plan Regulatory Requirements

40 CFR Citation	Description	Test Plan Section
63.7(c)(2)(i)	1.Test program summary 2.Test schedule 3.Data quality objectives 4.Internal & external QA program	Section 3.0 Section 7.1 Appendix I Appendix I
63.8(e)(3)(i)	Continuous Monitoring System (CMS) Performance Evaluation Test Plan	a
63.1207(f)(2)(i)	A description of the normal hydrocarbon or carbon monoxide operating level	Section 4.2
63.1207(f)(2)(ii)	A description of the normal applicable operating parameter levels	Section 4.1
63.1207(f)(2)(iii)	A description of the normal chlorine operating levels	Section 4.3
63.1207(f)(2)(iv)	Not applicable	
63.1207(f)(2)(v)	A detailed description of sampling and monitoring procedures	Section 6.0
63.1207(f)(2)(vi)	A detailed test schedule	Section 7.1
63.1207(f)(2)(vii)	A detailed test protocol including the ranges of hazardous waste feedrate and the feedrates of other fuels	Section 5.0
63.1207(f)(2)(viii)	A description of, and planned operating conditions for, any emission control equipment	Section 2.0 Section 4.4
63.1207(f)(2)(ix)	Procedures for rapidly stopping the hazardous waste feed and controlling emissions in the event of an equipment malfunction	Section 2.1
63.1207(f)(2)(x)	Not applicable	

Notes:

[a] The Continuous Monitoring System (CMS) Performance Evaluation Test (PET) Plan is a standalone document submitted in conjunction with this test plan.

2.0 PROCESS DESCRIPTION SUMMARY

Hazardous and non-hazardous waste liquids and solids are treated in Eastman's rotary kiln incinerators (RKIs). Each RKI consists of the following systems:

- Waste receiving and storage system (common to both kilns)
- Waste feed system
- Combustion system
- Air pollution control system (APCS)
- Instrumentation and control system
- Automatic waste feed cutoff system (AWFCO)
- Continuous emissions monitoring system (CEMS)

Waste liquids are received for incineration in either tanker trailers or dumpsters. These liquids can be fed to the unit directly from the trailers or dumpsters or can be transferred to waste feed tanks for storage. The waste feedrate in each feed line is monitored by a flowmeter and regulated by means of a control valve.

Wastes are fed to the kiln through any of three feed nozzles. Auxiliary fuel can be fed to a dedicated burner for supplemental thermal input. Combustion air is fed to the chamber as forced air. Combustion gases are withdrawn by an induced draft fan. Solid wastes are fed in containers via a dedicated system of roller conveyors through dedicated airlocks located at the entrance of each kiln.

The primary combustion chamber is a horizontal, cylindrical, rotating, refractory-lined chamber. The combustion chamber is operated under a vacuum (draft) below atmospheric pressure. The resulting combustion gas exits the combustion chamber through a refractory-lined duct and enters the air pollution control system (APCS).

Solid residue (ash) exits at the discharge of the kiln through the refractory-lined breeching into a hopper, where the ash is quenched in a water bath. The ash is discharged from the water bath to the ash flume. The flume transports the ash by gravity to the ash tank where it is staged prior to storage.

The purpose of the APCS is to remove pollutants such as particulate matter, metals, and acid gas from the combustion gas stream. The APCS consists of the following components:

- Secondary Combustion Chamber (SCC)

- Quench chamber
- Condensing multi-rod scrubber
- Two wet electrostatic precipitators (WESPs) in series, each preceded by an irrigated marble bed
- Induced draft (ID) fan

Combustion gas exits the kilns and passes into the SCC. The purpose of the SCC is to provide residence time to support complete combustion. Relatively high BTU (>5,000 BTU/pound) waste liquids can be fed to the SCC for combustion through any of four burners arranged in a concentric manner around the SCC. Fuel oil can be fed to two of these burners as supplemental fuel. Combustion and secondary air is forced into the SCC through blowers.

Hot combustion gas enters the quench chamber where it is cooled by water sprays to adiabatic saturation temperature. The saturated gas enters the multi-rod scrubber and flows upward through a series of rod decks. Each deck consists of closely spaced rods. Recirculation water flows downward through the chamber and creates a froth layer at each of the rod decks. As the gas flows upward through this froth layer, acids and large particles are removed by absorption and inertial impaction. The recirculation water is cooled in a plate and frame heat exchanger and provides direct contact cooling of the gas. The gas is subcooled, causing condensation of excess water vapor. The subcooling and condensation decrease the volumetric flowrate of gas and create flux force/condensation scrubbing effects. These effects result in particle growth, making particles easier to remove in the downstream marble bed/WESP control devices.

Saturated gas exits the multi-rod scrubber and enters the bottom of the first of two WESPs in series. The gas flows upward through a distribution bed consisting of a layer of marbles. Recirculation water is sprayed upward onto the marble bed, creating a froth zone immediately above the bed. The marble bed provides even distribution of the gas before it enters the electrode tubes. The gas-liquid contact in the marble bed also provides additional surface area for acid gas absorption and particle removal via inertial impaction.

Gas exits the marble bed and flows upward through a set of parallel electrode tubes. A charging electrode suspended in the center of each tube ionizes the gas stream, which in turn charges the suspended particles. The charged particles are attracted to the wall of the tube, which acts as a collecting electrode. The captured particles are removed from the tube walls by the flushing action of condensing water vapor and by periodic backwashing. Prior to backwashing events, hazardous waste burning is suspended and the power supply to the charging electrodes is de-energized.

The gas exits the first WESP and enters a second, identical marble bed/WESP that provides an additional level of particulate removal. The cleaned gas exits the second WESP and is drawn through a variable speed ID fan, which provides the motive force throughout the APCS and combustion system. The ID fan exhausts to a stack.

The concentrations of total hydrocarbons (THC) and oxygen (O_2) in the stack gas are continuously monitored and recorded by a continuous emissions monitoring system (CEMS).

2.1 Automatic Waste Feed Cutoff System

The RKIs are equipped with a distributed control system (DCS) that is tied to field instruments and controls. The DCS provides for monitoring and control of process parameters. An automatic waste feed cutoff (AWFCO) system is integral to the DCS. The AWFCO system stops hazardous waste feeds should an operating parameter approach or reach its respective operating parameter limit (OPL) and prevents restart of those waste feeds until the parameter is within the acceptable operating range. During startup, the AWFCO system prevents the initiation of hazardous waste feeds until the unit is within appropriate operating range.

When an AWFCO event is initiated, combustion chamber temperature will be maintained through the use of auxiliary fuel and/or nonhazardous waste. All AWFCO events are recorded in the facility operating record. An AWFCO event is initiated in the following manner.

- An alarm will be activated at a level below the OPL in the case of a maximum limit or above the OPL in the case of a minimum operating condition. This alarm indicates that the system is approaching a regulatory interlock point.
- At this point, the operator will review the situation and take action to correct the situation, up to and including a manual shutdown of the affected system.
- If the corrective actions taken are not effective, and the operating parameter exceeds the OPL, an AWFCO is initiated.

All AWFCOs will be active during the Confirmatory Performance Test.

3.0 CONFIRMATORY PERFORMANCE TEST OBJECTIVES SUMMARY

Sections 5.0, 6.0, and 7.0 provide details of the Confirmatory Performance Test Plan for the RKIs. The plan outlines a testing program for demonstrating the unit's compliance with the dioxin/furan emission standard promulgated in the Final Standards for Hazardous Air Pollutants for Hazardous Waste Combustors, 40 CFR, Part 63, Subpart EEE.

3.1 Emissions Performance Objectives

The emissions performance objectives of the Confirmatory Performance Test are as follows.

- Demonstrate that under normal operating conditions, the unit's dioxin/furan emissions are less than the standard for existing hazardous waste incinerators maximum allowable emissions limit of 0.40 ng toxic equivalent quotient to 2,3,7,8-TCDD (TEQ) /dscm.
- Evaluate performance of continuous monitoring systems (CMS) required for compliance with the dioxin/furan emission standard.

Products of incomplete combustion, measured as total hydrocarbon (THC) as propane, will be monitored during the test. This Confirmatory Performance Test plan does not include demonstration of compliance with the carbon monoxide (CO) emission standard because Eastman has chosen to comply with the THC standard instead, as provided by §63.1219(a)(5)(ii).

3.2 Confirmatory Performance Test Protocol Summary

The Confirmatory Performance Test will be conducted under normal operating conditions that simulate normal emissions of PCDD/PCDF and total hydrocarbons. The Confirmatory Performance Test will be conducted under the following operating conditions:

- Above average gas flow rate;
- Above average hazardous waste feedrate;
- Normal chlorine feedrate or greater; and
- Below average combustion temperature.

The Confirmatory Performance Test for the RKIs will consist of one test condition, with three replicate runs. Wastes typical of those normally combusted in the RKIs will be fed during the test, with the addition of a chlorine spike. The Confirmatory Performance Test protocol is discussed in detail in Section 5.0.

As agreed to in the approval of the RKI Comprehensive Performance Test Plan dated February 4, 2008, the Confirmatory Performance Test will be conducted using the normal Kiln-Only operating

condition. For the Kiln-Only condition, waste is only introduced in the kiln, rather than a combination of the kiln and SCC. A historical comparison of the dioxin/furan emissions with and without waste introduced in the SCC (see Notification of Compliance Status (NOCS) Report for Rotary Kiln No. 1 submitted September 24, 2003, Table VI-1) reveals that neither condition is conducive to dioxin/furan formation and that the presence or absence of waste introduced in the SCC has only a minor impact on dioxin/furan formation.

3.3 Request to Use Method 23 to Measure Dioxin/Furan Emissions

The HWC MACT rule at 40 CFR 63.1208(b)(1) requires that EPA SW-846 Method 0023A, or after approval by the Administrator, Method 23 (40 CFR Part 60, appendix A) be used to determine compliance with the emission standard for dioxins and furans. 40 CFR 63.1208(b)(1)(i)(B)(1) specifies that the request to use Method 23 rather than Method 0023A is to be included in the performance test plan. Eastman requests approval to use Method 23 when it conducts the RKI Confirmatory Performance Test.

Method 0023A requires separate recovery and analysis of the front and back-half catches whereas the two catches are recovered together before analysis in Method 23. In some instances it is believed that the enhanced procedures of Method 0023A can result in increased measurement accuracy. However, the analytical costs associated with Method 0023A are higher than for Method 23 and EPA has recognized that Method 0023A does not result in improved accuracy in all cases. Additionally, the improved accuracy that may be achieved with Method 0023A, compared to that achieved by Method 23, is not necessarily needed if emissions are lower than the applicable emission standard. Accordingly, EPA has included the provision in 40 CFR 63.1208(b)(1)(i)(B) to request use of Method 23. In preamble language (see (Federal Register, Vol. 70, No. 196, October 12, 2005, pp. 59497, and ff.) EPA lists the following factors to be considered when proposing the use of Method 23:

1. Whether previous Method 0023A analyses document that dioxin/furan are not detected, are detected at low levels in the front half of Method 0023A, *or are detected at levels well below the emission standard* (emphasis added), and
2. Whether the design and operation of the combustor has not changed in a manner that could increase dioxin/furan emissions.

In November 2001, Eastman conducted a Resource Conservation and Recovery Act (RCRA) mini-trial burn on RKI-1 to demonstrate compliance with the February 13, 2002 Interim Subpart EEE dioxin and furan emission standard. Eastman used Method 0023A in this testing. Results were reported to TDEC and TDSWM on September 24, 2003 in the RKI NOC submittal. Results

demonstrated that dioxin and furan emissions from the RKIs were well below the HWC MACT emission limit. The average measured PCDD/PCDF emissions were <0.014 ng TEQ/dscm corrected to 7% oxygen as compared to the HWC MACT emission limit of 0.40 ng TEQ/dscm corrected to 7% oxygen.

Eastman conducted subsequent Comprehensive Performance Tests in 2008, 2013, and 2018, as well as Confirmatory Performance Tests in 2010 and 2015, to demonstrate compliance with the final Subpart EEE dioxin and furan emission standard. Eastman requested and was granted permission to use Method 23 during these Performance Tests. Results were reported in test reports submitted to TDEC and TDSWM and are summarized in Table 3-1. Results demonstrated that dioxin and furan emissions from the RKIs continue to be well below the HWC MACT emission limit.

No changes in equipment, operations or feeds have occurred since the most recent Comprehensive Performance Test that would affect dioxin and furan emissions. Given the very low measured emissions under worst-case operating conditions in the 2008, 2013, and 2018 Comprehensive Performance Tests and the 2010 and 2015 Confirmatory Performance Tests, the potential additional measurement accuracy for Method 0023A (compared to that achieved with Method 23) is not needed to demonstrate compliance with the emission limit. Further, the additional analytical cost of using Method 0023A is not justified. Therefore, Eastman again requests approval to use Method 23. Eastman requests that such approval provide that Eastman may conduct the Confirmatory Performance Test using Method 23 without revision and re-submittal of this test plan. If approval is granted and Eastman uses Method 23 during the Confirmatory Performance Test, that deviation from the plan will be noted in the Confirmatory Performance Test report.

3.4 Request to Use EPA Approved Method 23 Modifications (ALT-052)

Eastman requests approval to use EPA approved Method 23 modification for incinerators and waste combustors (ALT-052). Pending approval, the sample recovery procedure in Method 23 will be modified by using only acetone and toluene as the recovery solvents, instead of using acetone, methylene chloride and toluene as specified in the method. In addition, the acetone and toluene rinses (both front half and back half), filter, and XAD-2 trap will be combined into one sample prior to extraction and analysis instead of analyzing the toluene rinse separately as required by the method.

Table 3-1
Historical Dioxin and Furan Emission Results

Test Event	Test Results [a] ng TEQ/dscm, 7% O2
2008 Comprehensive Performance Test	0.014
2010 Confirmatory Performance Test	0.0066
2013 Comprehensive Performance Test	0.03
2015 Confirmatory Performance Test	0.00313
2018 Comprehensive Performance Test	<0.01

Notes:

[a] TEQ is toxic equivalent quotient to 2,3,7,8-TCDD. The results presented represent the theoretical worst-case emissions.

EPA Method 23 quality assurance data have demonstrated that toluene recovery rinses are as effective as methylene chloride rinses and do not significantly change the amount of dioxins and furans recovered from the sampling equipment. Therefore, toluene will be substituted for methylene chloride recovery solvent in EPA Method 23. Because toluene will be used in place of methylene chloride, there is no need to analyze the toluene rinse separately, and the toluene rinse may be combined with the other sample fractions prior to extraction and analysis.

If approval is granted and Eastman uses these EPA Approved Method 23 modifications during the Confirmatory Performance Test, the use of the alternative method will be noted in the Confirmatory Performance Test report.

3.5 Waiver of Performance Testing for One Kiln

In section III.A of the August 12, 2002 data-in-lieu submittal, Eastman provided rationale for testing only one of the two rotary kilns since they are identical in design, capacity, wastes and fuels burned, operations, etc. Upon approval of the data-in-lieu request, data from the mini-trial burn conducted on RKI-1 were used to establish subpart EEE operating limits for both RKI-1 and RKI-2. Additionally, data from the Comprehensive Performance Tests conducted on RKI-1 in October 2008, October 2013, and October 2018 were used to establish subpart EEE operating limits for both RKI-1 and RKI-2 with agency approval. Both kilns are located at the same facility and are of the same design, operation and rated capacity. Additionally, emission levels demonstrated during emissions testing show that these units operate well below applicable subpart EEE emission limits.

Eastman plans to conduct the Confirmatory Performance Test according to this plan on only one kiln. The kiln tested will be selected at the time of testing based on operational needs and availability. Data generated from the kiln tested will be used to demonstrate compliance with the dioxin/furan emission standard for both kilns.

4.0 DETERMINATION OF NORMAL OPERATING CONDITIONS

As mentioned in Section 3.0, one of the objectives of the Confirmatory Performance Test is to demonstrate that dioxin/furan emissions are lower than the HWC MACT emission standard while the unit is subjected to normal operating conditions. Consistent with §63.1209(k), the following operating parameter limits (OPL) are required specifically to assure compliance with the PCDD/PCDF emission standard:

- Minimum combustion chamber temperature,
- Maximum flue gas flowrate or production rate, and
- Maximum hazardous waste feedrate

These parameters are monitored using continuous parameter monitoring systems (CPMS) as required by HWC MACT. To achieve the objectives of the Confirmatory Performance Test, normal operating parameters for the above OPLs were established.

Eastman elected to determine the average applicable operating limits from data collected from August 1, 2019 through July 31, 2020. This 12-month time range was used to determine the average values indicative of normal operating conditions.

Table 4-1 provides a summary of operating limits which directly impact the dioxin/furan emissions from the unit. The maximum or minimum permitted limits, as appropriate, are included in the table for reference.

The test condition represents normal potential for the formation of PCDD/PCDF. Above average combustion gas flowrate represents decreased residence time in the combustion chamber, which may lessen the destruction of organic compounds, as well as decreasing the time that the APCS will have to act on the pollutants. Above average hazardous waste feedrate will increase the potential emissions of these pollutants. The reduced combustion temperature may limit the combustion of organics.

Normal operating conditions for chlorine feedrate and total hydrocarbon (THC) during the test are discussed later on in this section.

Table 4-1
Confirmatory Performance Test Operating Conditions

Operating Parameter	Units	Operating Parameter Limit [a]	Average Value [b]
Minimum Kiln Outlet Temperature	°F	1,621 [c]	1,842
Maximum Combustion Gas Flowrate	dscfm	21,876 [c]	19,109
Maximum Pumpable Hazardous Waste Feedrate	lb/hr	7,090 [c]	1,969
Maximum Total Hazardous Waste Feedrate	lb/hr	9,437 [c]	2,320
Maximum Stack Gas Total Hydrocarbon (THC) Concentration	ppmv, 7% O_2, dry basis	10	0 [d]
Maximum Total Chlorine Feedrate	lb/hr	553	16

Notes:

[a] As reported in Comprehensive Performance Test Report and Notification of Compliance for the RKIs submitted January 22, 2019; intended for reference only.

[b] Average values for parameters at Kilns 1 and 2 from August 1, 2019 – July 31, 2020.

[c] As applicable to Kiln-Only mode..

[d] The average value recorded in the data archiving system was below the minimum required accuracy of the CEMS.

4.1 Normal Unit Operating Conditions

The operating data for both RKIs were reviewed and filtered to determine the normal operating limits as required under §63.1207(g)(2)(ii):

> *Each operating limit (specified in §63.1209) established to maintain compliance with the dioxin/furan emission standard must be held within the range of the average value over the previous 12 months and the maximum or minimum, as appropriate, that is allowed, except as provided by paragraph (g)(2)(v) of this section. The average value is defined as the sum of the rolling average values recorded over the previous 12 months, divided by the number of rolling averages recorded during that time. The average value must not include calibration data, startup data, shutdown data, malfunction data, and data obtained when not burning hazardous waste.*

Data filtering identified a total of 666,360 minutes (counting both kilns) during the 12-month time range when the requirements were met for data to be included in identifying the operating limit average values. Semi-annual reports were used to confirm that periods of parameter exceedance during startup, shutdown, or malfunction were properly excluded. However, this does include periods of CEMS calibration during normal hazardous waste treatment (does not include calibration data).

The calculated average values for each operating limit established for dioxin/furan emission control have been included in Table 4-1. During the test, the operating limits will be maintained within the range of the average value and the permit limit, as far as practicable.

4.2 Normal Hydrocarbon Operating Level

Eastman continuously monitors THC as propane emissions rather than CO, as provided by §63.1219(a)(5). The operating data for both RKIs were reviewed and filtered to determine the normal operating level of THC emissions as required under §63.1207(g)(2)(i):

> *Carbon monoxide (or hydrocarbon) CEMS emissions levels must be within the range of the average value to the maximum value allowed, except as provided by paragraph (g)(2)(v) of this section. The average value is defined as the sum of the hourly rolling average values recorded (each minute) over the previous 12 months, divided by the number of rolling averages recorded during that time. The average value must not include calibration data, startup data, shutdown data, malfunction data, and data obtained when not burning hazardous waste.*

The data identified for normal operating limits were further filtered to exclude CEMS calibration during hazardous waste combustion, as provided under the Appendix to Subpart 63 (6.2).

The calculated average value for THC as propane emissions has been included in Table 4-1. During the test, the THC emissions will be maintained within the range of the average value and the permit limit, as far as practicable.

4.3 Normal Chlorine Feedrate

The operating data for the RKIs were reviewed and filtered to determine the normal operating level of chlorine feedrate as required under §63.1207(g)(2)(iii):

You must feed chlorine at normal feedrates or greater.

Due to the ambiguity of the regulations regarding the calculation of a normal chlorine feedrate, the following method was employed.

While the other OPLs discussed in this section are calculated on a 1-hour rolling average basis, the chlorine feedrate standard is calculated on a 12-hour rolling average basis. Therefore, the average value was calculated as the arithmetic average of the 12-hour rolling averages recorded during the 12 month time period. Consistent with other average values calculated in this test plan, periods of calibration, startup, shutdown, malfunction, and data obtained when not burning hazardous waste were excluded from the calculation.

The same data set used to calculate average values for combustion gas flow, combustion temperature, and hazardous waste feedrate was also used to calculate the average chlorine feedrate.

The calculated average for chlorine feedrate has been included in Table 4-1. During the test, the chlorine feedrate will be maintained within the range of the average value and the permit limit, as far as practicable. During the Confirmatory Performance Test, chlorine will be spiked into the waste feeds as discussed in Section 5.1.

4.4 Planned Air Pollution Control System Operating Conditions

A brief summary of the RKI Air Pollution Control System (APCS) is included in Section 2.0 of this test plan. With the exception of the combustion gas flowrate addressed in Section 4.1, the APCS operating conditions are not constrained by testing requirements. While the APCS must be operated within the permitted limits, no further restrictions are applicable.

5.0 CONFIRMATORY PERFORMANCE TEST PROTOCOL

The purpose of this section of the Confirmatory Performance Test Plan is to describe in detail the protocol for the test. The Confirmatory Performance Test for the RKIs will consist of one test condition with three replicate runs. The Confirmatory Performance Test will be conducted under normal test conditions that simulate the normal potential for emissions of the pollutants of concern. As with previous performance tests, testing will be performed on only one rotary kiln incinerator. Data generated during that test will be used to demonstrate compliance with applicable emission standards for both RKIs.

The Confirmatory Performance Test condition represents the normal conditions for emissions of PCDD/PCDF and total hydrocarbons.

The Confirmatory Performance Test will be conducted under the following operating conditions:

- Above average gas flow rate;
- Above average hazardous waste feedrate;
- Normal chlorine feedrate or greater; and
- Below average combustion temperature

Above average combustion gas flowrate increases the potential for emission of all pollutants. This condition represents decreased residence time in the combustion chamber, which may lessen the destruction of organic compounds, as well as decreases time that the APCS will have to act on the pollutants. Above average hazardous waste feedrate increases the potential for emission of these pollutants. Normal feedrate of chlorine will allow the potential for dioxin/furan emissions. The reduced combustion temperature may limit the combustion of organics. The combination of normal chlorine feedrate or greater and below average combustion temperature increases the potential for the formation of PCDD/PCDF.

5.1 Waste Feed Selection

The liquid wastes selected for use during the Confirmatory Performance Test include wastes that are routinely incinerated in the RKI, with the exception of a chlorine spike. These waste streams are representative of the typical wastes disposed of at the RKIs. The use of these wastes will be determined based on operational discretion at the time of the test. It may be necessary to substitute wastes or to vary the waste feedrate if sufficient quantities of the listed wastes are not available at the time of the test. Descriptions of all waste treated in the RKI during the test will be included in the Confirmatory Performance Test Report. No solid waste (i.e., containerized waste) will be fed during the test.

In order to ensure a normal chlorine feedrate or greater, Eastman has chosen to use a chlorine spike during testing. Alternate fuel may be fed to the RKI during the test to meet testing requirements.

5.2 Chlorine Feedrate

The chlorine target feedrate for the Confirmatory Performance Test will be approximately 20 lb/hr, which is representative of normal chlorine feedrates or greater. Eastman has chosen to feed a chlorine spike to the unit during testing in order to meet the required chlorine feedrate. It is anticipated that the only significant sources of the chlorine fed to the unit during the test will be introduced via the chlorine spike. However, Eastman plans to sample each waste stream at the start and end of each run. Samples will be archived in the event of a test anomaly or if an adequate chlorine feedrate cannot be established.

6.0 Sampling and Analysis

The Confirmatory Performance Test sampling and analysis program is structured as a single test condition that will provide the necessary information for demonstrating that performance criteria are achieved at the target process conditions. Sampling locations and testing periods are indicated in this section. The procedures referenced in this section are described in the Quality Assurance Project Plan (QAPP) in Appendix I.

Streams to be sampled and analyzed during the Confirmatory Performance Test include waste feed streams and the stack gas.

6.1 Sampling and Monitoring Locations and Frequencies

The Confirmatory Performance Test sampling and analytical program for stack gas emissions is presented in Table 6-1. Stack gas sampling will be performed at existing sample ports. A diagram of the sampling locations for stack gas emissions has been included in the Quality Assurance Project Plan (QAPP) as Figure 4-1. Sampling of stack gas will span the duration of each run.

The samples taken during the Confirmatory Performance Test will only be analyzed if questionable results are obtained after analysis of the test data. Sampling of liquid streams will occur at the following locations and frequencies:

- All liquid waste feed streams and alternate fuel will be sampled at the start and end of each run. Samples will be taken from taps in feed lines to each burner. Alternatively, wastes may be unloaded to dedicated tanks and sampled prior to the start of the test from a bleed line located between the tank and the suction side of the pump.

- The chlorine spike will be sampled at the start and end of each run from taps in the feed line to the burner. A Certificate of Formulation (COF) will be used in lieu of analysis of the liquid chlorine spike. Samples of the chlorine spike will be collected and archived for future analysis, if needed.

Table 6-1
Confirmatory Performance Test Stack Gas Sampling

Sampling Method	Number of Sampling Runs	Sampling Time per Run (hours)	Analytical Parameters	Analytical Method [a]
Method 1	N/A	N/A	Sampling and Traverse Point Locations	Method 1
Method 2	3	3	Volumetric Flowrate	Method 2
Method 3	3	3	Molecular Weight	Method 3 or 3A
Method 4	3	3	Moisture	Method 4
Method 23/ALT-052 [b]	3	3	PCDD/PCDF	Method 23[1]
CEMS	3	Continuous	O_2	O_2 CEMS
			THC	THC CEMS

Notes:

[a] Methods are from 40 CFR 60 Appendix A or US EPA SW-846. The analytical method listed, or an equivalent method, will be used during the Confirmatory Performance Test.

[b] Pending agency approval of request to use Method 23 and ALT-052 rather than SW-846 Methods 0023A/8290 (see Section 3.3).

6.2 Sampling and Monitoring Methods

6.2.1 Stack Gas Sampling Methods

Stack gas sampling will be conducted using EPA recommended sampling trains. Sampling for PCDD/PCDF will be conducted using the following sampling methods.

<u>EPA Method 23 (PCDD/PCDF)</u>

The sampling and analytical procedures outlined in EPA Method 23 will be used to collect samples for determination of selected Polychlorinated dibenzo-(p)-dioxin and dibenzofuran concentrations. Using this method, stack gas emissions are withdrawn from each sampling point at an isokinetic sampling rate, and are collected in the sample probe, on a glass fiber filter, and on a packed column of adsorbent. The polychlorinated dibenzo-p-dioxins and furans, once extracted from the sample, are separated using high-resolution gas chromatography and are measured using high-resolution mass spectrometry. This train will be operated for a minimum of 3 hours per run.

Other EPA methods will be used to determine proper sampling/traverse points, flue gas velocity and volumetric flow rate, flue gas composition and molecular weight, and flue gas moisture content. Data from continuous emission monitoring systems (CEMS) will be collected for total hydrocarbons (THC) and oxygen (O_2). The methods used for these determinations are as follows.

<u>EPA Method 1 (Sampling Point Determination)</u>

The number and location of the traverse points in the stack will be determined according to the procedures outlined in EPA Method 1.

<u>EPA Method 2 (Flue Gas Velocity and Volumetric Flowrate)</u>

The flue gas velocity and volumetric flow rate will be determined according to the procedures outlined in EPA Method 2. Velocity measurements will be made using Type S pitot tubes conforming to the geometric specifications outlined in the method. Differential pressures will be measured with fluid manometers of the appropriate range. Effluent gas temperatures will be measured with chromel-alumel thermocouples equipped with a digital temperature indicator.

<u>EPA Method 3 or 3A (Flue Gas Composition and Molecular Weight)</u>

EPA Method 3 will be used to determine the dry molecular weight of the flue gas stream. One integrated sample will be collected in a flexible bag for each test run using the procedures of Method 3. The carbon dioxide concentration in the sample will be determined using an Orsat, or as an alternative, Method 3A (instrumental analyzer method) may be used for analysis of the sample. The oxygen concentration in the flue gas stream will be determined from the continuous

emissions monitoring system (CEMS), which will operate continuously throughout the duration of each run.

EPA Method 4 (Flue Gas Moisture Content)

The flue gas moisture content will be determined in conjunction with the EPA Method 23 sampling train according to the procedures outlined in EPA Method 4. The impingers will be connected in series and will contain the reagents necessary for the train. The impingers will be surrounded by an ice bath to ensure condensation of moisture in the stack gas sample. Any moisture that is not condensed in the impingers is captured in silica gel. For determination of total moisture in the stack gas, the moisture condensed in the impingers and captured in the silica gel will be weighed, summed, and entered into moisture content calculations.

Oxygen (O_2) – Installed CEMS

The permanently installed continuous emissions monitoring system (CEMS) will be used to measure stack gas concentrations of oxygen (O_2). The monitor will operate continuously throughout the duration of each run. Measured O_2 concentrations will be used to correct pollutant emission levels to 7% O_2, as applicable, and to determine flue gas composition and molecular weight.

Total Hydrocarbons (THC) – Installed CEMS

The permanently installed continuous emissions monitoring system (CEMS) will be used to measure stack gas concentrations of total hydrocarbons (THC). The monitor will operate continuously throughout the duration of each run.

6.2.2 Process and Spike Sampling Methods

The following paragraphs describe the process and spike sampling, as it will be conducted for each stream.

Waste Feed Sampling

All liquid waste feeds will be sampled using a method similar to the Tap sampling method at locations described in section 6.1.

Spiking Material Sampling

The chlorine spike will be sampled using a method similar to the Tap sampling method at locations described in section 6.1.

6.3 Sample Handling and Custody

Samples will be labeled with a unique alphanumeric sample identification code using indelible ink, or labels pre-printed with the sample codes will be used. All sampling data, including information regarding sampling times, locations, and any specific considerations associated with sample acquisition, will be recorded on pre-formatted data sheets or on the appropriate chain of custody sheet. Samples that are collected during testing will be packed for transport to the appropriate laboratories, and chain of custody forms will be included for the samples in each shipment box. Samples requiring cold storage will be placed on ice for transport. These samples will be stored at 4°C until analyzed. Chain-of-custody forms will be completed for all samples and will accompany the samples during transportation to the laboratory. The laboratory will then maintain internal custody according to the laboratory's QC program.

Additional information on sample handling and custody procedures, along with other quality assurance/quality control procedures, are presented in the QAPP.

6.4 Analytical Procedures

The analyses planned for the Confirmatory Performance Test are summarized in Tables 6-1. The analytical procedures and reference methods for these analyses are located in the QAPP in Appendix I.

The only outlet stream to be analyzed is the stack gas. The exhaust gas will be analyzed to determine PCDD/PCDF emissions, as well as total hydrocarbon and oxygen concentrations.

Total chlorine analyses may be required to demonstrate normal, or greater, chlorine feedrate during the test. The inlet streams include waste materials, alternate fuel, and chlorine spiking material. Only waste used to demonstrate the required chlorine feedrate during the test will be analyzed to determine total chlorine/chloride content. A Certificate of Formulation (COF) will be used in lieu of analysis of the chlorine spiking materials. Samples of the chlorine spike collected during the test runs will be archived for potential future analysis.

6.5 Quality Assurance / Quality Control Program

The Quality Assurance Project Plan (QAPP) is presented in Appendix I. The QAPP describes procedures that will be implemented to ensure the quality of the data acquired during implementation of the Confirmatory Performance Test plan. The format and procedures define the Confirmatory Performance Test management organization, QA objectives, calibration procedures, sample custody, QC checks, performance and system audits, along with data

reduction, validation and reporting. The plan supplements and defines QA procedures for the sampling, analysis and monitoring procedures that are discussed in the previous sections.

6.6 Process Data Collection and Calculation

Data are recorded in the incinerator operating history database in the following manner.

For parameters with operating limits established as rolling hourly averages or twelve-hour rolling averages, the minute average value shall be permanently recorded as well as the appropriate hourly or twelve-hour rolling hourly average. The minute average is the average of detector responses calculated at least every 60 seconds from responses obtained at least every 15 seconds. Minute average data shall be recorded for the following parameters:

a. Combustion chamber outlet temperature in degrees °F;
b. Stack gas THC as propane concentration in ppm, corrected to 7% O_2 on a dry basis;
c. Combustion gas flowrate as dry standard cubic feet per minute;
d. Total hazardous waste feed rate in pounds per hour; and
e. Chlorine feed rate in pounds per hour.

The calculation methodology for these parameters is summarized below. With the exception of chlorine feedrate, the calculation methodologies are identical to those used for ongoing compliance.

<u>Combustion Chamber Outlet Temperature</u>

The temperature of the combustion gas is directly monitored by permanently installed thermocouples located near the combustion chamber outlet.

<u>Total Hazardous Waste Feedrate</u>

Waste feedrates will be directly measured by the permanently installed flowmeters in the waste feed lines and recorded by the Distributive Control System (DCS). The hazardous waste feedrate OPL will be calculated as the sum of the waste feedrates.

<u>Chlorine Feedrate</u>

The chlorine concentration in selected feed streams will be used to determine that normal or greater chlorine feedrates were attained during the test. The chlorine concentration data, per the sampling and analysis plan discussed in this section, and the applicable feedrate data will be utilized to determine the average chlorine feedrate during the test.

Combustion Gas Flowrate and THC as Propane Concentration

Stack gas flowrate is measured on a wet volumetric basis downstream of WESP #2 and prior to the ID Fan. Dry stack gas flowrate is continuously calculated by the DCS from the wet volumetric flowrate, with the correction for moisture made by assuming saturated conditions at the temperature and pressure of the combustion gas downstream of WESP #2 and prior to the ID Fan.

The THC as propane and oxygen concentrations in the stack gas are measured by permanently installed continuous emissions monitoring systems (CEMS).

7.0 CONFIRMATORY PERFORMANCE TEST SCHEDULE AND ORGANIZATION

This section of the Confirmatory Performance Test plan provides details of the test schedule, organization, and responsibilities of test personnel.

7.1 Test Schedule

Pending agency approval of this plan, setup for the Confirmatory Performance Test is scheduled to commence on December 1, 2020, with stack gas sampling scheduled for December 2, 2020. A test schedule is presented in Table 7-1.

The Confirmatory Performance Test for the RKIs will consist of one test condition with three replicate runs. All three runs will be conducted on the same day, if possible. The requirement for the PCDD/PCDF sample train is a minimum of three hours sampling time, as required in §63.1208(b)(1)(ii). This sampling time does not account for sampling port changes, sampling train leak checks, and setup and recovery of the sampling trains. The duration of the Confirmatory Performance Test is expected to be between 15 to 18 hours, including time for establishing steady state operations, setup of sampling equipment, and sample recovery. The quantity of hazardous waste to be burned will vary in order to ensure operational test parameters are met.

7.2 Organization

Figure 7-1 provides an organization chart for test personnel. The organization chart shows personnel responsibilities and lines of communication during testing.

The representative from Eastman's Environmental Affairs Department is responsible for the overall execution of the Confirmatory Performance Test. The Environmental Affairs representative has the primary lines of communication with the Incineration Manager and the Test Coordinator. If for any reason there is a question whether a test run should continue, the Environmental Affairs representative will make the final decision as to whether a run should or should not be aborted based upon input from the Incineration Manager and Test Coordinator.

The representative from Environmental Affairs will have the primary line of communication with the representative(s) from the US EPA and the Tennessee Department of Environment and Conservation (TDEC), and will keep US EPA/TDEC informed of test activities and any changes in the test schedule.

Table 7-1
Test Schedule

Test Day	Activity
Day 1	• Pre-test meeting • Sampling and spiking equipment setup
Day 2	• Perform Confirmatory Performance Test; Runs 1, 2, and 3
Day 3 **(contingency day)**	• Process data collection • Sample shipping • Sampling and spiking equipment teardown and removal

Figure 7-1
Test Organization Chart

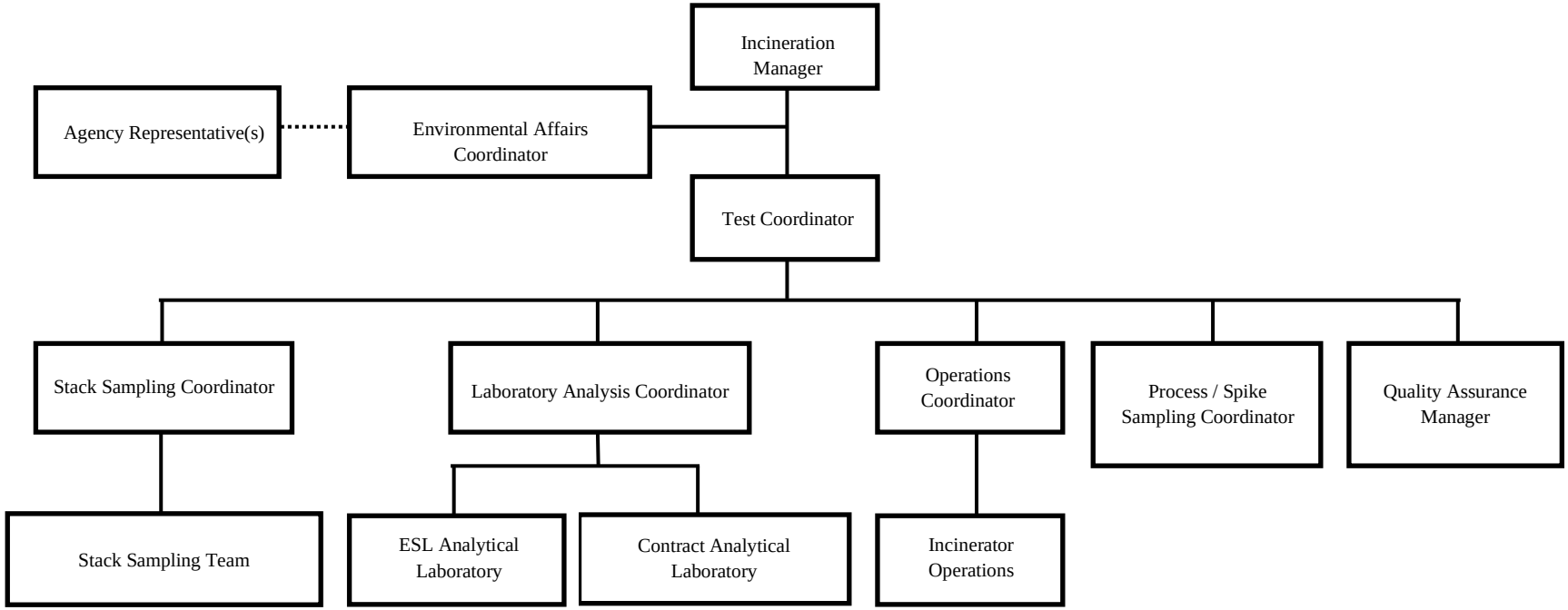

The Incineration Manager has the responsibility of incinerator operations during the Confirmatory Performance Test. All of the operations staff will report to the Incineration Manager.

The Test Coordinator reports to the Environmental Affairs Representative and coordinates the activities of all operations and sampling personnel. The Test Coordinator has the responsibility of ensuring that all test goals are met, from both an operational and a sampling standpoint. The Test Coordinator will communicate with the Incineration Manager to determine when the unit is at steady state and ready for testing, and to ensure that operational goals are achieved. The Test Coordinator will inform the test team of run start and stop times, and of any situations during testing that may require interruption of stack sampling, process sampling or spiking.

The Quality Assurance Manager has primary responsibility for ensuring that all reported data meet the QA objectives associated with the Confirmatory Performance Test sampling and analysis. The QA objectives are described in detail in the Quality Assurance Project Plan (QAPP) included in Appendix I.

The Stack Sampling and Process Sampling Coordinators are responsible for the execution of stack gas and process sampling and the handling of all stack and process samples. The Sampling Coordinators will inform the Test Coordinator of any problems with sampling equipment that may require interruption of the test.

The Stack Sampling Coordinator will coordinate the activities of the stack sampling team, and is responsible for ensuring that the stack gas samples are handled properly and for coordinating analytical activities with the on-site laboratory and contract laboratories. The Laboratory Analysis Coordinator is responsible for coordinating and supervising the analysis of all process samples and specified stack samples.

The Process Sampling Coordinator is responsible for ensuring that the process sampling is conducted according to the proper methods as described in the QAPP. The Process Sampling Coordinator is also responsible for ensuring that the process samples are handled properly and are released to the Laboratory Analysis Coordinator with all chain of custody documentation.
The Spiking Coordinator is responsible for the setup and operation of the spiking equipment during the Confirmatory Performance Test. The Spiking Coordinator is also responsible for sampling of the spiking materials, and for release of those samples to the Laboratory Analysis Coordinator with all chain of custody documentation. The Spiking Coordinator will inform the Test Coordinator of any problems with spiking that may require interruption of the test.

8.0 CONFIRMATORY PERFORMANCE TEST REPORT CONTENTS

The results of the Confirmatory Performance Test will be submitted with the Notification of Compliance after the testing has been completed and the results have been prepared in report format. The test report will be include results of the emissions tests, summary of process operating conditions, and a discussion of the results.

APPENDIX I

QUALITY ASSURANCE PROJECT PLAN (QAPP) FOR THE CONFIRMATORY PERFORMANCE TEST ON EASTMAN'S ROTARY KILN INCINERATORS

Eastman Chemical Company

Tennessee Operations

Kingsport, Tennessee

September 2020

TABLE OF CONTENTS

1.0 PROJECT DESCRIPTION 1

2.0 ORGANIZATION OF PERSONNEL AND RESPONSIBILITIES 7

2.1 TEST COORDINATOR 7

2.2 STACK SAMPLING COORDINATOR 8

2.3 QUALITY ASSURANCE MANAGER 8

2.4 LABORATORY ANALYSIS COORDINATOR 9

2.5 OPERATIONS COORDINATOR 9

2.6 OTHER PROJECT RESPONSIBILITIES 9

3.0 QA OBJECTIVES IN TERMS OF PRECISION, ACCURACY, COMPLETENESS, REPRESENTATIVENESS AND COMPARABILITY 12

3.1 PRECISION, ACCURACY AND COMPLETENESS 12

3.2 REPRESENTATIVENESS AND COMPARABILITY 13

3.3 METHOD DETECTION AND QUANTITATION LIMITS 14

4.0 SAMPLING PROCEDURES 16

4.1 FIELD TESTING DESCRIPTION 16

4.2 PRE-SAMPLING ACTIVITIES 16

4.2.1 Equipment Calibration 16

4.2.2 Glassware Preparation 17

4.2.3 Sample Media Preparation 17

4.2.4 Other Pre-sampling Activities 17

4.3 PROCESS SAMPLE COLLECTION 18

4.3.1 Liquid Wastes and Alternate Fuel Sampling 18

4.3.2 Chlorine Spike Sampling 19

4.4 SAMPLE COLLECTION OF EXHAUST EMISSIONS 20

4.4.1 Sampling Point Determination – EPA Method 1 20

4.4.2 Flue Gas Velocity and Volumetric Flow Rate – EPA Method 2 20

4.4.3 Flue Gas Composition and Molecular Weight – EPA Method 3 or 3A 20

4.4.4 Flue Gas Moisture Content – EPA Method 4 21

4.4.5 Polychlorinated dibenzo (p) dioxins and furans – EPA Method 23 21

4.4.6 Total Hydrocarbons (THC) – Installed CEMS 24

4.5 TOTAL SAMPLES FOR TESTING 25

5.0 SAMPLE HANDLING, TRACEABILITY AND HOLDING TIMES 31

5.1 FIELD SAMPLING OPERATIONS 31

5.2 CHAIN OF CUSTODY PROCEDURES 32

5.2.1 Field Custody Procedures 32

5.2.2 Transfer of Custody and Shipment 33

5.2.3 Analytical Operations 33

5.3 SAMPLE HOLDING TIMES 33
6.0 CALIBRATION PROCEDURES AND FREQUENCY 36
6.1 SAMPLING EQUIPMENT 36
6.1.1 Pitot Tubes 37
6.1.2 Differential Pressure Gauges 38
6.1.3 Digital Temperature Indicator 38
6.1.4 Dry Gas Meter and Orifice 38
6.1.5 Barometer 39
6.2 ANALYTICAL INSTRUMENTS 39
7.0 ANALYTICAL PROCEDURES 44
8.0 DATA REDUCTION, VALIDATION AND REPORTING 46
8.1 DATA REDUCTION 46
8.1.1 Field Data Reduction 46
8.1.2 Laboratory Data Reduction 46
8.1.3 Blank Correction Procedures 47
8.2 DATA VALIDATION 48
8.3 DATA REPORTING 49
8.3.1 Report Contents 49
9.0 INTERNAL QUALITY CONTROL CHECKS AND FREQUENCY 51
9.1 DATA COLLECTION AND SAMPLING QC CHECKS 51
9.1.1 Sampling Equipment Operational QC Checks and Frequency 51
9.1.2 Sample Collection QC Checks and Frequency 55
9.2 ANALYTICAL QC CHECKS 55
9.2.1 Laboratory Quality Control Samples and Blanks 56
9.2.2 Laboratory Data Evaluation 57
10.0 PERFORMANCE AND SYSTEM AUDITS 59
10.1 SYSTEM AUDITS 59
10.2 PERFORMANCE AUDITS 60
11.0 CALCULATION OF DATA QUALITY INDICATORS 61
11.1 PRECISION 61
11.2 ACCURACY 62
11.3 COMPLETENESS 62
11.4 METHOD DETECTION LIMIT 62
12.0 PREVENTATIVE MAINTENANCE 64
12.1. SAMPLING EQUIPMENT INSPECTION AND MAINTENANCE 65
12.2. LABORATORY ANALYTICAL INSTRUMENT MAINTENANCE 65
13.0 CORRECTIVE ACTION 66
14.0 QUALITY ASSURANCE REPORTS TO MANAGEMENT 68

LIST OF TABLES AND FIGURES

FIGURE 1-1 PROCESS OVERVIEW 0

TABLE 1-1 TENTATIVE TEST SCHEDULE 0

TABLE 1-2 STACK SAMPLING 5

TABLE 1-3 PROCESS SAMPLING LOCATIONS AND METHODS 6

FIGURE 2-1 TEST ORGANIZATION CHART 10

TABLE 2-1 SAMPLING AND ANALYSIS RESPONSIBILITIES 11

TABLE 3-1 SUMMARY OF QUALITY ASSURANCE OBJECTIVES AND GOALS 15

FIGURE 4-1 DIAGRAM OF THE RKI SAMPLING PORTS 26

FIGURE 4-2 DIAGRAM OF EPA METHOD 23 SAMPLING TRAIN 27

FIGURE 4-3 DIAGRAM OF EPA METHOD 23 RECOVERY PROCEDURES PER EPA APPROVED ALTERNATIVE ALT-052 28

TABLE 4-1 NUMBER OF WASTE AND SPIKE SAMPLES TO BE COLLECTED AND ANALYZED 29

TABLE 4-2 NUMBER OF STACK SAMPLES COLLECTED 30

FIGURE 5-1 EXAMPLE CHAIN-OF-CUSTODY FORM 34

TABLE 5-1 SUMMARY OF SAMPLE CONTAINERS, PRESERVATION AND HOLDING TIMES 35

TABLE 6-1 SAMPLING EQUIPMENT CALIBRATION REQUIREMENTS 40

TABLE 6-2 ANALYTICAL INSTRUMENT CALIBRATION REQUIREMENTS 42

TABLE 7-1 SAMPLING AND ANALYTICAL PROCEDURES SUMMARY 45

TABLE 9-1 QUALITY CONTROL VALIDITY CHECKS 58

1.0 PROJECT DESCRIPTION

Eastman Chemical Company, Tennessee Operations (Eastman) owns and operates a RCRA-hazardous waste incineration facility consisting of two rotary kiln incinerators and a liquid chemical destructor, at its facility in Kingsport, Tennessee. This document addresses testing of the rotary kiln incinerators (RKIs).

Each RKI air pollution control system consists of a quench chamber to cool the flue gas, a multi-rod scrubber to remove acid gas and coarse particulate, and two wet electrostatic precipitators (WESPs) in series for fine particulate removal. The cleaned, cooled flue gas exits the second WESP and is drawn through a variable speed ID fan that directs the gas to a stack which exhausts the cleaned gas to the atmosphere. A diagram of the RKI is shown in Figure 1-1. A more detailed description of the RKI is provided in the Confirmatory Performance Test plan.

The proposed schedule for completion of the Confirmatory Performance Test is provided in the test plan. Eastman intends to conduct the Confirmatory Performance Test for this unit on a schedule agreed upon by Eastman and the Tennessee Department of Environment and Conservation (TDEC). The test program involves sampling of the emissions during one test condition.

Samples of the stack gas will be collected for the following compounds using the indicated method during the Confirmatory Performance Test:

- Polychlorinated dibenzo-(p)-dioxins and dibenzofurans (PCDD/PCDF) emissions will be collected using an EPA Method 23 sampling train.
- Data from continuous emission monitoring systems (CEMS) will be collected for total hydrocarbons (THC) and oxygen (O_2).

Eastman will provide the personnel for the quality control and quality assurance for the sampling and analysis. Eastman and/or contract personnel will collect the stack gas samples using the methods described in Section 4. Eastman personnel will collect all process samples as detailed in

Section 4. The on-site Environmental Services Laboratory (ESL) and/or equivalent contract laboratories will perform all analyses as described in Section 2.

The stack testing will be performed under conditions that are designed to simulate normal potential for emissions of pollutants of concern. The emissions demonstration for the RKI Confirmatory Performance Test consists of one test condition with three replicate runs.

The test condition represents normal potential for the formation of PCDD/PCDF. Above average combustion gas flowrate represents decreased residence time in the combustion chamber, which may lessen the destruction of organic compounds, as well as decreasing the time that the APCS will have to act on the pollutants. Above average hazardous waste feedrate will increase the potential for emissions of these pollutants. The reduced combustion temperature may limit the combustion of organics. The average feedrate of chlorine will allow the potential for emission of PCDD/PCDF pollutants.

The Confirmatory Performance Test is expected to take three days including set-up and removal of test equipment. A tentative test schedule for the Confirmatory Performance Test is shown in Table 1-1. An overview of sampling points for stack gas samples is given in Table 1-2. Situations that would temporarily halt and potentially extend a test run include: extreme weather, broken glassware, a leak in the sampling trains, power outages, plant failure, and any other test equipment failures.

This Quality Assurance Project Plan (QAPP) provides guidance for performing sampling and analysis. The QAPP defines all aspects of quality assurance and quality control procedures and establishes sampling and analytical quality indicators that will demonstrate achievement of the Confirmatory Performance Test objectives. Additionally, this QAPP defines precision and accuracy criteria for all required measurements that will be used to set the acceptable boundaries for the evaluation of all test data, and consequently, to demonstrate that all associated emissions data is of sufficient quality to serve as the basis for the demonstration of compliance.

FIGURE 1-1

PROCESS OVERVIEW

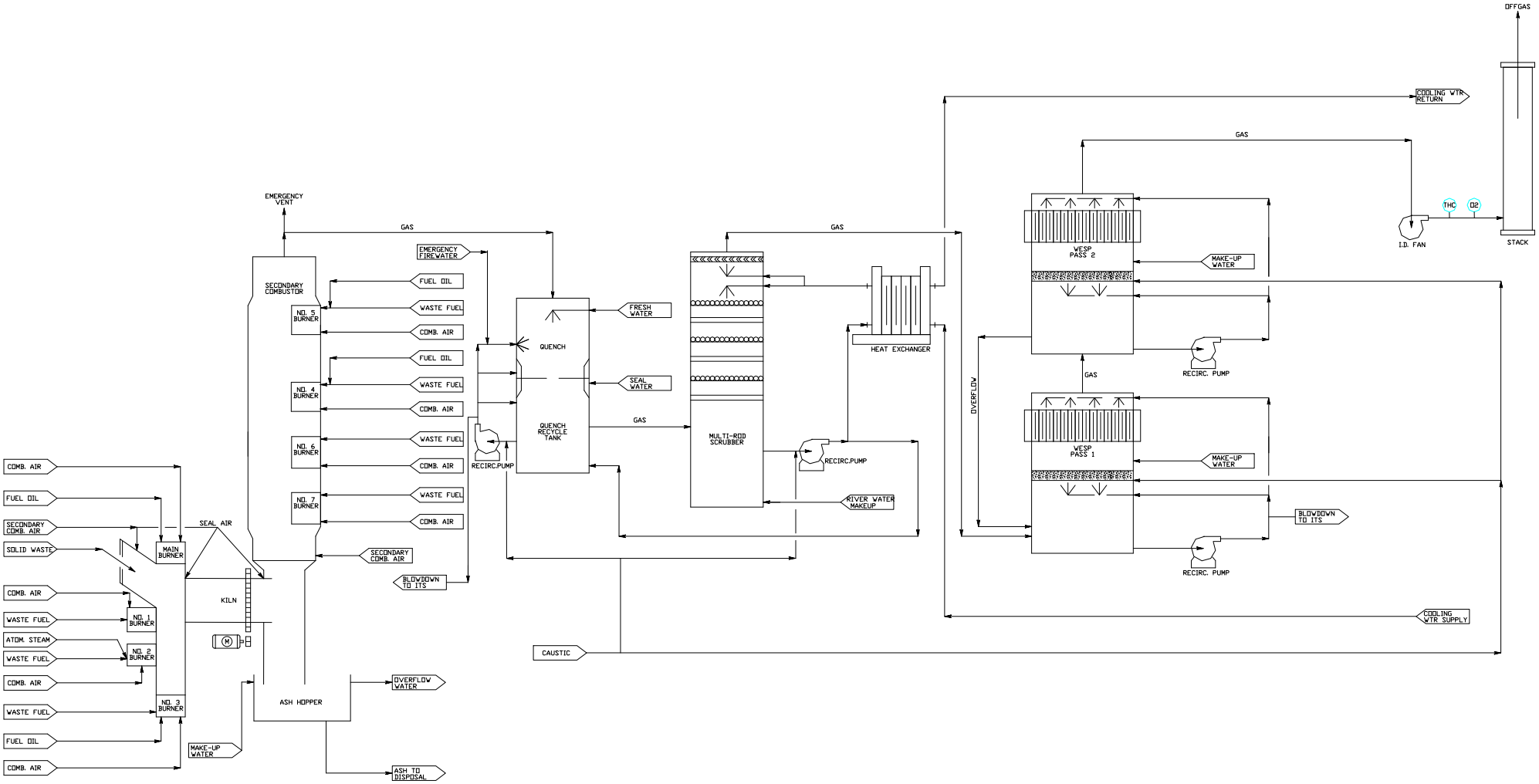

TABLE 1-1

TENTATIVE TEST SCHEDULE

DAY	TIME	TASKS
1	1300	Mobilization, equipment set-up and pre-test meetings
2	0700	Stack and process sampling personnel prepare for Test Condition 1, Run 1
	0900	Start Run 1 for PCDD/PCDF at Test Condition 1
	1200	Finish Run 1 for PCDD/PCDF (EPA Method 23 – Run for 180 minutes), set up for Run 2
	1300	Start Run 2 for PCDD/PCDF at Test Condition 1
	1600	Finish Run 2 for PCDD/PCDF (EPA Method 23 – Run for 180 minutes), set up for Run 3
	1700	Start Run 3 for PCDD/PCDF at Test Condition 1
	2000	Finish Run 3 for PCDD/PCDF (EPA Method 23 – Run for 180 minutes)
3		Contingency day Dismantle equipment

TABLE 1-2

STACK SAMPLING

Parameter(s)	Number of Sampling Points	Number of Runs per Condition	Test Duration
PCDD/PCDF (EPA Method 23)	24	3	180 minutes

TABLE 1-3

PROCESS SAMPLING LOCATIONS AND METHODS

Stream	Sampling Location	Sampling Method Description	Frequency of Sampling
Liquid Waste*	At the appropriate tap in the feed line	Based on Tap Method (Fill sample bottle directly from a tap in the line)	Beginning of run End of run
	At a bleed line between the tank and the pump		Prior to test
Alternate Fuel	At the appropriate tap in the feed line	Based on Tap Method (Fill sample bottle directly from a tap in the feed line)	Beginning of run End of run
Chlorine Spike	At the appropriate tap in the feed line	Based on Tap Method (Fill sample bottle directly from a tap in the feed line)	Beginning of run End of run

* Liquid waste feed streams will be sampled at the start and end of each run from taps in feed lines. Alternatively, wastes may be unloaded to dedicated tanks and sampled prior to the start of the test from a bleed line between the tank and the pump.

2.0 ORGANIZATION OF PERSONNEL AND RESPONSIBILITIES

Eastman assumes responsibility for all measurements made in connection with this project and therefore, responsibility for the implementation of an adequate Quality Assurance (QA) Program. This section discusses Eastman's approach to management of the QA aspects of the subject test program. Provisions and procedures, which are incorporated in the overall management structure to promote implementation of QA procedures and adherence to QA guidelines, are described.

The management structure and organization employed by Eastman facilitates the development and performance of Quality Assurance/Quality Control (QA/QC) functions by accurately defining the QA/QC direct lines of communication and authority between different levels of project management and the QA management structure. Eastman's QA Program is designed in a way that facilitates interaction between QA Program Personnel and the Project Team. QA Program Personnel interface independently with the Project Team Members at all levels, monitoring data representativeness, accuracy, precision and completeness. QA Program Personnel are free to interact directly with Project Team Members at any time if QA considerations in one of these areas need to be addressed.

The organization of the Project Team, including QA functions, is shown in the Project Organizational Chart (see Figure 2-1). The QA structure is independent of the organizational groups who will generate environmental measurement data during this project. The focus of the Eastman QA Program is the Quality Assurance Manager (QA Manager). The QA Manager is responsible for the day-to-day overseeing of QA activities and occupies a level higher than the Stack Sampling Coordinator. The QA Manager communicates directly with the Confirmatory Performance Test Coordinator.

2.1 TEST COORDINATOR

The Test Coordinator oversees the Stack Sampling Coordinator and Laboratory Analysis Coordinator, and the Operations Coordinator's test program planning, organization and performance on the Confirmatory Performance Test. The Test Coordinator provides technical

supervision and oversees protocol development and review, data interpretation and report preparation

The Test Coordinator supervises the planning, oversight and review functions associated with the various elements of the test program. The Test Coordinator will be responsible for the implementation of the test, as well as the coordination and oversight of all testing activities.

2.2 STACK SAMPLING COORDINATOR

The Stack Sampling Coordinator oversees and supervises all stack-sampling activities during the Confirmatory Performance Test. The Stack Sampling Coordinator is responsible for ensuring that all exhaust gas samples are collected and for coordinating analytical activities with the on-site laboratory and contract laboratories. The Stack Sampling Coordinator will work with any contract stack sampling firms and contract laboratories as necessary to coordinate stack sampling and sample analyses that may be performed by contract personnel.

2.3 QUALITY ASSURANCE MANAGER

The Quality Assurance Manager (QA Manager) has the primary responsibility for ensuring that all reported data meet the QA objectives associated with the measurement project. The QA Manager is independent of all other testing activities and reports directly to the Test Coordinator. The QA Manager is responsible for the monitoring of the quality of laboratory work and taking appropriate actions to ensure that quality standards are being met. The QA Manager is specifically responsible for the following:

- Managing the laboratory internal assessment program
- Managing the continual improvement process
- Managing the management review process
- Oversight of quality control data
- Implementing improvements to the laboratory quality system and
- Communicating the effectiveness of the laboratory quality system to Laboratory Management

2.4 LABORATORY ANALYSIS COORDINATOR

The Laboratory Analysis Coordinator will coordinate and supervise the analysis of all process samples and specified stack samples. The analysis of samples and blanks will be performed by Eastman's on-site laboratory and/or equivalent contract laboratories.

2.5 OPERATIONS COORDINATOR

The Eastman Incinerator Area Manager will designate an Operations Coordinator. The Operations Coordinator is responsible for obtaining spiking and waste materials and for ensuring the process is operating at the desired conditions during the Confirmatory Performance Test.

2.6 OTHER PROJECT RESPONSIBILITIES

Other responsibilities are shown in Figure 2-1, but will not be discussed. Sampling and analysis responsibilities are summarized in Table 2-1.

FIGURE 2-1

TEST ORGANIZATION CHART

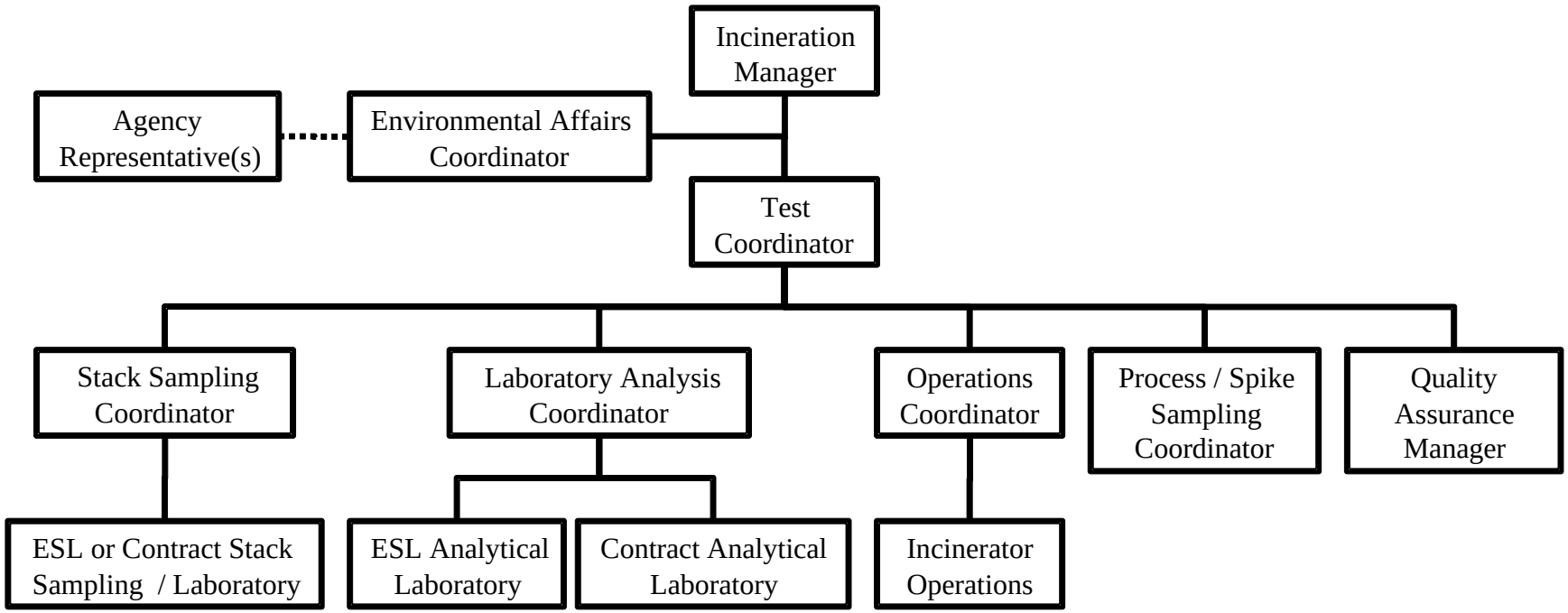

TABLE 2-1

SAMPLING AND ANALYSIS RESPONSIBILITIES

Sample Matrix	Parameter	Sampling Responsibility	Analysis Responsibility
Stack Gas	PCDD/PCDF	Eastman or Contractor	Contract Laboratory
Liquid Waste	Archived	Eastman	Not Applicable
Alternate Fuel	Archived	Eastman	Not Applicable
Chlorine Spike	Total Chlorine/Chloride*	Eastman	Certificate of Formulation

* Total Chlorine/Chloride in the Chlorine Spike will be determined from the Certificate of Formulation, but Chlorine Spike samples will be collected and archived.

3.0 QA OBJECTIVES IN TERMS OF PRECISION, ACCURACY, COMPLETENESS, REPRESENTATIVENESS AND COMPARABILITY

3.1 PRECISION, ACCURACY AND COMPLETENESS

The overall objective for this project is to quantify the parameters listed in the Confirmatory Performance Test plan and to determine the dioxin\furan emissions from the RKI at Eastman's Kingsport facility. The collection of data to characterize the waste feed and stack gas requires that trained personnel conduct the sampling and analysis procedures with properly operating and calibrated equipment. QA objectives for the critical measurements of this program are presented in Table 3-1, which depicts the goals for precision, accuracy and completeness. Numerical QA objectives for accuracy and precision of the sampling system calibration, sample preparation, and analysis procedures can be established based on previous experience in applying comparable procedures to a variety of complex sample matrices.

Precision is defined as the degree of mutual agreement between individual measurements made under prescribed conditions. Precision goals have been provided for analytical measurements that will be made in replicate, or as part of matrix spiking duplicate measurements.

For some of the methods developed by the American Society for Testing and Materials, precision is gauged as the repeatability of results. The values presented for the limits of acceptable repeatability are applicable to confidence levels of 95%. That is, the calculated repeatability and reproducibility values should not exceed the limits in more than 5% of the analyses. Repeatability is defined as the difference in absolute value between two consecutive test results, carried out on the same sample in the same laboratory, by the same operator, using the same apparatus.

Accuracy is defined as the degree of agreement of a measurement with a reference value, by analyzing a reference standard material, or with a true value, e.g. by determining the recovery of a matrix spike or surrogate spike into a sample.

Completeness is defined as the percentage of samples judged valid compared to the total number of samples collected. Every attempt will be made to have all generated data to be judged valid data. However, realistically, some samples may be lost in laboratory/shipping accidents and some results may be deemed questionable based on internal quality control procedures. The data quality objective for completeness has been set at 100% for all data considered critical to the project. Any data report with less than 100% completeness will be assessed on a case-by-case basis according to the priority of the data, with the potential for a repeat of sampling and/or analysis. Samples for which the critical data fail accuracy or precision data quality objectives, and therefore, completeness objectives, will be thoroughly investigated to determine if the test goals have been compromised. These samples may require reanalysis to ensure that the quality objectives are met. In the event that data quality objectives specified in this QAPP cannot be met, the test report will include a discussion on why the objectives could not be met, as well as an explanation on how the validity of the data was verified.

Evaluation of the precision and accuracy of the analytical program will be completed by examining results from the analysis of internal and calibration check standards, surrogate compounds, and laboratory, reagent and method blanks, as well as field blanks. Additionally, results from the analysis of matrix or surrogate spike samples will be used in the evaluation.

3.2 REPRESENTATIVENESS AND COMPARABILITY

It is recognized that the usefulness of the data is also contingent upon meeting criteria for representativeness and comparability. Whenever possible, reference methods and standard sampling procedures will be used. The QA objective is that all measurements be representative of the media and process being evaluated. For example, each of the stack gas samples will represent the average composition of the stack gas during each test run that the sample is collected.

The corresponding QA objective is that all data resulting from sampling and analysis be comparable with other representative measurements made by Eastman or a contracted organization on these or a similar process operating under similar conditions. The use of published sampling and analytical methods, as well as standard reporting units, ensures the

comparability of the data. Results from the analyses of all samples for a given matrix will be reported in the same units.

3.3 METHOD DETECTION AND QUANTITATION LIMITS

Each laboratory in this test program may encounter measurements that are below detection or quantitation. The method detection limit (MDL) for these parameters or analytes will be determined by each laboratory on a periodic basis using the statistical procedures given in 40 CFR 136, Appendix B. No attempt will be made in this program to develop MDLs or estimated quantitation limits (EQLs) specific to this test program. Analytical reporting will generally follow the standard convention of showing “flag” letters that indicate whether an analyte was below the MDL (e.g., U), found in the blank as well as in the sample (e.g., B), and/or between the MDL and the EQL (e.g., J). Detection and quantitation limits will also be reported when results are below either limit.

TABLE 3-1

SUMMARY OF QUALITY ASSURANCE OBJECTIVES AND GOALS

Sample Matrix	Parameter	Analysis Method	Precision	Accuracy (% Recovery)	Completeness (% Of Total)
Stack Gas	PCDD/PCDF	EPA Method 23	NA	Internal Standards: Tetra-Hexa: 40 – 130 % Hepta-Octa: 25 – 130 % Surrogate Standards: 70 – 130 %	100 %
Liquid Waste	Archived	NA	NA	NA	NA
Alternate Fuel	Archived	NA	NA	NA	NA
Chlorine Spike	Archived	NA	NA	NA	NA

Abbreviations:
NA – Not Applicable

4.0 SAMPLING PROCEDURES

This section provides descriptions and methodologies of the sampling techniques to be employed during this Confirmatory Performance Test. Any deviations from the specified methodologies will be discussed with on-site regulatory personnel and fully documented in the Confirmatory Performance Test Report.

4.1 FIELD TESTING DESCRIPTION

For stack gas samples, one set each of reagent and field blanks will be collected per applicable parameter.

Eastman or contract personnel will collect all stack gas samples for EPA Method 23 sampling. Eastman personnel will collect process samples in pre-cleaned sample containers using appropriate sampling techniques. Sampling activities will be recorded on pre-printed field data sheets. Chain of custody forms will be provided for use with all samples.

Experienced stack sampling personnel will be on-site under the direction of the Eastman Stack Sampling Coordinator. The sampling personnel will maintain radio communication with the control room to assure that sampling starts and stops at the appropriate intervals.

4.2 PRE-SAMPLING ACTIVITIES

Pre-sampling activities include equipment calibration, glassware preparation, sample media preparation, and other tasks, which are described or referenced below. Other pre-sampling activities include team meetings, equipment preparation and setup, and finalizing details before initiating sampling.

4.2.1 Equipment Calibration

Equipment will be inspected for proper operation and durability before calibration. Calibrations will be performed before field sampling. Detailed information on specific calibration procedures for sampling equipment is provided in Section 6.

4.2.2 Glassware Preparation

Sample train glassware and sample containers will require specialized cleaning to avoid contamination of the sample from collection containers or sampling devices. Sample containers will be purchased pre-cleaned to specified EPA protocols. The EPA Method 23 sampling train glassware upstream of the adsorbent module will be washed with warm soapy water and rinsed with distilled water and acetone. Filters and adsorbent modules will be purchased pre-cleaned as described in EPA Method 23.

4.2.3 Sample Media Preparation

All sample reagents will be prepared in accordance with applicable regulatory methods to minimize the probability of using contaminated reagents. This includes the use of reagents from the same lot and the collection and analysis of appropriate blanks. Preparations of sampling media are summarized in the procedural descriptions in Section 4.4.

4.2.4 Other Pre-sampling Activities

Sample team meetings are held to designate responsibilities to each team member. Assignments are based on individual experience and relative importance to the assigned task. Many team members have participated in similar projects. Other pre-sampling activities may include the generation of sample lists, printing of computer generated sample labels, procurement of supplies, and proper packing of all equipment.

Site setup is the final pre-sampling activity. This task involves moving the sampling equipment to the vicinity of the sample collection area. All sample trains will be assembled and recovered in a clean area designated for sample recovery.

Before sampling starts, preliminary measurements are made at the stack locations to determine flue gas moisture and velocity. These measurements facilitate the determination of nozzle size selection and operation rates for isokinetic trains.

4.3 PROCESS SAMPLE COLLECTION

Sampling of process streams will be conducted using the equipment specified by each sampling and analytical method. The following sections describe the sampling, as it will be conducted for each stream. Table 7-1 presents the sampling and analysis summary information for each process sample that will be collected. Information on sampling container type and volume requirements, as well as additional sample handling and preservation information is presented in Table 5-1.

4.3.1 Liquid Wastes and Alternate Fuel Sampling

It is anticipated that the only significant sources of the chlorine fed to the unit during the test will be introduced via the chlorine spike. However, Eastman plans to sample each waste stream at the beginning and end of each run. These samples will be archived following the conclusion of the Confirmatory Performance Test. They will only be analyzed in the event of a test anomaly or if an adequate chlorine feed rate cannot be established.

Based upon previous experience, it may be necessary to burn alternate fuel during the Confirmatory Performance Test for supplemental thermal input to maintain flame stability. If alternate fuel is fed to the RKI during the test, alternate fuel will be sampled at the start and end of each run. These samples will be archived following the conclusion of the Confirmatory Performance Test. They will only be analyzed if questionable results are obtained after analysis of the test data.

All liquid waste feed streams and alternate fuel will be sampled at the start and end of each run. Alternatively, wastes may be unloaded to dedicated tanks and sampled prior to the start of the test from a bleed line located between the tank and the suction side of the pump. These samples will be collected using a method similar to the Tap sampling method. To ensure the sample is representative, the tank mixer will be activated and the material circulated at least 30 minutes prior to sampling.

Sampling personnel will collect at least six ounces of liquid wastes, and of alternate fuel, into eight-ounce, pre-labeled, high-density polyethylene wide mouth bottles. These liquids are self-flowing, so a collection apparatus will not be necessary. The sampler will wear a new pair of

gloves for each grab sample. Before sample collection, the purge valve on the sampling line will be flushed into a waste collection bucket. Once the line has been flushed, the process sampler will hold the sample bottle underneath the exit valve allowing the material to flow directly and freely into the sample container. A plastic screw cap will be used to secure the sample. All sample containers will be new, unused, and pre-labeled with the following information:

- Test run number
- Sample number, and
- Test/sample name

The sampling date and time will be recorded on the label when the sample is collected. Samples will be taken to a secured location in an on-site laboratory, where they will be archived. The process sampler will initiate a chain of custody for each sample, and all transfers of custody during the above procedures will be reflected on the custody form.

4.3.2 Chlorine Spike Sampling

A grab sample of the spiking material will be collected at the beginning and end of each sampling run using a method similar to the Tap sampling method. Samples of the spike will not be analyzed, but rather archived following the conclusion of the Confirmatory Performance Test. The vendor-supplied Certificates of Formulation (COF) will be used to calculate the constituent feed rates for the chlorine spike. The samples taken during the Confirmatory Performance Test will only be analyzed if questionable results are obtained after analysis of the test data.

Using this method, the sampling personnel will collect approximately eight ounces of the chlorine spike into an eight-ounce, pre-labeled, high-density polyethylene or glass wide mouth bottle. The sampling is identical to the liquid wastes sampling.

Samples will be taken to a secured location in an on-site laboratory, where they will be archived. The process sampler will initiate a chain of custody for each sample, and all transfers of custody during the above procedures will be reflected on the custody form.

4.4 SAMPLE COLLECTION OF EXHAUST EMISSIONS

Table 7-1 presents the sampling and analysis summary information for each stack gas sample that will be collected. Information on sample container type and volume requirements, as well as additional sample handling and preservation information, is presented in Table 5-1. A diagram of EPA Method 23 recovery procedures is presented in Figure 4-3. At every point in sample recovery that a brush is used during rinsing, the brush will be rinsed with the appropriate solvent and the rinsate will be collected in the sampling container. Rinses will be completed three times or until all visible particulate matter has been removed from the sampling equipment.

4.4.1 Sampling Point Determination – EPA Method 1

The number and location of the traverse points in the stack will be determined according to the procedures outlined in EPA Method 1. Sampling points are depicted in Figure 4-1.

The stack associated with the performance test does not contain any devices described in section 11.4.1 of 40 CFR Part 60, Appendix A, Method 1 which would induce swirling or cyclonic flow. Therefore, a cyclonic flow check need not be performed prior to testing.

4.4.2 Flue Gas Velocity and Volumetric Flow Rate – EPA Method 2

The flue gas velocity and volumetric flow rate will be determined according to the procedures outlined in EPA Method 2. Velocity measurements will be made using Type S pitot tubes, conforming to the geometric specifications outlined in the method. Differential pressures will be measured with fluid manometers of the appropriate range. Effluent gas temperatures will be measured with chromel-alumel thermocouples equipped with a digital temperature indicator.

4.4.3 Flue Gas Composition and Molecular Weight – EPA Method 3 or 3A

EPA Method 3 will be used to determine the dry molecular weight of the flue gas stream. One integrated sample will be collected in a flexible bag for each test run using the procedures of Method 3. The carbon dioxide concentration in the sample will be determined using an Orsat, or as an alternative, Method 3A (instrumental analyzer method) may be used for analysis of the sample. The oxygen concentration in the flue gas stream will be determined from the continuous

emissions monitoring system (CEMS), which will operate continuously throughout the duration of each run.

4.4.4 Flue Gas Moisture Content – EPA Method 4

The flue gas moisture content will be determined in conjunction with the EPA Method 23 sampling train according to the procedures outlined in EPA Method 4. The impingers will be connected in series and will contain the reagents necessary for the train. The impingers will be surrounded by an ice bath to ensure condensation of moisture in the stack gas sample. Any moisture that is not condensed in the impingers is captured in silica gel. For determination of total moisture in the stack gas, the moisture condensed in the impingers and captured in the silica gel will be weighed, summed, and entered into moisture content calculations.

4.4.5 Polychlorinated dibenzo (p) dioxins and furans – EPA Method 23

The sampling and analytical procedures outlined in EPA Method 23 will be used to collect samples for determination of selected polychlorinated dibenzo-(p)-dioxin and dibenzofuran concentrations during the Confirmatory Performance Test.

Using this method, stack gas emissions are withdrawn from each sampling point at an isokinetic sampling rate, and are collected in the sample probe, on a glass fiber filter, and on a packed column of adsorbent.

A diagram of the sampling train, which is similar to that used in EPA Method 5, is presented in Figure 4-2. In addition to those components included in the EPA Method 5 train, the Method 23 train includes a Teflon filter support, a condenser, and an adsorbent module. The following provides a description of the sample extraction and filter system:

Probe Nozzle:	Quartz or borosilicate glass
Probe Liner:	Borosilicate or quartz glass tubing
Pitot Tube:	Type S (meeting specifications of EPA Method 2)
Filter:	Glass fiber, without organic binder
Filter Holder:	Borosilicate glass with a Teflon filter support

Heating System: Capable of maintaining a temperature of 120 ± 14°C around the probe and filter holder during sampling

After the filter holder, sample gas passes through a vertical condenser and into the adsorbent module. The adsorbent module is sized to contain 20 to 40 g of XAD-2 resin, and may be oriented vertically so that condensate drains from the condenser through the sorbent, but other physical configurations of the resin trap/condenser assembly are acceptable. In addition to the resin, the sorbent trap includes a coarse glass or Teflon frit and glass wool plugs in order to retain the sorbent. Surrogate standards are applied to the sorbent in the analytical lab prior to sampling. A temperature sensor capable of measuring to within 1°C is placed at the inlet of the adsorbent module.

The remainder of the sampling train consists of four or five impingers connected in series. The first impinger is an empty short-stem impinger used as a knockout. The second impinger is a Greenburg-Smith impinger with the standard tip and plate, containing 100 mL of reagent water. The third impinger also contains 100 mL of reagent water and is of the Greenburg-Smith design, but modified so that the glass tube has an unconstricted 13-mm inner diameter and extends to within 13 mm of the flask bottom. An optional fourth, empty Greenburg-Smith impinger, modified as described for the third impinger, may be included or excluded. The final impinger contains a known weight (200 to 300 g) of silica gel and is of the Greenburg-Smith design, modified as described for the third impinger. A temperature sensor capable of measuring to within 1°C is placed at the outlet of the final impinger.

The sampling train also includes a pump to circulate cooling water from the ice bath surrounding the impingers to the condenser and the adsorbent module and back to the ice bath. The gas temperature entering the adsorbent module should not exceed 20 °C during sampling.

To ensure proper operation of the sampling train, both pre- and post-test leak checks will be conducted per EPA Method 5 procedures for each sampling run. Additionally, a leak check will be conducted during a run if a component change becomes necessary. The leakage rates for all leak checks will not exceed 4% of the average sampling rate, or 0.02 cfm, whichever is less.

Should a pre-test leak check not meet these specifications, the problem will be identified and repaired, and the leak check will be passed before sampling begins. Should a leak check during a run or following a run not meet the specifications, one of two options will be employed: a) the leakage rate will be recorded and the sample volume will be corrected, or b) the sampling run will be voided.

During each sampling run, the sample train will be operated in accordance with the procedures and specifications outlined in EPA Method 23. Special attention will be given to the following operating specifications:

- The temperature around the probe and filter holder will be maintained at 120 ± 14 °C.
- The temperature at the inlet of the adsorbent module will be maintained at 20 °C or less.
- The temperature at the outlet of the final (silica gel) impinger will be maintained at less than 20 °C.
- An isokinetic sampling rate within 90 – 110% will be maintained.

After completing each sampling run and post-run leak check, the nozzle end of the sampling probe will be sealed with Teflon tape or aluminum foil and the probe will be disconnected from the filter holder. Once the probe has cooled enough to be handled, any excess particulate matter will be wiped from the tip of the probe. Both ends of the probe and all openings on the filter holder, transfer line, condenser, sorbent trap, and impingers will be sealed with Teflon tape, ground glass caps, or aluminum foil.

For sample recovery, all sampling train components will be transferred to an area free from uncontrolled dust and other contaminants, and protected from weather, to minimize sample contamination or loss. Recovery procedures will follow those outlined in EPA Method 23, except as described below, and are shown in Figure 4-3. In addition to the adsorbent module, three sample containers, outlined below, will be created during the recovery process.

Container 1	Filter
Adsorbent Module	Capped tightly and covered with aluminum foil
Container 2	Probe, filter holder, condenser, and connecting lines rinses with acetone

Container 3 Probe, filter holder, condenser, and connecting lines rinses with toluene

EPA Approved Alternative ALT-052 allows the substitution of toluene for methylene chloride as a recovery solvent for EPA Method 23. Therefore, the acetone rinses described in EPA Method 23 section 4.2.3 will be performed, but toluene rinses will be substituted for the methylene chloride rinses specified in that section. The toluene rinses described in EPA Method 23 section 4.2.4 will be performed, but per ALT-052, the toluene rinses need not be analyzed separately, and may be combined with the other sample fractions prior to extraction and analysis.

The amount of water contained in the first three impingers, and in the optional fourth impinger (if used), will be measured to within 1 mL or weighed to within 0.5 g. The color and condition of the silica gel will be noted, and the weight of the silica gel plus its impinger will be recorded to within 0.5 g. Both the water and the silica gel will be discarded.

One full set of field blank samples will be submitted with the EPA Method 23 emissions samples. A complete sampling train, not used to collect any emissions samples, will be assembled in the staging area and taken to the sampling area, where the same number of leak checks will be performed as anticipated for a Method 23 emissions sampling train used to conduct a sampling run. Alternatively, a specific volume of ambient air may be drawn through the field blank train to simulate air intake during leak checks of a train used during a sampling run. Field blank samples will be recovered from the blank train as described above for sample recovery from an EPA Method 23 sampling train, as if the blank train had been used for emissions sampling. All samples recovered from the blank train will be submitted as field blank samples. Reagent blank samples, including aliquots of sample recovery solvents, an unused filter, and an unused adsorbent module, will also be submitted.

4.4.6 Total Hydrocarbons (THC) – Installed CEMS

The permanently installed continuous emissions monitoring system (CEMS) will be used to measure stack gas concentrations of total hydrocarbons (THC). The monitor will operate continuously throughout the duration of each run.

4.5 TOTAL SAMPLES FOR TESTING

Included in Tables 4-1 and 4-2 are the number of samples that will be collected and analyzed.

FIGURE 4-1

DIAGRAM OF THE RKI SAMPLING PORTS

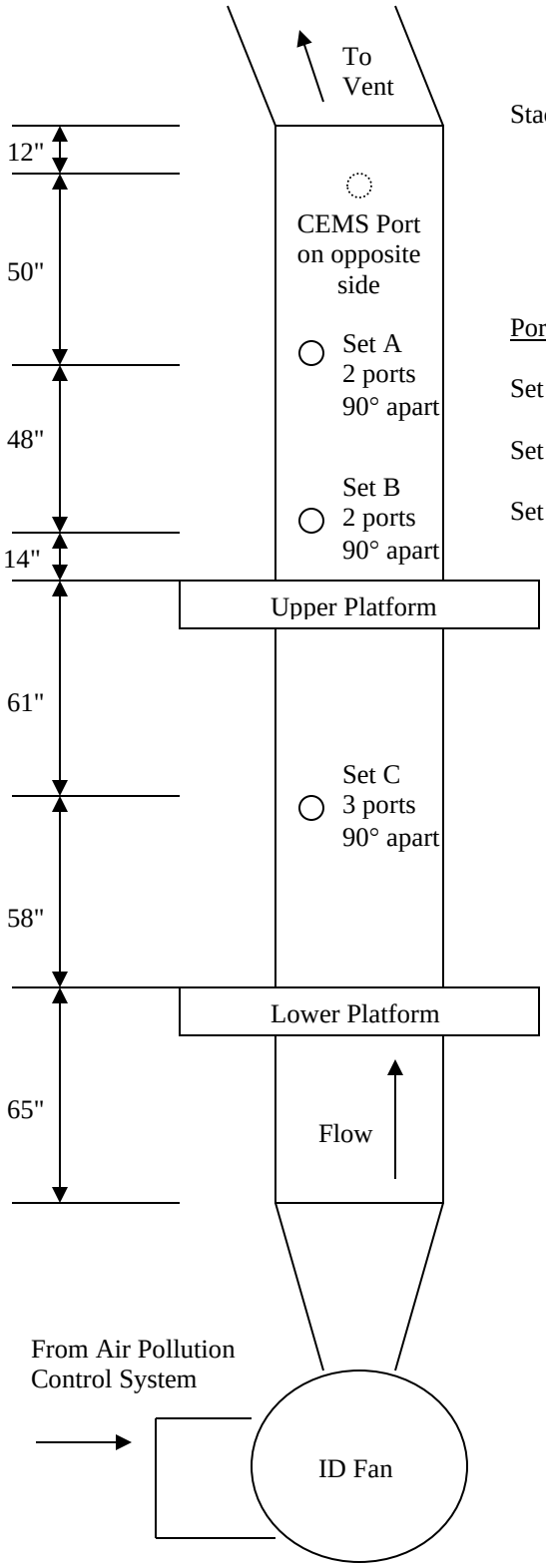

Stack Inside Diameter = 48"

Ports	Distance Upstream from Flow Disturbance: Inches	Distance Upstream from Flow Disturbance: Diameters	Distance Downstream from Flow Disturbance: Inches	Distance Downstream from Flow Disturbance: Diameters	Minimum Traverse Points for Isokinetic Sampling
Set A	62	1.29	246	5.13	20
Set B	110	2.29	198	4.13	24
Set C	185	3.85	123	2.56	24

Traverse Point Distances from Stack Inside Wall not including port depth

Set A Point #	Set A Distance (inches)	Sets B & C Point #	Sets B & C Distance (inches)
1	1.25	1	1.01
2	3.94	2	3.22
3	7.01	3	5.66
4	10.85	4	8.50
5	16.42	5	12.00
6	31.58	6	17.09
7	37.15	7	30.91
8	40.99	8	36.00
9	44.06	9	39.50
10	46.75	10	42.34
		11	44.78
		12	46.99

FIGURE 4-2

DIAGRAM OF EPA METHOD 23 SAMPLING TRAIN

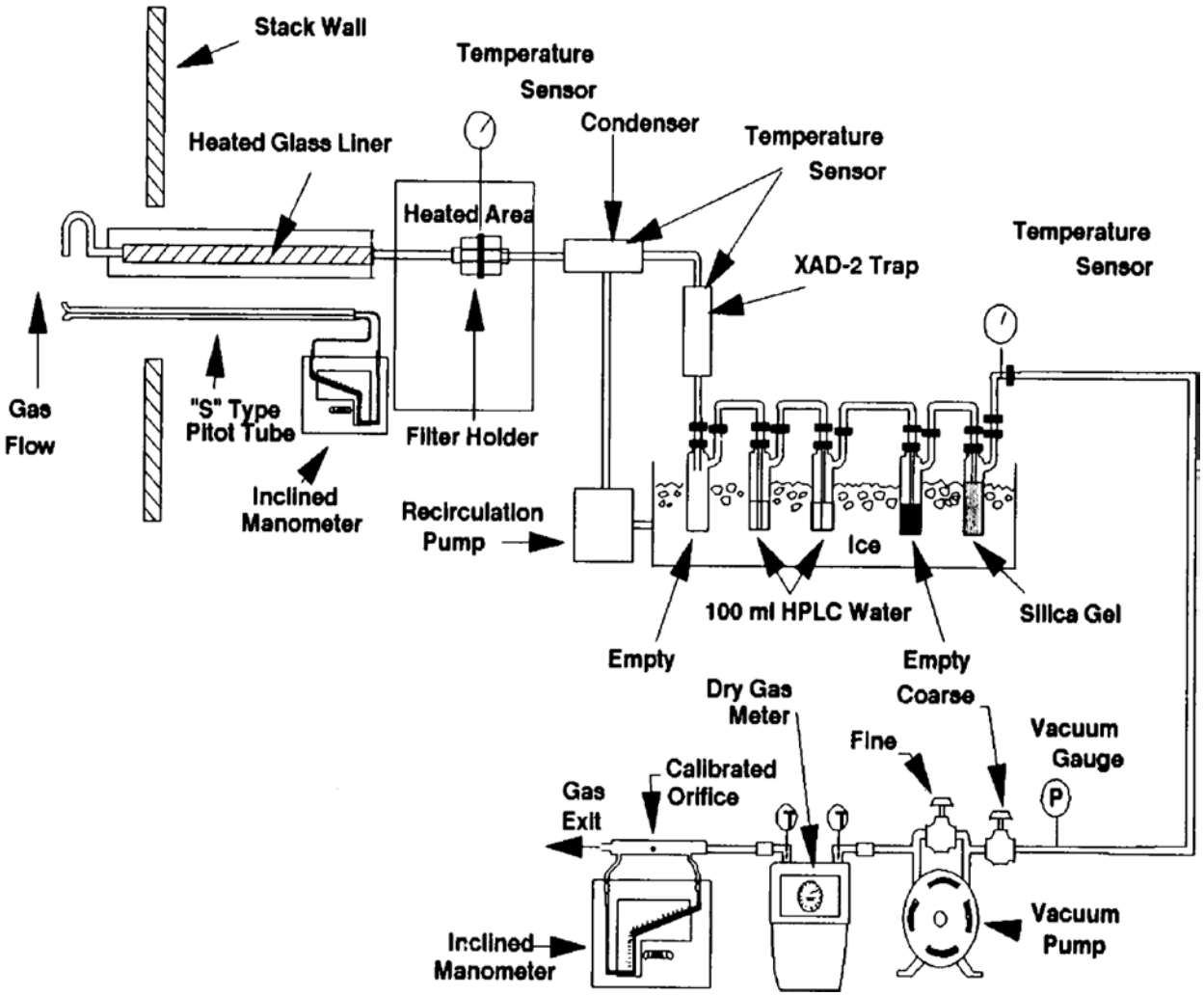

FIGURE 4-3

DIAGRAM OF EPA METHOD 23 RECOVERY PROCEDURES

PER EPA APPROVED ALTERNATIVE ALT-052

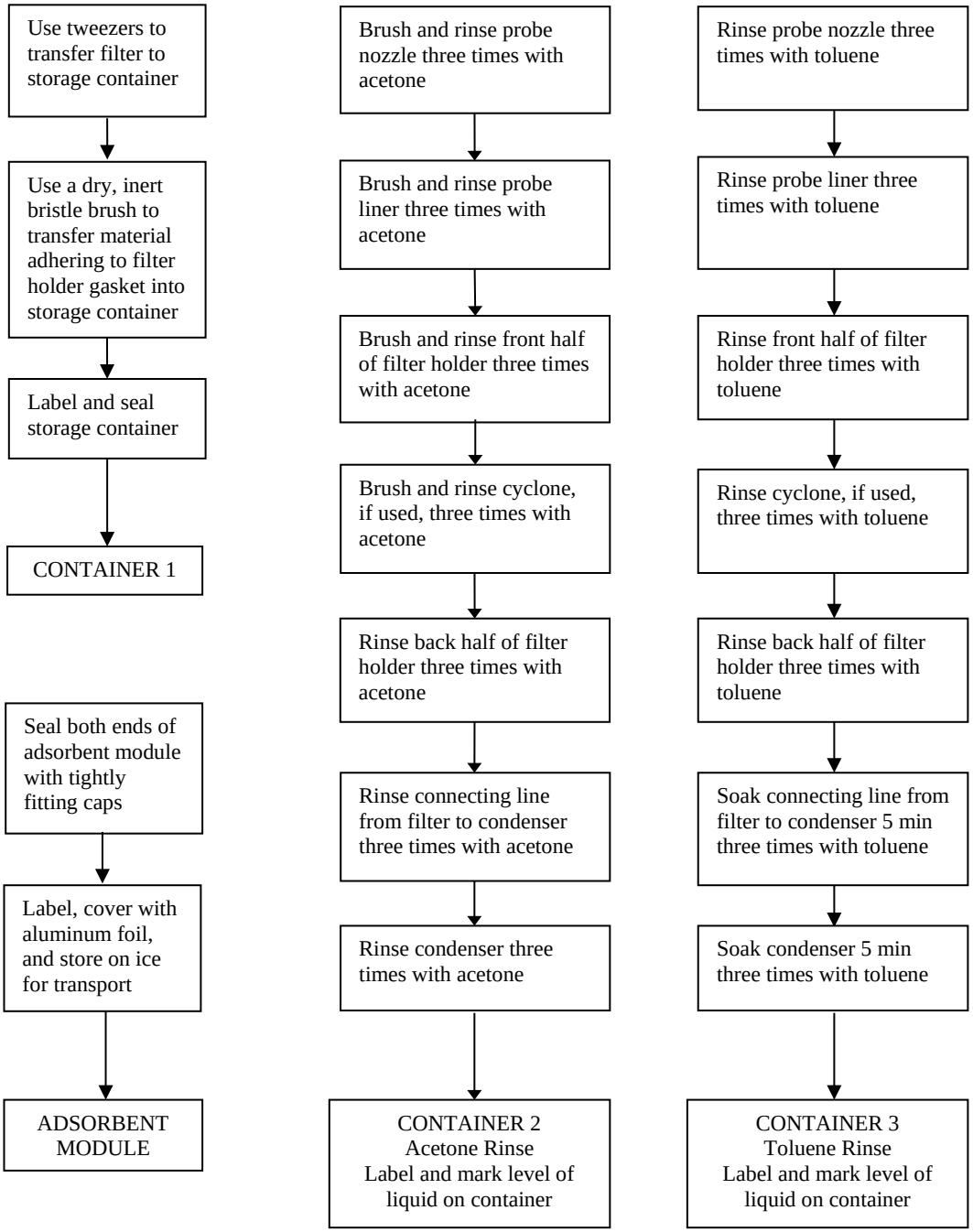

TABLE 4-1

NUMBER OF WASTE AND SPIKE SAMPLES TO BE COLLECTED AND ANALYZED

Sample	Grab Frequency	Run 1	Run 2	Run 3	Total Samples for Analysis
Liquid Waste*	Prior to test	N/A	N/A	N/A	Archived
	Beginning and end of run	2 per waste stream	2 per waste stream	2 per waste stream	
Alternate Fuel	Beginning and end of run	2	2	2	Archived
Chlorine Spike	Beginning and end of run	2	2	2	Archived

* Liquid waste feed streams will be sampled at the start and end of each run. Alternatively, wastes may be unloaded to dedicated tanks and sampled prior to the start of the test.

TABLE 4-2

NUMBER OF STACK SAMPLES COLLECTED

Sampling Train	Containers	1	2	3	FLB	RGB	Total
EPA Method 3 or 3A	Flexible bag	1	1	1			3
EPA Method 23	C1 – Filter	1	1	1	1	1	5
	Adsorbent module	1	1	1	1	1	5
	C2 – Acetone rinses	1	1	1	1	1	5
	C3 – Toluene rinses	1	1	1	1	1	5

Abbreviations:
1, 2, 3 – Run samples
FLB – field blank
RGB – reagent blank

5.0 SAMPLE HANDLING, TRACEABILITY AND HOLDING TIMES

Sample custody procedures for this program are based on EPA recommended procedures, e.g., *Quality Assurance Handbook for Air Pollution Measurement Systems, Volume III, Stationary Source Specific Methods (1977).* Since the samples will be analyzed by one or more laboratories, as well as in the field, the custody procedures emphasize careful documentation of sample collection and field analytical data, and the use of chain of custody records for samples being transported.

5.1 FIELD SAMPLING OPERATIONS

The Stack Sampling and Process Sampling Coordinators will be responsible for ensuring that the proper custody and documentation procedures are followed for the field sampling and field analytical efforts. Sampling personnel involved in sample recovery will assist them in this effort.

Samples will be collected, transported and stored in clean containers, such as polyethylene or glass jars, which are constructed of materials inert to the analytical matrix. Only containers that allow airtight seals, such as those with Teflon lined lids, will be used. Amber glass jars will be employed when containers are needed to inhibit photochemical reactions.

Samples will be labeled with a unique alphanumeric sample identification code using indelible ink, or labels pre-printed with the sample codes will be used. All sampling data, including information regarding sampling times, locations and any specific considerations associated with sample acquisition, will be recorded on pre-formatted data sheets or on the appropriate chain of custody sheet.

Figure 5-1 illustrates an example of the chain of custody sheet, which will accompany all samples not analyzed in the field during the testing program. Samples that are collected during testing will be packed for transport to the appropriate laboratories, and chain of custody forms will be included for the samples in each shipment box. Eastman personnel will maintain chain of custody for process samples as described in Section 5.2.

Samples will be stored in proper containers for transport from the field to the lab. Sample transport containers will always be secured except when in use. Samples will be placed in a secure area whenever they are left unattended. Samples requiring cold storage will be placed on ice for transport.

The Test Coordinator and the Stack Sampling Coordinator will record relevant details of field sampling operations during the test, such as start and end times of emissions sampling, interruptions of sampling for any reason (including port changes), and any problems which may arise.

5.2 CHAIN OF CUSTODY PROCEDURES

The history of each sample and its handling will be documented from its collection through all transfers of custody until it is transferred to an analytical laboratory. The laboratory will then maintain internal custody according to the laboratory's QC program.

A sample will be considered to be in a person's custody if:

- It is in one's actual physical possession;
- It is in one's view, after being in one's physical possession;
- It is locked or otherwise sealed so tampering will be evident, after being in one's physical possession; or,
- It is kept in a secure area, restricted to authorized personnel only, after being in one's physical possession.

In order to maintain and document sample possession, the following chain of custody procedure shall be implemented.

5.2.1 Field Custody Procedures

The Laboratory Analysis Coordinator will be personally responsible for the care and custody of the samples collected until they are properly transferred or dispatched. Sample labels shall be completed for each sample using waterproof ink, or pre-printed labels will be used. Any deviation will be documented in a logbook notation.

The Test Coordinator, through communication with the Quality Assurance Manager, will determine whether proper custody procedures were followed during the field work and will decide if analyses of additional samples are required.

5.2.2 Transfer of Custody and Shipment

A Chain of Custody Record will accompany all samples. The individual conducting the sampling, or preparing the samples, will sign, and note the date and time on the record. When transferring the possession of samples, the individual receiving the samples will sign and note the date and time on the record. This record will document sample custody transfer from the sampler, through any and all intermediaries, to the laboratory.

Samples will be packaged and secured properly for transportation to the laboratory for analysis, and the Chain of Custody Record identifying the samples will accompany all shipments. The original record will accompany the shipment, and the Laboratory Analysis Coordinator or designee will retain a copy of the record in a secure location. These records will be included in the final report along with the completed analytical results and raw data.

5.2.3 Analytical Operations

Analytical operations will be performed in the on-site laboratory or in an experienced contract laboratory. A contract laboratory will complete analysis of samples and blanks from the EPA Method 23 sampling train.

5.3 SAMPLE HOLDING TIMES

Table 5-1 outlines the types of samples to be collected for the testing program, the applicable sample matrix, sample container to be used, preservation technique and holding times before extraction and/or analysis. The holding times indicated on Table 5-1 begin on the day of sample collection, not on the day that samples arrive at the laboratory.

FIGURE 5-1

EXAMPLE CHAIN-OF-CUSTODY FORM

Project Number		Plant, Location, Building:	
Samples Prepared by:		Sample Temperature (if on ice):	
Sampling Location:		Storage Instructions:	

Sample ID	Sample Description	Container	Analysis	Preservation	Sampling Technique	Sampling Date & Time	Comments
						Date: Time:	
						Date: Time:	
						Date: Time:	
						Date: Time:	

Received by:	Date:	Time:
Received by:	Date:	Time:
Received by:	Date:	Time:

To be filled out by the receiving lab sample custodian:
Were all samples in good condition upon receipt? Y N
If not, please note which sample(s) and describe condition of sample(s).

TABLE 5-1

SUMMARY OF SAMPLE CONTAINERS, PRESERVATION AND HOLDING TIMES

Sample Matrix	Parameter	S/A Methods	Container(s)	Preservation	Allowable Holding Time
Stack Gas	PCDD/PCDF	EPA Method 23	Amber glass bottle, 500 or 1000 mL, with Teflon lined leak free cap	Cool to 4ºC & remove from light	30 days to extraction, 45 days to analysis
			Aluminum foil for sorbent module		
Liquid Wastes	Total Chlorine/Chloride	Archived	High density polyethylene bottle, 8-oz, w/screw cap	Cool to 4ºC	6 months
Alternate Fuel	Total Chlorine/Chloride	Archived	High density polyethylene bottle, 8-oz, with screw cap	Cool to 4ºC	6 months
Chlorine Spike	Total Chlorine/Chloride	Archived	High density polyethylene or glass bottle, 8-oz, w/ screw cap	Cool to 4ºC	6 months

6.0 CALIBRATION PROCEDURES AND FREQUENCY

6.1 SAMPLING EQUIPMENT

Sampling equipment is calibrated according to the criteria specified in the reference method being employed. In addition, Eastman follows the guidelines set forth in the *Quality Assurance Handbook for Air Pollution Measurement Systems, Volume III, Stationary Source Specific Methods* (EPA-600/4-77-027b, August, 1977). Dry gas meters, orifices, nozzles and pitot tubes are calibrated in accordance with these documents. The range of calibration is specified for environmental measurements to encompass the range of probable experimental values. This approach ensures that all results are based on interpolative analyses rather than extrapolative analyses. Calibrations are designed to include, where practical, at least four measurement points evenly spaced over the range. This practice minimizes the probability that false assumptions of calibration linearity will be made. In addition, it is common practice to select, when practical, at least one calibration value that approximates the levels anticipated in the actual measurement.

Typically, calibration frequency is dictated by the need to demonstrate the stability of the calibration value over the course of the measurements. Calibration frequency for each quality parameter is provided in Table 6-1.

Following the test program, calibrations are checked on all relevant items of sampling equipment to ensure the validity of data collected in the field according to the procedures outlined in this section.

New items of sampling equipment for which calibration is required are calibrated before initial field use. Equipment whose calibration status may change with use or time is inspected in the field before testing begins and again upon return from each field use. When an item of equipment is found to be out of calibration, it is repaired and recalibrated or retired from service. All equipment is periodically recalibrated, regardless of the outcome of these regular inspections. The frequency of recalibration is as stated in Table 6-1.

Calibrations are conducted in a manner and at a frequency that meets or exceeds EPA specifications. Eastman follows the calibration procedures outlined in the EPA Methods and those recommended within the *Quality Assurance Handbook for Air Pollution Measurement Systems, Volume III*. When these methods are inapplicable, Eastman uses methods such as those prescribed by the American Society for Testing Materials (ASTM).

Data obtained during calibrations are recorded on standardized forms, which are checked for completeness and accuracy by the Quality Assurance Manager or designee. Eastman personnel perform data reduction and subsequent calculations. Calculations are checked at least twice for accuracy. Copies of calibration forms are included in the test or project reports.

Emissions sampling equipment that requires calibration includes pitot tubes, differential pressure gauges, digital temperature indicators, dry gas meters and barometers. The following sections elaborate on the calibration procedures followed by Eastman for these items.

6.1.1 Pitot Tubes

Type S pitot tubes are verified to meet the alignment and dimension specifications in EPA Method 2. If a pitot tube does not conform to Method 2 specifications, it will not be used for testing. Once conformance to the specifications is confirmed, the pitot tube may be calibrated according to the procedure outlined in Method 2, or a baseline coefficient of 0.84 may be assigned to the pitot tube. In order to ensure that the baseline coefficient is valid, the pitot tube assembly is configured to eliminate aerodynamic interference effects as described in EPA Method 2.

Each pitot tube is inspected visually upon return from the field. If the inspection indicates damage, or raises doubt that the pitot tube remains in conformance with EPA Method 2 specifications, the alignment and dimensions of the pitot tube are measured. If necessary, the pitot tube is repaired and verified to meet Method 2 specifications.

6.1.2 Differential Pressure Gauges

Meter consoles used for stack sampling are equipped with 10-inch water column (in. WC) inclined-vertical manometers. Fluid manometers do not require calibration other than leak checks, leveling, and zeroing. Leak checks are conducted on pitot tubes and manometers before and after each run in the field. Periodic checks of manometer level and zero are conducted during each run.

6.1.3 Digital Temperature Indicator

A digital temperature indicator is used to determine temperatures of the flue gas, sample probe, filter holder oven, silica gel outlet, EPA Method 23 adsorbent module inlet, and dry gas meter. The digital temperature indicator is calibrated with the use of a signal generator, which simulates temperature signals to the temperature indicator over a range of 32° – 600°F. The calibration is acceptable if the indicated temperatures agree with the generated signals within ±1.5%.

The thermocouple and digital temperature indicator combined system is checked at ambient temperature. The check is acceptable if the agreement with a NIST-traceable temperature measurement is within 2°F.

6.1.4 Dry Gas Meter and Orifice

A calibrated wet test meter is used to calibrate the dry gas meter and orifice. The calibration procedure in EPA Method 5, section 10.3.1, is used to obtain the dry gas meter calibration factor and the orifice calibration factor.

<u>Dry Gas Meter</u>

The metering system is calibrated at the time of purchase and at least annually thereafter. During these calibrations, the meter calibration factor at each of a minimum of three orifice manometer settings shall not vary by more than 0.02 from the average of all values, to validate the average as the dry gas meter (DGM) calibration factor (Y). A post-test calibration check is performed after each field use, either according to EPA Approved Alternative Method ALT-009, or as described in EPA Method 5, section 10.3.2.

The post-test calibration check per ALT-009 passes if the average of three or more DGM calibration check values (Yqa), obtained from the test run series, is within 5% of the pre-test DGM calibration factor (Y). If Yqa differs from Y by more than 5%, then a post-test calibration check per Method 5, section 10.3.2, is performed. If the average value of the Method 5 post-test DGM calibration factor differs by no more than 5% from the pre-test Y value, the test data are acceptable. If the difference exceeds 5%, the Method 5 DGM calibration factor (pre-test or post-test) that yields the lower sample volume may be used for the test series, or the test series shall be voided.

EPA Method 5 requires the meter to be recalibrated over the full range of orifice settings when a post-test calibration check indicates that the calibration factor has changed by more than 5%.

Orifice

An orifice calibration factor is calculated for each of the orifice manometer settings during a calibration of the metering system. Each factor must be within 0.20 of the arithmetic average of all values, to validate the average as the orifice calibration factor.

6.1.5 Barometer

A reference barometer is used for all stack calculations requiring barometric pressure. This barometer reading is corrected for elevation as necessary.

6.2 ANALYTICAL INSTRUMENTS

Calibration of the analytical instruments is conducted in accordance to the procedures outlined in the EPA document entitled, *Test Methods for Evaluating Solid Waste, Physical/Chemical Methods* (EPA-SW-846) and other applicable reference methods. See Table 6-2 for information on the frequency of calibration and the calibration criteria.

TABLE 6-1

SAMPLING EQUIPMENT CALIBRATION REQUIREMENTS

Stack Gas Parameter	Quality Parameter	Method of Determination	Frequency	Criteria
Isokinetic Sampling Trains	Dry gas meter	Calibrated against a reference wet test meter at a minimum of 3 orifice manometer settings (ΔH)	Initially after purchase & annually thereafter	At each setting, Y ± 0.02 from average and ΔH@ ± 0.20 from average
		Checked either at the average ΔH value and the maximum vacuum value during the test	Post-test	Average value of calibration factor (Y) within 5% of pre-test Y
		or by Alternative Method 5 Post-Test Calibration per EPA Approved Alternative Method ALT-009	Post-test	Post-test average calibration check value (Yqa) within 5% of pre-test Y
	Metering system	Leak check	Post-test	Manometer pressure stable for 1 min
	Sampling train	Leak check	Pre/Post-test	Leak ≤ 0.02 cfm
	Probe Nozzle	3 measurements of internal diameter with micrometer to nearest 0.001 in	Pre-test	Difference between high & low numbers within 0.004 in
	Digital temperature indicators	Calibrated with signal generator	Annually	Within 1.5% of reference temperature simulated
	Thermocouple/indicators	Checked against NIST-traceable measurement at ambient temperature	Post-test	Within 2° F
	Top-loading balance	Checked vs. standard weights	Day of use	Within 0.2 g

Stack Gas Parameter	Quality Parameter	Method of Determination	Frequency	Criteria
Gas Flow	Pitot tube angle and dimensions	Measurements with a micrometer and an angle indicator	Pre-test	To specifications in EPA Method 2
	Stack gas digital temperature indicator	Calibrated with signal generator	Annually	Within 1.5% of reference temperature simulated
	Stack thermocouple/indicator	Checked against NIST-traceable measurement at ambient temperature	Post-test	Within 2° F

TABLE 6-2

ANALYTICAL INSTRUMENT CALIBRATION REQUIREMENTS

Analytical Parameter	Quality Parameter	Method of Determination	Frequency	Criteria
PCDD/PCDF (EPA Method 23)	Initial calibration	Measure 5 initial calibration solutions[1]	Initially, and if daily calibration check fails	RSD ≤ initial calibration limits for mean RF from each compound[2]; S/N ratio ≥ 2.5 for GC signal in every selected ion current profile[3]; Ion abundance ratios within control limits[4]
	Calibration check	Measure initial calibration solution #3[5]	Daily	RRF % difference from initial calibration within daily calibration limits for each compound[6]; Ion abundance ratios within control limits[7]
	Column separation check	Measure GC column performance check solution	Daily	Peaks resolved with a valley of < 25 % of the lower of the peaks for 2,3,7,8-TCDD peak from peak(s) for other TCDD isomer(s) & for 2,3,7,8-TCDF peak from peak(s) for other TCDF isomer(s)[8]
	GC retention times[8]			Retention times within 3 sec of corresponding ^{13}C-labeled standard[9]

Analytical Parameter	Quality Parameter	Method of Determination	Frequency	Criteria
Total Chlorine/Chloride (SW-846 Method 9076)	Calibration check	Analysis of standard solutions	Immediately following daily calibration, after every 10 samples, and at the end of analysis	System Recovery ≥ 85 %[10]

[1] EPA Method 23, section 6.1.1 and Table 2
[2] EPA Method 23, section 6.1.1 and Table 5
[3] EPA Method 23, section 6.1.1
[4] EPA Method 23, section 6.1.1 and Table 4
[5] EPA Method 23, section 6.1.2.1 and Table 2
[6] EPA Method 23, section 6.1.2.1 and Table 5
[7] EPA Method 23, section 6.1.2.1 and Table 4
[8] EPA Method 23, section 6.1.2.2
[9] EPA Method 23, section 5.3.2.5 criterion #2
[10] SW-846 Method 9076, section 7.3.1

Abbreviations:
GC – Gas Chromatograph
PCDD – Polychlorodibenzo-p-dioxin
PCDF – Polychlorodibenzofuran
RF – Response Factor
RRF – Relative Response Factor
RSD – Relative Standard Deviation
S/N – Signal/Noise
TCDD – Tetrachlorodibenzo-p-dioxin
TCDF – Tetrachlorodibenzofuran

7.0 ANALYTICAL PROCEDURES

Table 7-1 summarizes all sampling and analytical procedures to be used during the project. Table 5-1 lists the sample matrix, preservation, analytical method and the recommended holding times.

All of the analytical methods listed are common procedures and do not require additional definition or description. Each analytical method was selected based on matrix applicability, target analytes, detection limits, sample quantitation limits, interferences and other factors specific to the Confirmatory Performance Test.

TABLE 7-1

SAMPLING AND ANALYTICAL PROCEDURES SUMMARY

Stream	Sampling Method	Frequency of Sampling	Analytical Parameter	Analytical Method
Stack Gas	EPA Method 23	180 min, continuous	PCDD/PCDF	EPA Method 23
	CEMS	Continuous	THC	Installed CEMS
	CEMS	Continuous	O_2	Installed CEMS
Liquid Waste*	Tap	Beginning and end of run	Archived	NA
		Prior to test		
Alternate Fuel	Tap	Beginning and end of run	Archived	NA
Chlorine Spike	Tap	Beginning and end of run	Archived	NA

* Liquid waste feed streams will be sampled at the start and end of each run. Alternatively, wastes may be unloaded to dedicated tanks and sampled prior to the start of the test.

Abbreviations:
NA – Not Applicable

8.0 DATA REDUCTION, VALIDATION AND REPORTING

8.1 DATA REDUCTION

8.1.1 Field Data Reduction

Care will be exercised to ensure that hand recorded data is written accurately and legibly using prepared and conveniently formatted data recording forms so that all necessary data items are recorded properly. Calculation worksheets will be used in the field to verify isokinetic sampling conditions and to determine stack flow gas rates. The analyst and the Stack Sampling Coordinator will review the collected field data.

Data reduction will follow guidelines published in EPA Reference Methods, where applicable, and in guidance documents where EPA Reference Methods are not available. Computer programs will be used to calculate all reported values.

8.1.2 Laboratory Data Reduction

Eastman will reduce and validate the analytical data that are generated in their laboratory. The reduction of data generated at the laboratory bench will be the responsibility of the analyst producing the data. The data manipulation required to calculate sample concentrations will be performed according to the methodology described in the specific analytical method or standard operating procedure. After the analyses have been completed, a preliminary report will be generated for review by the Quality Assurance Manager (QA Manager) or designee to verify that the analyses were performed and interpreted properly and that all QA/QC criteria were met. Data failing this review will be rejected and samples re-analyzed. After review by the QA Manager or designee, the raw data will be filed by the individual responsible for the analyses and archived.

The QA Manager or designee will also review the data for adherence to the project's quality control objectives. Additionally, the data will be reviewed for the presence of outliers. An outlier is an unusually large (or small) value in a set of observations. Among the many possible reasons for outliers are:

- Faulty instruments or component parts
- Inaccurate reading of a record

- Errors in transcribing data
- Calculation errors
- Statistical variation resulting from inherent random error

Real-time analytical measurements will be recorded on pre-printed laboratory bench summary sheets unless computer generated summaries are produced. Electronic spreadsheet calculation routines will be used where applicable and result printouts will be attached to the bench summary sheet. The reported data will be verified by the QA Manager or designee for completeness.

8.1.3 Blank Correction Procedures

If a blank correction procedure exists for a particular stack sampling or analysis method, that procedure will be used. If a blank correction procedure does not exist, or contamination appears only in field blank samples, the following blank correction procedure may be used. The blank correction procedures are presented in Section 2.5.1 of the handbook, *Hazardous Waste Incineration Measurement Guidance Manual, Volume III of the Hazardous Waste Incineration Guidance Series* (EPA/625/6-89/021, June 1989).

- Assemble data for each analyte from all of the field and trip blanks.
- Determine whether the field blanks are statistically different from the trip blanks by using the paired t-test.
- If the field blanks are significantly higher than the trip blanks, use the field blank data only. If the blanks are not significantly different, use all of the blank values. Higher field blanks indicate background due to field exposure, which trip blanks do not measure.
- Calculate the average and standard deviation of the blanks.
- Determine whether or not each measured sample value is different from the blank value by using the following test for each sample:
    - s = sample value (µg)
    - b = blank average + 3 x standard deviation of blanks (µg)

- If “s” is greater than “b,” then the sample is different from the blanks. If the measured sample value is different from the blank value, then the blank correction procedure is applied:
    - Blank corrected emission value (µg) = Measured sample value (µg) – Average blank value (µg)
- If the measured sample value is not different from the blank value, then the measured sample is used as an upper bound emission value and the emission value is considered not to exceed the measured value. This results in the reporting of emission concentration with a “less than” (<) sign.

8.2 DATA VALIDATION

Data validation is the process of accepting or rejecting data based on sound criteria. Project coordinators and QC personnel will use validation methods and criteria appropriate to the type of data and the purpose of the measurement. The data from field sampling activities and from laboratory analyses will be reviewed for completeness and comparability. Field sampling data will be validated by the Stack Sampling Coordinator based on judgment of the representativeness of the sample, the maintenance and cleanliness of sampling equipment and the adherence to an approved, written sample collection procedure. The Stack Sampling Coordinator will review the field data and the calculated results. The Laboratory Analysis Coordinator and the Quality Assurance Manager will perform the same function for laboratory data and results.

Records of all data will be maintained, even those judged to be of “outlying” or suspicious. The person(s) validating the data will have sufficient knowledge of the technical work to identify questionable values.

All laboratory data (100%) will be validated according to the criteria discussed in this QAPP. Eastman uses the results from field blanks, laboratory method blanks, replicate samples, and internal QC samples to further validate analytical results. Analytical results on field blanks and replicate field samples are valuable for validation of sample collection as well.

The following criteria will be used to evaluate the field sampling data:

- Use of approved sampling procedures
- Proper operation of process being tested
- Use of properly operating and calibrated equipment
- Leak checks conducted before and after sampling
- Use of reagents that conform to QC specified criteria
- Use of NIST-traceable calibration gases
- Proper chain of custody maintained
- Sample trains – proper sample gas volume collected

The criteria listed below will be used to evaluate the analytical data:

- Use of approved analytical procedures
- Use of properly operating and calibrated instrumentation
- Acceptable results from analyses of QC samples

Precision and accuracy achieved should be comparable to that achieved in previous analytical programs and consistent with objectives stated in Sections 1 and 3 of this QAPP.

8.3 DATA REPORTING

The concentrations for the compounds of interest will be presented in the final report in the units set forth by the analysis method and/or guidance documents. Copies of this report will be filed with Eastman Chemical Company and will remain on file for a minimum of five years following conclusion of the Confirmatory Performance Test.

8.3.1 Report Contents

Copies of the test report will be submitted to all parties after the test series has been completed. Results reported will include, but will not be limited to, concentrations of gaseous pollutants, the method detection limits, the estimated quantitation limits where appropriate, liquid stream constituent determinations, and any other type of data that is required. This report will also include a list of personnel present during testing, a summary of results, descriptions of test

procedures used, a description of the source and its operation during testing, test location drawings, example calculations, raw field data and equipment calibrations.

The Confirmatory Performance Test Report will include a discussion of any anomalies in QA/QC results. Analytical QA/QC results will be summarized in a Sampling and Analysis report, which will be appended to the Confirmatory Performance Test Report. Other pertinent QA/QC data, e.g., calibration records and chain-of-custody records, will be included in appropriate sections of reports generated by individual organizations involved in the test, e.g., by on-site and contract stack sampling groups, and by on-site and contract laboratories. Reports from each such organization will be appended to the Confirmatory Performance Test Report.

9.0 INTERNAL QUALITY CONTROL CHECKS AND FREQUENCY

Internal quality control procedures are routine internal operations for assuring that the data output of a measurement system meets prescribed criteria for data quality. Quality control checks will be performed to ensure the collection of representative samples and the generation of valid analytical results for these samples. The QA objectives are specified in Section 3; the current section describes how these specifications will be met. Quality control checks will be performed by project participants throughout the program, under the guidance of project coordinators and QC personnel.

9.1 DATA COLLECTION AND SAMPLING QC CHECKS

Checks for the data collection and sampling aspects of this program will include, but will not be limited to, the following:

- Use of standardized field data sheets to ensure accuracy and completeness, traceability, and comparability of the process information and samples collected.
- Field checking of standardized forms by a second person to ensure accuracy and completeness.
- Strict adherence to the sample traceability procedures outlined in Section 5 of this QAPP.
- Submission of field blanks.
- Leak checks of sample trains before and after sample collection.

9.1.1 Sampling Equipment Operational QC Checks and Frequency

Calibration of field sampling equipment will be performed prior to and at the conclusion of the field sampling effort. Copies of the calibration sheets will be available for reference during testing, and will be placed in the project file. Acceptance limits for calibrations are presented in Section 6. Calibration will be performed as described in the following EPA publications: *Quality Assurance Handbook for Air Pollution Measurement Systems, Volume III, Stationary Source Specific Methods*; and *Test Methods for Evaluating Solid Wastes, Physical/Chemical Methods*.

Each method used to conduct stack gas sampling specifies quality control procedures to be performed prior to, during, and after sampling. Certain QC procedures are common to all isokinetic sampling methods and are discussed immediately below, followed by a discussion of QC procedures specific to EPA Method 23.

QC procedures common to all isokinetic stack gas sampling methods

Laboratory Preparation

- Sampling equipment will be maintained and calibrated according to the procedures described in EPA Method 5.
- Filters will be visually inspected for irregularities and flaws, or pinhole leaks.
- Filters will be placed in sealed shipping containers or in sealed filter holders, and will remain in these containers at all times whenever the filters are not in the laboratory.
- Glassware openings where contamination could occur will be covered, and will remain covered until the sampling train is assembled.

Sampling Train Preparation and Assembly

- Train preparation and assembly will be conducted in a clean area, free of excessive dust and other contaminants.
- Containers to be used during sampling and recovery will be stored in clean locations, free from uncontrolled dust and other contaminants.
- After assembling the filter holder, the filter will be checked for tears.
- Probe markings corresponding to each traverse point will be verified.
- The nozzle size needed to maintain an isokinetic sampling rate at all traverse points will be determined.
- The sampling train will be visually inspected for proper assembly.
- The meter box and sampling pump will be examined for proper operation.
- The manometer will be leveled and zeroed.
- The thermocouples will be tested to verify that they are reading correctly.
- The size and orientation of the nozzle will be verified.
- Pre-test leak checks of pitot lines and of the sampling train will be performed.

During Sampling

- Prior to insertion of the train, the sampling ports will be cleaned to prevent sampling any material deposited in the ports.
- The pitot tubes and sampling probe will be checked to ensure that they are properly oriented.
- The filter and probe temperatures will be checked to ensure that the heating systems are operating at the specified temperatures.
- Filter vacuum will be monitored, and checked for sudden changes.
- An isokinetic sampling rate within 90 – 110% will be maintained.
- The temperature at the outlet of the final (silica gel) impinger will be maintained at less than 20 °C.
- Periodic checks will be made on the manometer level and zero during testing, as these may drift due to vibrations and temperature changes.
- Leak checks of pitot lines and of the sampling train will be conducted before and after each port change.

After Testing

- Post-test leak checks will be performed on the pitot lines and the sampling train.
- The sampling train, including the nozzle and pitot tubes, will be inspected for visual defects.

QC procedures specific to EPA Method 23

Laboratory Preparation:

- All glass components of the sampling train, upstream of and including the adsorbent module, will be cleaned as described in EPA Method 23.
- A quality control check will be conducted on the XAD-2 resin as described in EPA Method 23. A method blank on the same lot of resin may serve this purpose.
- The XAD-2 resin and the glass wool plug used in the adsorbent module will be cleaned as described in EPA Method 23.

- All filters used will be cleaned as described in EPA Method 23.

Sampling Train Preparation and Assembly:

- All openings on the train where contamination could occur will be covered with Teflon tape, ground glass caps, or aluminum foil until just prior to assembly, or until sampling is about to begin.

During Sampling:

- The temperatures around the probe and filter holder will be maintained at 120 ± 14 °C.
- Periodically, the connecting glassware from the probe to the filter, and to the condenser, will be checked for water condensation.
- The temperature at the inlet of the adsorbent module will be maintained at 20°C or less.

After Testing:

There are no "after testing" QC procedures specific to EPA Method 23 beyond those common to all isokinetic sampling methods, listed above.

QC checks for volumetric air flow rate determinations

Stack Gas Velocity: Data required to determine stack gas velocity will be collected using the methodology specified in EPA Method 2. Quality control procedures are as follows:

- Verify the location of each sampling traverse point before taking measurements.
- Visually inspect the pitot tube before and after sampling.
- Leak-check both legs of the pitot tube before and after sampling.

Stack Gas Molecular Weight: Samples to be used for determination of stack gas molecular weight will be collected using the sampling technique specified in EPA Method 3. Quality control will focus on the following procedures:

- The sampling port will be properly sealed to prevent air in-leakage.
- The sampling train will be purged prior to sample collection.
- Each traverse point will be sampled for an equal length of time.

Moisture Content: The moisture content of the gas stream will be determined using the technique specified in EPA Method 4. The following QC checks will be performed:

- The sampling train will be leak-checked before and after each run.
- Ice will be replenished in the ice bath throughout each run.

9.1.2 Sample Collection QC Checks and Frequency

Field blanks of EPA Method 23 acetone and toluene rinses, filter, and adsorbent module will be obtained in the field and handled in the same way as emissions samples to provide a QC check on sample recovery.

For the test program, sample collection QC checks for emissions sampling and process sampling, and the frequency for collecting or preparing blanks, are listed below.

- Laboratory blanks will be prepared according to method protocol.
- Reagent blanks will be prepared for EPA Method 23.
- Field blanks will be prepared for EPA Method 23.

Laboratory method blanks will also be used with the gas sample methods that use absorption or adsorption media. Procedures for blank correction are discussed in Section 8.1.3.

9.2 ANALYTICAL QC CHECKS

Laboratory analysis methods make use of a number of different types of QC checks to ensure the validity of the data being generated. QC activities are documented as part of the analysis. Table 9-1 summarizes the QC checks to be performed during each analysis as part of the test program. Some are detailed below.

9.2.1 Laboratory Quality Control Samples and Blanks

Method Blanks

Method blanks contain all of the reagents used in the preparation and analysis of samples and are processed through the entire analytical scheme to assess spurious contamination arising from reagents, glassware, and other materials used in the analysis.

Calibration Blank

This blank is a standard used for calibration that is void of all analytes. Calibration blanks are used periodically to check for carryover contamination.

Calibration Check or Verification Sample

This sample is one of the working calibration standards or a standard prepared from the same stock solutions as the calibration standards. Calibration check or verification samples are used periodically to check that the original calibration is still valid.

Laboratory Control Sample (LCS)

This sample is prepared or purchased from a source independent from that used for the calibration standards. An LCS is used to establish that an instrument or procedure is in control. An LCS is normally carried through the entire sample preparation and analysis procedure.

Matrix Spike

This sample is prepared by spiking a known amount of analyte(s) into one sample in a batch. The spiked sample is carried through the entire analytical process. Recovery of the spiked analyte(s) is a measure of accuracy.

Duplicate

A duplicate sample is prepared from another portion of a sample in the same batch. Both portions are carried through the entire analytical process. Comparison of the results through calculation of relative percent difference is a measure of method precision. Often, duplicate spiked samples are analyzed to gauge precision and accuracy of measurable concentrations.

9.2.2 Laboratory Data Evaluation

The relative percent difference and the percent of recovery of each applicable QC check will be calculated as noted in Section 11. Any values that fall outside the QC limits for the analytical method will be noted. Eastman anticipates that some of the recovery values may be outside the QC limit owing to matrix interferences. The following guidelines will be used:

- Recovery data are evaluated to determine if the QC limits are appropriate or if a problem may exist even though the limits are being achieved (e.g., one compound consistently is barely within a QC limit).
- Recovery data that are outside the established limits are evaluated. The evaluation will include an independent check of the calculation.
- Corrective action will be taken based on the failure to meet the applicable method performance criteria.

The following general QC procedures will be incorporated into the analytical effort:

- A secondary review of the analytical data and QC data will be conducted for completeness and acceptability.
- Analytical QC data will be tabulated using the appropriate charts and forms.
- Hard copy raw data (e.g., chromatograms, computer printouts, etc.) and hard copy forms generated during the analytical process will be maintained in the project file.

The results of these quality control procedures will be included in the final report.

TABLE 9-1

QUALITY CONTROL VALIDITY CHECKS

Analytical Parameter	Quality Parameter	Method of Determination	Frequency	Criteria
PCDD/PCDF (EPA Method 23)	Accuracy	Internal standards recovery	Each sample	Tetra-Hexa: 40 – 130 % Hepta-Octa: 25 – 130 %
		Surrogate standards recovery	Each sample	70 – 130 %
	Method blank	Analysis of a method blank	Following a calibration run and prior to the first sample run, and for each group of up to 20 samples	Project-specific acceptance criteria
Total Chlorine/Chloride (SW-846 Method 9076)	Quality Control Check	Analysis of a LCS	Beginning and end of run and every 10 samples	Recover 85-115% of known value
	Accuracy/Precision	Analysis of a matrix spike and duplicate	With each analytical batch	Recover 80-120% of known value RPD ≤ 10%

Abbreviations
LCS – Laboratory Control Sample
RPD – Relative Percent Difference

10.0 PERFORMANCE AND SYSTEM AUDITS

EPA Guidance recommends that internal audits be conducted by the Quality Assurance Manager or designee. These audits include performance and system audits of field and laboratory activities. Performance and system audits are routine elements of Eastman QA/QC programs, and they are used as independent checks on the quality of data obtained from sampling and analysis activities. Either type of audit may show the need for corrective action or invalidate test project data.

10.1 SYSTEM AUDITS

System audits are qualitative evaluations of components of field and laboratory quality control measurement systems to determine if the measurement systems are being used appropriately. The audits may be carried out before the systems are operational, during the program, or after the completion of the program. Such audits typically involve a comparison of the activities given in the QAPP with those actually scheduled or performed.

The laboratory staff conducts system audits of the laboratory on a regular basis and reports to the Quality Assurance Manager, as conditions require.

For the emissions sampling associated with this project, an on-site qualitative inspection and review of each sampling system will be performed by the Stack Sampling Coordinator.

The system audit will include observation and recording of the following activities:

- Sample train assembly and leak-checks.
- Post-test leak-checks and sample train disassembly.
- Sample recovery, labeling and storage for shipment.

Eastman will perform any applicable audit requested by the regulatory agencies.

10.2 PERFORMANCE AUDITS

A performance audit is a procedure to analyze "blind" samples, the content of which is known, simultaneously with the analysis of Confirmatory Performance Test samples. The purpose of a performance audit is to check bias in the measurement of compounds or parameters in the test sample, i.e., to check whether the laboratory is measuring the right compound or parameter with an acceptable degree of accuracy. Performance audits check data quality at the time of the analysis and they are specific to the equipment and personnel involved with the test.

In addition to system audits, performance audits (if applicable) of the laboratory are conducted by providing independent samples for analysis. Audit materials include materials available from private companies accredited to supply samples for the U.S. EPA's stationary source audit program, or materials specially prepared by the Quality Assurance Manager. Eastman will acquire an audit sample for any analyte being determined by an EPA Method during this Confirmatory Performance Test for which audit samples are available from two accredited providers, provided that the analyte and EPA Method is listed on the EPA Emission Measurement Center website 60 days before commencing the test. Each such audit sample will be obtained and analyzed in accordance with EPA's stationary source audit program.

11.0 CALCULATION OF DATA QUALITY INDICATORS

This section describes the procedures and equations that will be used to determine the precision, accuracy, and completeness of measured parameters. The determination of method detection limits is also discussed.

11.1 PRECISION

When sufficient data is available, precision is determined through the analysis of replicate or replicate spiked samples and is expressed as relative percent difference (RPD), range percent (RP), or relative standard deviation (RSD). If the number of data points is less than four, precision is expressed as relative percent difference or range percent:

$$RPD \text{ or } RP = 100 \times (X_1 - X_2) / X$$

where: X_1 = highest value

X_2 = lowest value

X = arithmetic mean

The following equations are used when four or more measurements are made:

$$RSD = 100 \times (s / X)$$

where: s = standard deviation

X = arithmetic mean

Standard deviation will be determined as follows:

$$s = [(\sum x_i^2 - (\sum(x_i)^2/n)) / (n-1)]^{1/2}$$

where: x_i = ith value of x (individual measurement)

n = number of measurements

11.2 ACCURACY

Accuracy will be estimated from the analysis of matrix spiked samples and/or laboratory control samples, and will be expressed as a percent recovery or as relative error. The formulas to calculate the percent recovery and relative error are as follows:

Percent Recovery (%R) = 100 x (Measured Value / True Value)

%R = 100 x [(Measured Spike Value - Measured Sample Value) / Spike Value]

Relative Error = 100 x (Measured Value - True Value) / (True Value)

When the calculated percent recovery is used to correct the measured values for a batch of data, the following equation will be used:

Corrected Value = 100 x [Measured Non-spiked Value / Percent Recovery]

11.3 COMPLETENESS

Completeness will be reported as the percentage of all measurements whose results are judged to be valid. The procedures to be used for validating data and for determining outliers are contained in Section 8. The following formula will be used to estimate completeness:

$$C = 100 \times (V / T)$$

where: C = percent completeness

V = number of measurements judged valid

T = total number of measurements

11.4 METHOD DETECTION LIMIT

The method detection limit is verified periodically (e.g., annually) for analytical measurements using the statistical procedures given in 40 CFR 136, Appendix B. The method detection limit (MDL) is defined as:

$$MDL = t_{(n-1,\ 1-\alpha = 0.99)} \times S$$

where: S = standard deviation of the replicate analyses

$t_{(n-1,\ 1-\alpha = 0.99)}$ = Student's t-value appropriate to a 99% confidence level and a standard deviation estimate with n-1 degrees of freedom.

12.0 PREVENTATIVE MAINTENANCE

Well-maintained equipment is a very important factor in assuring the quality and completeness of measurement data. Measurements conducted in the field are more sensitive to the degree of equipment maintenance than are measurements conducted within a laboratory setting, because the former are often performed in an uncontrolled dynamic environment.

All equipment used in emission testing measuring systems must be maintained in good operating order. To achieve this objective, a routine preventive maintenance program is necessary. Procedures used in this program follow those outlined in *Maintenance Calibration and Operation of Isokinetic Source Sampling Equipment, Publication No. APTD-05-76* and in the *Quality Assurance Handbook for Air Pollution Measurement Systems, Volume III, Stationary Source Specific Methods.*

Eastman minimizes the potential impact of equipment malfunction on data completeness through two approaches:

- Implementation of an in-house maintenance program, and
- Distribution of backup equipment on sampling projects.

An in-house equipment maintenance program is part of routine operations. The maintenance program's strengths include:

- Trained technicians experienced in the details of equipment maintenance and fabrication,
- Adequate spare parts inventory, and
- The availability of tools and specialized equipment.

The second approach is based upon equipment redundancy. Backup equipment, spare parts and tools are included in the inventory of materials readily available for each sampling project. This approach allows the sampling team to respond to equipment breakage or malfunction in a timely fashion, thereby minimizing lost data and lost time.

For field equipment, preventive maintenance schedules are based on the results of routine inspections and on accumulated experience. Maintenance schedules for continuous emissions monitors follow manufacturer's recommendations.

12.1. SAMPLING EQUIPMENT INSPECTION AND MAINTENANCE

Each item of field test equipment is assigned a unique, permanent identification number. Each item of equipment returning from the field is inspected before it is returned to storage. During the course of these inspections, equipment is cleaned, repaired, reconditioned and recalibrated as necessary. Each item of equipment is also inspected again before being transported to the field to detect any equipment problems that may originate during periods of storage. This minimizes lost time during the sampling project due to equipment failure.

12.2. LABORATORY ANALYTICAL INSTRUMENT MAINTENANCE

The policy of each laboratory is to follow the manufacturer's recommended schedule for maintenance and/or to have service contracts for its major instruments. These contracts provide for routine preventive maintenance as well as for repair service. The terms for each contract vary. Additionally, the laboratory maintains an inventory of expendable parts and supplies to minimize downtime and to allow laboratory personnel to make minor repairs as necessary. Maintenance and repair activities are recorded in instrument specific log books maintained in the individual’s laboratories.

13.0 CORRECTIVE ACTION

Any samples not collected according to the proper methods will be considered for invalidation. Any equipment found to be out of calibration or not operating properly will be repaired or replaced before additional measurements are made.

If weaknesses or problems become apparent during system or performance audits, corrective action will be initiated promptly. Examples of corrective actions that may be taken are recalibration of instruments using freshly prepared calibration standards, and replacement of reagents that give unacceptable blank values.

Should performance audits indicate that any methods are out of control, the Quality Assurance Manager (QA Manager) and Laboratory Analysis Coordinator will review the audit data and determine the appropriate action to be taken. Independent calibration checks will be used, if necessary, to resolve problems with an analytical system.

In all cases where standard procedures cannot resolve the problem, the QA Manager and the Laboratory Analysis Coordinator will determine the appropriate action. The Laboratory Analysis Coordinator has daily contact and detailed familiarity with the procedures. The QA Manager offers a broader background and more detached viewpoint. This combination helps in formulating quick and reliable solutions to various problems. The Laboratory Analysis Coordinator will be responsible for initiating the action and the QA Manager will be responsible for determining if this action has resolved the problem.

Corrective action during the field sampling portion of a program is most likely to result from equipment failure or an operator error, and may require repeating a run. When equipment is discovered to be defective, e.g., during pre-test or post-test leak checks, the equipment is repaired or replaced. A correction factor may be established per the appropriate EPA method, or the run may be repeated. Operator error is minimized by having field crew members audit each other's work before and after a test. Every effort is made by the Stack Sampling Coordinator to ensure that QC procedures are followed. Economically, it is preferred to repeat a run during a particular field test rather than to conduct further testing at a later date.

Corrective action for analytical work may include recalibration of instruments, reanalysis of known QC samples and, if necessary, reanalysis of field samples. If the problem is not solved in this manner, more formalized long-term corrective action may be necessary.

The need for this action may be identified by standard QC procedures, control charts, and/or performance or system audits. Any quality problem that cannot be solved by immediate corrective action falls into the long-term category. Eastman uses a corrective action process that ensures that the condition is reported to the responsible party, who is part of a closed-loop action and follow-up plan.

The essential steps in the closed-loop corrective action process are:

- Identify and define the problem.
- Assign responsibility for investigating the problem.
- Investigate and determine the cause of the problem.
- Determine a corrective action to eliminate the problem.
- Assign and accept responsibility for implementing the corrective action.
- Establish an effectiveness measure of the corrective action and implement it.
- Verify that the corrective action has eliminated the problem.

Information critical to the analysis and resolution of the problem is maintained on-site.

14.0 QUALITY ASSURANCE REPORTS TO MANAGEMENT

Final stack sampling project reports contain sections that describe QA/QC activities and criteria relevant to the measurements reported, provide results from the application of these activities, and address the impact of these results on the measurements reported. The QA procedures used in this test program generate sufficient documentation to indicate data quality. The individuals responsible for QA reports are those listed in Section 2 who provide QA results. At a minimum the following QA results will be addressed in the final report:

- Precision
- Percent recovery of matrix and/or surrogate spikes
- Blanks
- Sampling and analysis equipment calibration
- Cylinder gas audits and on-site equipment audits
- Spike composition verification and recovery checks
- Changes or deviations from the QAPP
- Discussion of whether QA objectives were met, and the resulting impact on decision making
- Corrective actions taken that affect the project's data quality.

Management reviews all evidence of the execution of the QA guidelines. Emissions testing and laboratory groups participate in independent audit checks. Subcontracting laboratories will report QC data to Eastman, as an inclusion to their data summary package.

Continuous Monitoring System (CMS) Performance Evaluation Test Plan for The Rotary Kiln Incinerators

Tennessee Operations
Eastman Chemical Company

September 2020

TABLE OF CONTENTS

1.0 INTRODUCTION 1

2.0 PERFORMANCE EVALUATION OBJECTIVES 3

3.0 PERFORMANCE EVALUATION TEST PLAN OBJECTIVES 4

4.0 CONTINUOUS MONITORING SYSTEM (CMS) DESCRIPTION 5

4.1 CONTINUOUS EMISSION MONITORING SYSTEM (CEMS) 5

4.1.2 O_2 CEMS 7

4.1.3 THC CEMS 7

4.1.4 Data Recording 7

4.2 CONTINUOUS PARAMETER MONITORING SYSTEM (CPMS) 9

5.0 PERFORMANCE EVALUATION PROGRAM SUMMARY 10

5.1 CONTINUOUS EMISSION MONITORING SYSTEM (CEMS) CALIBRATIONS 10

5.1.1 Calibration Error Test Procedure 10

5.1.2 Response Time Test Procedure 10

5.1.3 Relative Accuracy Test Procedure 11

5.2 CONTINUOUS PARAMETER MONITORING SYSTEM (CPMS) CALIBRATIONS 11

5.3 AWFCO SYSTEM INTEGRATION AND TESTING 13

5.4 INSTRUMENT LOCATION 13

5.5 DATA QUALITY OBJECTIVES 13

6.0 TEST SCHEDULES 14

7.0 QUALITY ASSURANCE 14

7.1 INTERNAL QA 14

7.2 EXTERNAL QA 15

8.0 DOCUMENTATION 16

LIST OF TABLES

TABLE 4-1 PERMANENTLY-INSTALLED THC & O_2 CEMS SPECIFICATIONS 6

TABLE 4-2 APPLICABLE CPMS 8

TABLE 5-1 APPLICABLE CPMS CALIBRATIONS 12

1.0 INTRODUCTION

Tennessee Operations of Eastman Chemical Company (Eastman) owns and operates three hazardous waste incinerators at its facility in Kingsport, Tennessee. One is a liquid chemical destructor. Two are rotary kiln incinerators (RKIs) that treats solid and liquid wastes. These incinerators are subject to the National Emission Standards for Hazardous Air Pollutants (NESHAP) from Hazardous Waste Combustors promulgated as 40 CFR Part 63 Subpart EEE. This standard is commonly referred to as the Hazardous Waste Combustor Maximum Achievable Control Technology (HWC MACT) standard.

To demonstrate compliance on an on-going basis, the HWC MACT rule requires that the specified operating parameters be monitored on a continuous basis and that results be recorded in the facility operating record. Continuously monitored operating parameters include temperatures, pressures, pH, voltages, amperages and flowrates. Systems used to continuously monitor these operating parameters are referred to in this document as Continuous Parameter Monitoring Systems (CPMS).

The HWC MACT rule also requires that stack emissions of carbon monoxide or total hydrocarbons (THC) and oxygen (O_2) be continuously monitored. Systems to monitor these stack emissions are referred to as Continuous Emission Monitoring Systems (CEMS).

Collectively, the CPMS and CEMS are referred to as Continuous Monitoring Systems (CMS). The HWC MACT rule requires facilities to demonstrate compliance with the dioxin/furan standard by means of a Confirmatory Performance Test. A CMS performance evaluation is required in conjunction with the Confirmatory Performance Test to ensure accuracy of continuous monitoring systems (CMS) required for dioxin/furan compliance, as specified by §63.1209(k).

The HWC MACT rule requires incinerator operators to submit a CMS performance evaluation plan to the agency for approval [63.1207(e)(1)(ii)]. In this document, Eastman is submitting a CMS performance evaluation plan for the RKI. Separately, Eastman is submitting a Confirmatory Performance Test plan for the RKI. Eastman requests agency approval of these

two test plans. Pending agency approval of this test plan and the Confirmatory Performance Test plan, Eastman will commence the CMS performance evaluation approximately November 23, 2020. Specifically, Eastman intends to perform the Oxygen CEMS Relative Accuracy Test on November 24, 2020.

2.0 PERFORMANCE EVALUATION OBJECTIVES

The purpose of the CMS performance evaluation test is to ensure that CMS instruments used to gather data relating to the dioxin/furan emission standard during the Confirmatory Performance Test are properly calibrated and generate valid data. To verify the accuracy of an instrument, Eastman will demonstrate that the instrument meets either the performance specification promulgated by EPA or the manufacturer's recommended specification if an appropriate performance specification has not been promulgated. The performance evaluation program summary is discussed in more detail in Section 5.0.

3.0 PERFORMANCE EVALUATION TEST PLAN OBJECTIVES

Pursuant to §63.1207(e) of the HWC MACT rule, Eastman must develop and submit a site-specific CMS performance evaluation test plan for approval by the Administrator. The purpose of the CMS performance evaluation test plan is to provide a synopsis of the methods and procedures that will be used to verify that the monitoring devices included in the CMS are calibrated and collecting valid data during the Confirmatory Performance Test.

In accordance with §63.1207(b)(2), only CMS relating to the dioxin/furan compliance assurance are included in this CMS performance evaluation test plan. Applicable CMS include the following:

- Combustion gas flow;
- Combustion temperature;
- Hazardous waste feedrate; and
- Total hydrocarbon and oxygen CEMS.

The objectives of this CMS Performance Evaluation Test Plan are to:

- Describe the applicable continuous monitoring systems;
- Outline the methods and procedures that will be used to calibrate the CMS;
- List the data quality objectives; and
- Present the internal and external quality assurance program.

4.0 CONTINUOUS MONITORING SYSTEM (CMS) DESCRIPTION

General descriptions of the applicable RKI CEMS and CPMS are presented below.

4.1 Continuous Emission Monitoring System (CEMS)

Stack gas compliance monitoring is conducted continuously for total hydrocarbons (THC) and oxygen (O_2) with permanently-installed CEMS. The RKI CEMS consists of analyzer systems for oxygen and total hydrocarbons, which share a common sampling train and meet all of the performance specifications detailed in Performance Specifications 4B (for O_2) and 8A (for THC) in Appendix B of 40 CFR Part 60, as well as the Appendix to Subpart EEE of Part 63 – *"Quality Assurance Procedures for Continuous Emissions Monitors Used for Hazardous Waste Combustors."*

During normal operation of the RKI, the THC and O_2 CEMS:

- Continuously measure, display, and record the gas concentrations in the stack, and
- Activate alarms, and interrupt waste feed when preset values are exceeded.

Additionally, the CEMS performs the following functions:

- Remotely displays stack gas composition and CEMS operational status, and
- Performs calibration of sampling and analysis trains, both automatically and manually.

The sampling location for the THC and O_2 CEMS is in the ductwork between the ID fan and stack. Specifications for the permanently-installed THC & O_2 CEMS are presented in Table 4-1.

During the Confirmatory Performance Test, the permanently-installed THC CEMS will be used to measure and record stack concentrations of THC to demonstrate compliance with the 10 ppmv THC emission limit specified at 63.1219(a)(5)(ii). The permanently-installed O_2 CEMS will be used during the Confirmatory Performance Test to measure and record stack O_2 concentrations. Measured O_2 levels will be used to correct measured THC concentrations to a normalized 7% O_2 level, as required by HWC MACT.

Table 4-1

Permanently-Installed THC & O_2 CEMS Specifications

Component Manufacturer:	
Total Hydrocarbons	California Analytical Instruments Model 600 HFID, Flame Ionization Detector or equivalent
Oxygen	Servomex, Model 1440 Paramagnetic Analyzer
Gas Measurement Ranges:	
Total Hydrocarbons	0-100 ppmv, as propane
Oxygen	0-25% oxygen
System Measurement Accuracy:	
Total Hydrocarbons	± 3% Full Scale
Oxygen	0.5% absolute
Response Time:	
Total Hydrocarbons	≤ 2 minutes
Oxygen	≤ 2 minutes
Calibration Drift: (24 hours)	
Total Hydrocarbons	≤ 3% Full Scale
Oxygen	≤ 0.5% absolute
Calibration Error:	
Total Hydrocarbons	≤ 5% Full Scale
Oxygen	≤ 0.5% absolute

4.1.1 Sampling System

A sampling system provides a dry, particulate-free gas sample to the oxygen analyzer and a wet, particle-free gas sample to the THC analyzer. The gas sample used for oxygen analysis is conditioned by passing it through a refrigerated condenser, a filter, a diaphragm pump, a second refrigerated condenser and a final back-up filter. The condensers remove condensable moisture from the sample. A Teflon sample line is used to provide the gas sample to the analyzers. The temperature of the sample line is maintained at 220 to 250°F in order to prevent condensation prior to entry into the gas conditioning system. After having passed through this system, the gas is clean, dry and ready for oxygen analysis. Hot gas from the sample line is analyzed for total hydrocarbon without sample conditioning.

4.1.2 O_2 CEMS

Oxygen is monitored using a Servomex, Model 1440 Oxygen Analyzer, or equivalent. The Model 1440 utilizes the physical paramagnetic measurement technique. This monitor operates on a full-scale range of zero to 25 percent O_2.

4.1.3 THC CEMS

Total hydrocarbon will be measured using a California Analytical Instruments Model 600 HFID, Flame Ionization Detector, or equivalent, that uses flame ionization detection for analysis of total hydrocarbons present in a gaseous sample. A gas sample will be extracted from the source through a heated probe and sample line and conveyed to the THC analyzer as described in Section 4.1.1 The instrument will have a range of 0-100 ppm, as propane.

4.1.4 Data Recording

Control and recording of the CEMS output are managed by two systems: the datalogger and the distributed control system (DCS). Data from each analyzer are stored on a data logger, and the datalogger controls the daily automatic calibration sequence for each analyzer. The calibration results are stored on the datalogger. Daily calibration reports are printed, signed and dated by the Environmental Instrument Analyst (EIA) on duty. These reports are then filed with the CEM system.

Table 4-2

Applicable CPMS

Measurement	Related Operating Parameter Limit(s)	Instrument	Instrument Range	Instrument Location
Combustion chamber exit temperature (°F)	Minimum combustion chamber outlet temperature	Type K Metal Thermocouple	0-2500 °F	Exit of kiln
Stack gas flowrate (acfm)	Maximum combustion gas flowrate	McCrometer V-Cone® Gas Flowmeter/DP Transmitter	0-10 in of water column 0-30,209 acfm	Ductwork between WESP #2 and ID fan
Stack gas temperature (°F)	Maximum combustion gas flowrate	100 ohm platinum resistance temperature detector (RTD)	50-150 °F	Ductwork between WESP #2 and ID fan
Stack gas pressure (in. wc)	Maximum combustion gas flowrate	Rosemount Model 3051 pressure sensor	-55 to +5 inches of water column	Ductwork between WESP #2 and ID fan
Feedrate of waste to each burner (lb/hr)	Maximum hazardous waste feedrate; chlorine feedrate	Micromotion Model DL-100 Flowmeter	0-150 lbs/min	Feed piping just prior to inlet to each burner

In addition, analyzer outputs for O_2 and THC are sent to the DCS. The DCS displays and records gas concentrations on both an uncorrected and corrected basis. The DCS performs the correction of THC data to 7% oxygen on a dry basis. From the instantaneous data, the DCS computes the one-minute averages and hourly rolling averages. These averages are also archived by the plant information (PI) system. The DCS activates alarms and initiates an AWFCO if the permitted limits are exceeded.

During the Confirmatory Performance Test, data generated by the CEMS will be used to demonstrate compliance with MACT THC emission requirement.

4.2 Continuous Parameter Monitoring System (CPMS)

A network of instruments is used to continuously monitor and record the RKI operating parameter data that is needed to demonstrate compliance with the HWC MACT rule. A list of the applicable RKI operating parameters that are continuously monitored is presented in Table 4-2.

5.0 PERFORMANCE EVALUATION PROGRAM SUMMARY

The purpose of the CMS performance evaluation test is to verify that the CMS relating to dioxin/furan emission compliance is calibrated and collecting valid data during the Confirmatory Performance Test. To calibrate the system instruments, Eastman will follow procedures defined in performance specifications promulgated by EPA or manufacturer's recommendations for those devices that do not have promulgated performance specifications. The performance evaluation test of the CMS components will consist of instrument calibration verification and audit of CMS data reduction and recording functions. These will be completed prior to beginning the Confirmatory Performance Test.

5.1 Continuous Emission Monitoring System (CEMS) Calibrations

The on-going performance evaluations for the permanently-installed THC and O_2 CEMS are defined in Eastman's CEMS quality control program and follow the requirements in Performance Specification 4B for O_2 CEMS and 8A for THC CEMS, found in 40 CFR Part 60, Appendix B. The CEMS performance evaluation will consist of a calibration error test, response time test, and relative accuracy test. Additionally, the requirements of each of these evaluations are summarized in Table 4-1.

5.1.1 Calibration Error Test Procedure

Calibration error tests will be conducted on both O_2 and THC CEMS according to the procedures in Performance Specification 4B for O_2 and 8A for THC. The mean difference between the CEMS responses and reference values must be no more than 5 percent of span for THC CEMS (5 ppmv THC), and no more than 0.5 percent O_2 for O_2 CEMS.

5.1.2 Response Time Test Procedure

Response time tests will be conducted on both O_2 and THC CEMS according to the procedures in Performance Specification 4B for O_2 and 8A for THC. The system response time for each instrument must not exceed 2 minutes.

5.1.3 Relative Accuracy Test Procedure

This test only applies to the Oxygen CEMS. A Relative Accuracy test will be conducted according to the procedure in Performance Specification 4B. The RA of the CEMS must be no greater than 1.0 percent O_2. There is no RA test for THC CEMS.

All applicable CEMS calibrations will be completed prior to commencing the Confirmatory Performance Test.

5.2 Continuous Parameter Monitoring System (CPMS) Calibrations

As EPA has not promulgated any specific performance specifications for CPMS instruments, Eastman will use manufacturer's procedures and working knowledge of specific instruments to conduct the calibrations. A summary of the calibrations that will be performed on CPMS instruments prior to conducting the Confirmatory Performance Test is provided in Table 5-1.

Table 5-1

Applicable CPMS Calibrations

Tag Name	Measured Parameter(s)	Instrument	Calibration Prior to Performance Testing
TI-1135A, B & C	Combustion chamber exit temperature	Type K Metal Thermocouples	- Compare DCS reading to calibrated simulation device
TI-1328	Stack gas temperature	Resistance Temperature Detector	- Compare DCS reading to calibrated simulation device
FI-1352	Stack gas flowrate	McCrometer V-Cone® Gas Flowmeter	- Field comparison to pitot measurements
PI-1329	Stack gas pressure	Pressure Sensor	- Confirm zero - Calibrate transmitter by comparing readings to supplied input pressures
FI-1087, 1096, & 1105	Feedrates of wastes	MicroMotion Flowmeters	- Confirm zero - Perform flow test

5.3 AWFCO System Integration and Testing

The DCS includes an automatic waste feed cutoff (AWFCO) system that stops the hazardous waste feed when the control system records an operating condition outside the limits necessary to comply with permit conditions. The CPMS and CEMS described in this plan are integrated with the AWFCO system. Selected AWFCO parameters have an alarm and alarm message associated with them that audibly sounds and logs in the control room when the trip point for those AWFCO parameters are approached. The DCS compares the instantaneous or calculated rolling average values, depending on the parameter, to the corresponding parameter trip set point. Upon exceedance of an interlock set point, the DCS activates shutoff command to stop the hazardous waste feed. In addition, an AWFCO will trigger if the lower or upper range limits of any CPMS instrument is reached or exceeded. Additional AWFCO trips will occur if any CMS instrument or DCS software is turned off or sends invalid data input.

5.4 Instrument Location

Pursuant to §63.8(c)(2) of the MACT General Provisions, Eastman has installed all CMS so that they measure representative process parameters or process emissions.

5.5 Data Quality Objectives

Eastman fully expects that the calibration procedures and instrument audits prescribed in this test plan will yield precise, accurate, and complete CMS data. The applicable CMS will be calibrated using manufacturer's procedures or standard EPA performance specifications, as outlined in this test plan, prior to conducting the Confirmatory Performance Test.

6.0 TEST SCHEDULES

The CMS performance evaluation tests will be completed prior to the initiation of the Confirmatory Performance Test. The CEMS and CPMS performance evaluation tests will not necessarily be conducted at the same time. Pending agency approval of this plan, Eastman plans to conduct the RKI Confirmatory Performance Test in December 2020.

7.0 QUALITY ASSURANCE

Pursuant to §63.8(e)(3) of the MACT General Provisions, the CMS performance evaluation test plan must include an internal and external quality assurance (QA) program. The QA programs are described below:

7.1 Internal QA

The quality of data generated by the system will be assured by ongoing internal quality control procedures. The internal QA program will include the activities planned by routine operators and analysts to provide an assessment of CMS performance. The routine procedures include the following:

- Testing and other quality assurance checks of parameter CMS and CEMS following procedures summarized by this CMS Performance Evaluation Plan. In addition to this CMS Performance Evaluation Test Plan, the CMS Quality Control Program continues to apply pursuant to §63.8(d) of the MACT General Provisions.
- Field verification of the CMS instrument location, condition, and installation.
- Daily audit of the CEMS components and operating parameters. Corrective action will be taken as needed to remedy malfunctions or abnormal operating conditions.
- Daily calibration drift checks on the CEMS. The results of the calibration drift check will be reviewed daily and the monitoring instruments will be adjusted for drift as appropriate.

7.2 External QA

Eastman's external QA program shall include systems audits that include the opportunity for on-site evaluation of instrument calibration, data validation, and documentation of quality control data and field maintenance activities. The QA program implementation will verify conformance via:

- Reviews of calibration procedures in the CMS Performance Evaluation Plan
- Reviews of data sheets to ensure completeness and accuracy
- Examinations of facility records documenting the data verification and data reduction/calculation procedures performed for compliance purposes.

The Agency may perform similar verification of conformance to the QA Program by a similar review process.

In addition, the quality of data generated by the CMS will be assured by implementing the quality control procedures presented in the Continuous Monitoring System Performance Evaluation Plan. This program addresses all aspects of quality control for the incinerator process parameter monitors and the continuous emission monitors.

8.0 DOCUMENTATION

Results of the performance evaluations will be summarized on data sheets. All data sheets, calculations, and CMS system data records will be included in a CMS Performance Evaluation Test Report.