TN Department of General Services | Real Estate Asset Management (STREAM)

REQUEST FOR QUALIFICATIONS

Best Value Procurement Option One

For the Project Titled:

LED Lighting Replacement and Upgrades
Turney Center Industrial Complex, Only, TN
SBC Project No.: 140/001-04-2015-03

RFQ CONTENTS

SECTIONS:

1. INTRODUCTION
2. RFQ SCHEDULE OF EVENTS
3. RESPONSE REQUIREMENTS
4. GENERAL CONTRACTING INFORMATION & REQUIREMENTS
5. PROCUREMENT PROCESS & CONTRACT AWARD

ATTACHMENTS:

6.1. STATEMENT OF CERTIFICATIONS AND ASSURANCES
6.2. TECHNICAL RESPONSE & EVALUATION GUIDE
SECTION A – GENERAL BUSINESS REQUIREMENTS
SECTION B – GENERAL QUALIFICATIONS & EXPERIENCE
SECTION C – TECHNICAL QUALIFICATIONS, EXPERIENCE, & APPROACH
6.3. RESPONSE PACKAGE DOCUMENTS
A. RESPONSE PACKAGE COVER SHEET
B. PROJECT REFERENCE FORM
6.4. SCORE SUMMARY MATRIX FORMAT
6.5. OWNER'S PROJECT REQUIREMENTS AND DETENTION PROJECT PROCEDURES

Release Date: October 26, 2016

1. INTRODUCTION

1.1. State of Procurement Purpose

The State of Tennessee Real Estate Asset Management ("STREAM"), an agency of the State of Tennessee, hereinafter referred to as "the State," has issued this Request for Qualifications ("RFQ") to define the State's minimum service requirements, solicit responses, detail response requirements, and, outline the State's process for evaluating responses and selecting a Contractor using the Best Value Procurement Option One ("BV1").

Through this RFQ, the State seeks to contract for the requested services and to give ALL qualified businesses, including those that are owned by minorities, women, Tennessee service-disabled veterans, and small business enterprises, opportunity to do business with the State as contractors and subcontractors.

Tennessee statutes (T.C.A. 4-15-101, et. seq.) empower the State Building Commission ("SBC") to award, construction contracts for any improvement to real property in which the State of Tennessee has an interest. STREAM shall utilize the "competitive sealed best value procedure" as herein described, in order to achieve maximum competition among qualified Respondents and to obtain the highest level of quality at the best price for State projects "utilizing procedures that promote competition to the greatest extent possible".

A site visit will not be held as a part of the qualifications process. A formal site visit, if any, will be conducted as a part of the bidding process at a later date.

1.2. Project Description

The State is seeking to retain a company whose experience exceeds the minimum requirements to complete the replacement of the existing lighting fixture to LED fixtures at Turney Center Industrial Complex in Only, TN. The project will install new LED fixtures at each housing unit and support buildings. All light fixtures will require a UL label. Light replacement will include lights in each offender cell, high bay day rooms, balcony lights, and support spaces lighting. Other light fixtures are located in corridors, offices, dining areas, kitchen areas, and storage areas throughout the institution. Project will adhere to the Owner's Project Requirements and Detention Project Procedures (RFQ Attachment 6.5.) and will require access the secure perimeter through a security sallyport.

1.3. Current Project Status

The Designers for the Project were given the Notice-To-Proceed to begin Construction Documents ("CD") Phase on September 23, 2016.

The Designer (see contact information below) may be contacted for partial construction document information. These are preliminary drawings and it is expected changes will be made during the Construction Document ("CD") Phase.

Designer: Oliver Little Gipson Engineering Inc. – Tony Gipson – 931-454-9940

1.4. Project Location

The project(s) will be located in Turney Center Industrial Complex, 1449 R. W. Moore Memorial Route Highway, Only, TN 37140.

DRAFT

1.5. Project Expectations, and Objectives

The following are characteristics that Respondents should be able to demonstrate:

1. A proven track record of successfully completing light replacement projects within secure perimeters in state institutions –state prisons, federal prisons, county jails, city jails qualify as examples as secure facilities.
2. Significant experience in scheduling construction activities resulting accurate cadence of construction especially in offenders cells. Ability to schedule around specific activities within housing units and support buildings.
3. Experience with state construction contracts, contract general conditions and application for payments.
4. State of Tennessee Contractor License with the appropriate limits.

This Project is part of a statewide energy program and it requires accurate reporting of energy conservation and the projected return on investment calculations methods included in this RFQ. Contractor shall provide evidence of experience with energy conservation and post construction energy analysis.

1.6. Project Construction Budget

Preliminary Estimated Construction Cost for this Project - $ 1,985,500.00

1.7. Nondiscrimination

No person shall be excluded from participation in, be denied benefits of, or be otherwise subjected to discrimination in the performance of a contract pursuant to this solicitation or in the employment practices of the Vendor on the grounds of handicap or disability, age, race, color, religion (subject to *Tennessee Code Annotated,* Sections 4-21-401 and 405), sex, national origin, or any other classification protected by federal, Tennessee state constitutional, or statutory law. The Vendor pursuant to this solicitation shall post in conspicuous places, available to all employees and applicants, notices of nondiscrimination.

1.8. RFQ Communications

1.8.1. The State has assigned the following RFQ identification number that shall be referenced in all communications regarding this RFQ:

SBC PROJECT No.: 140/001-04-2015-03

1.8.2. **Unauthorized contact about this RFQ with employees or officials of the State of Tennessee, except as detailed below, may result in disqualification from consideration under this procurement process.**

1.8.2.1. Any entity or individual responding or intending to respond to this RFQ ("Respondent") shall direct communications concerning this RFQ to the following person designated as the Solicitation Coordinator:

Nickie Smith, Solicitation Coordinator
Department of General Services
Central Procurement Office, 3rd Floor
William R. Snodgrass Tennessee Tower
312 Rosa L. Parks Avenue

Nashville, TN 37243
Phone: (615) 532-7475
Email: Nickie.smith@tn.gov

1.8.2.2. Notwithstanding the foregoing, prospective Respondents may alternatively contact:

a. staff of the Governor's Office of Diversity Business Enterprise for assistance available to minority-owned, woman-owned, Tennessee service-disabled veteran owned, and small businesses as well as general, public information relating to this RFQ (visitwww.tn.gov/businessopp/ for contact information); and:

b. The DGS Safety and Compliance Manger, Pamela Fitzpatrick, who is the individual designated by the State to coordinate compliance with the nondiscrimination requirements of the State of Tennessee, Title VI of the Civil Rights Act of 1964, the Americans with Disabilities Act of 1990, and associated federal regulations.

1.8.3. Only the State's official, written responses and communications with Respondents are binding with regard to this RFQ. Oral communications between a State official and one or more Respondents are unofficial and non-binding.

1.8.4. Potential Respondents shall ensure that the State receives all written questions and comments, including questions and requests for clarification, no later than the Written Questions & Comments Deadline detailed in the RFQ Section 2, Schedule of Events.

1.8.5. Respondents shall assume the risk of the method of dispatching any communication or response to the State. The State assumes no responsibility for delays or delivery failures resulting from the Respondent's method of dispatch. Actual or digital "postmarking" of a communication or response to the State by a specified deadline is not a substitute for the State's actual receipt of a communication or response.

1.8.6. The State will convey all official responses and communications related to this RFQ to the prospective Respondents from whom the State has received a Notice of Intent to Respond (refer to RFQ Section 1.12).

1.8.7. The State reserves the right to determine, at its sole discretion, the method of conveying official, written responses and communications related to this RFQ. Such written communications may be transmitted by mail, hand-delivery, facsimile, electronic mail, Internet posting, or any other means deemed reasonable by the State. For internet posting, please refer to the following website: http://www.tn.gov/generalservices/article/request-for-qualification-rfqs.

1.8.8. The State reserves the right to determine, at its sole discretion, the appropriateness and adequacy of responses to written comments, questions, and requests related to this RFQ. The State's official, written responses will constitute an amendment of this RFQ.

1.8.9. Any data or factual information provided by the State (in this RFQ, an RFQ amendment, or any other communication relating to this RFQ) is for informational purposes only. The State

DRAFT

will make reasonable efforts to ensure the accuracy of such data or information; however, it is the Respondent's obligation to independently verify any data or information provided by the State. The State expressly disclaims the accuracy or adequacy of any information or data that it provides to prospective Respondents.

1.9. Assistance to Respondents with a Handicap or Disability

Prospective Respondents with a handicap or disability may receive accommodation relating to the communication of this RFQ and participating in the RFQ process. Prospective Respondents may contact the Solicitation Coordinator to request such reasonable accommodation no later than the Disability Accommodation Request Deadline detailed in the RFQ Section 2, Schedule of Events.

1.10. Respondent Required Review & Waiver of Objections

1.10.1. Each prospective Respondent shall carefully review this RFQ, including but not limited to, attachments, amendments, questions, comments, defects, objections, or any other matter requiring clarification or correction (collectively called "Questions and Comments")

1.10.2. Any prospective Respondent having Questions and Comments concerning this RFQ shall provide them in writing to the State no later than the written Questions & Comments Deadline detailed in the RFQ Section 2, Schedule of Events.

1.10.3. Protests based on any objection to the RFQ shall be considered waived and invalid if the objection has not been brought to the attention of the State, in writing, by the Written Questions & Comments Deadline.

1.11. Pre-Response Conference

A Pre-Response Conference will be held at the time and date detailed in the RFQ Section 2, Schedule of Events. Pre-Submittal Conference attendance is strongly encouraged and potential Respondents may be limited to a maximum number of attendees depending upon overall attendance and space limitations.

The conference will be held at:

William R. Snodgrass Tennessee Tower
3rd Floor, Conference Room A
312 Rosa L. Parks Avenue
Nashville, TN 37243

The purpose of the conference is to discuss the RFQ scope of services. The State will entertain questions, however potential Respondents shall understand that the State's response to any question at the Pre-Submittal Conference shall be tentative and non-binding. Potential Respondents should submit questions concerning the RFQ in writing and shall submit them prior to the Written Comments Deadline date detailed in the RFQ Section 2, Schedule of Events. The State will send the official response to questions to potential Respondents as indicated in Section 1.12 and on the date detailed in the RFQ Section 2, Schedule of Events

Attendees should allow sufficient time to locate vehicle parking. Each visitor shall present proper photo identification, such as a valid driver's license.

DRAFT

1.12. Notice of Intent to Respond

Before the Notice of Intent to Respond Deadline detailed in RFQ Section 2, Schedule of Events, potential Respondents should submit to the Solicitation Coordinator a Notice of Intent to Respond in the form of a simple e-mail or other written communication. Such notice should include the following information:

- the business or individual's name (as appropriate);
- a contact person's name and title; and,
- the contact person's mailing address, telephone number, facsimile number, and e-mail address.

A Notice of Intent to Respond creates no obligation and is not a prerequisite for making a proposal; however, it is necessary to ensure receipt of any RFQ amendments or other notices and communications relating to this RFQ.

1.13. Response Deadline

A Respondent shall ensure that the State receives a response no later than the Response Deadline time and date detailed in the RFQ Section 2, Schedule of Events. A response shall respond, as required, to this RFQ (including its attachments) as may be amended. The State will not accept late responses, and a Respondent's failure to submit a response before the Response Deadline will result in disqualification of the response. It is the responsibility of the Respondent to ascertain any additional security requirements with respect to packaging and delivery to the State of Tennessee. Respondents should be mindful of any potential delays due to security screening procedures, weather, or other filing delays whether foreseeable or unforeseeable.

DRAFT

2. RFQ SCHEDULE OF EVENTS

2.1. The following RFQ Schedule of Events represents the State's best estimate for this RFQ.

EVENT	TIME (central time zone)	DATE (all dates are State business days)
1. RFQ Issued		October 26, 2016
2. Disability Accommodation Request Deadline		October 28, 2016
3. Pre-Response Conference	1:00 p.m.	November 1, 2016
4. Notice of Intent to Respond Deadline		November 2, 2016
5. Written "Questions & Comments" Deadline	2:00 p.m.	November 7, 2016
6. State Response to Written "Questions & Comments"		November 10, 2016
7. Response Deadline	2:00 p.m.	November 29, 2016
8. State Completion of Technical Submittal Evaluations		December 6, 2016
9. State Issues Evaluation Notice		December 6, 2016.
10. End of 7-Day Wait Period for Consideration of Protest.		December 13, 2016
11. Anticipated Bid Date		February 23, 2016
12. Anticipated Contract Start		April 28, 2017

2.2. **The State reserves the right, at its sole discretion, to adjust the RFQ Schedule of Events as it deems necessary.** Any adjustment of the Schedule of Events shall constitute an RFQ amendment, and the State will communicate such to potential Respondents from whom the State has received a Notice of Intent to Respond (refer to RFQ Section 1.12).

DRAFT

3. RESPONSE REQUIREMENTS

3.1. Response Contents: A response to this RFQ should address the following:

3.1.1. **Phase I**

Mandatory Requirements: RFQ Attachment 6.2, Section A, details the mandatory technical, functional, and experience requirements that shall be demonstrated in the response to this RFQ in order to be moved on to Phase II of the Technical Response evaluation. A Respondent shall duplicate and use RFQ Attachment 6.2, Section A as a guide to organize responses for the Mandatory Requirements of the RFQ response. The Respondent should insert the page location of their response in the indicated first column of the RFQ Attachment 6.2, Section A. RFQ Attachment 6.2, Section A, is the State's sole means to evaluate as to whether or not a Respondent meets mandatory qualifications (Phase I).

3.1.2. **Phase II**

General Qualifications & Experience: RFQ Attachment 6.2 Section B is included in the State's evaluation of Phase II of the Technical Response Evaluation, and it details general information and qualifications that shall be demonstrated in the response to this RFQ. A Respondent shall duplicate and use RFQ Attachment B as a guide to organize responses for this portion of the RFQ response. The Respondent should insert the page location of their response in the indicated first column of the RFQ Attachment 6.2, Section B. The response should be economically prepared, with emphasis on completeness and clarity. A response, as well as any reference material presented, shall be written in English and shall be written on standard 8 ½" x 11" pages (although oversize exhibits are permissible). All response pages shall be numbered. All information shall be incorporated into a response to a specific requirement and clearly referenced. Any information not meeting these criteria will be deemed extraneous and will not contribute to evaluations.

Technical Qualifications, Experience & Approach: RFQ Attachment 6.2, Section C is also included in the State's evaluation of Phase II of the Technical Response Evaluation and it details technical qualifications, experience, and approach items that shall be demonstrated in the response to this RFQ. A Respondent shall duplicate and use RFQ Attachment 6.2, Section C as a guide to organize responses for this portion of the RFQ response. The Respondent should reference the page location of their response in the indicated first column of the RFQ Attachment 6.2, Section C. A response, as well as any reference material presented, shall be written in English and shall be written on standard 8 ½" x 11" pages (although oversize exhibits are permissible). All response pages shall be numbered. Any information not meeting these criteria will be deemed extraneous and will not contribute to evaluations.

3.2. Non-Responsive:

The State may determine a response to be non-responsive and reject it if

a. The Respondent fails to organize and properly reference the Proposal as required by the RFQ and RFQ Attachment 6.2, or

b. The Respondent document does not appropriately respond to, address, or meet all of the requirements and proposal items detailed in RFQ Attachment 6.2

3.3. Response Delivery

DRAFT

A Respondent shall ensure that the State receives a Response to this RFQ no later than the Response Deadline time and dates detailed in the RFQ Section 2, Schedule of Events. All responses shall be delivered to:

Nickie Smith, RFQ Coordinator
Department of General Services
William R. Snodgrass Tennessee Tower, 3rd Floor (Central Procurement Office)
312 Rosa L. Parks Avenue
Nashville, Tennessee 37243
Telephone: (615) 532-7475

3.4. Response Format

3.4.1. A Respondent shall ensure that the original response meets all form and content requirements detailed within this RFQ.

3.4.2. A Respondent shall submit original response documents and copies as specified below.

3.4.2.1. One original Response paper document labeled:

"RFQ SBC 140/001-04-2015-03 RESPONSE ORIGINAL"

AND

Six copy(s) of the Response in the form of one digital document in "PDF" format properly recorded on its own otherwise blank, standard CD-R recordable disc labeled:

"RFQ SBC 140/001-04-2015-03 DIGITAL RESPONSE COPY"

Any discrepancies between the paper response document and digital copies may result in the State rejecting the response as nonresponsive. The original, signed paper document will take precedence.

3.4.3. A Respondent shall separate, seal, package, and label the documents and discs for delivery as follows.

3.4.3.1. The Response original document and copy disc(s) shall be placed in a sealed package that is clearly labeled:

"DO NOT OPEN… RFQ SBC 140/001-04-2015-03 TECHNICAL RESPONSE FROM [INSERT RESPONDENT LEGAL ENTITY NAME]'"

3.4.3.2. The Response Package Cover Attachment (RFQ Attachment 6.3.a.) must be completely filled in with all pertinent information and affixed to the outermost container of the Technical Response.

3.5. Response & Respondent Prohibitions: A response to this RFQ should not:

DRAFT

3.5.1. A Respondent shall not include the Respondent's own contract terms and conditions. If a response contains such terms and conditions, the State, at its sole discretion, may determine the proposal to be a non-responsive counter offer and reject it.

3.5.2. A Respondent shall not restrict the rights of the State or otherwise qualify offer to deliver services as required by this RFQ. The State, at its sole discretion, may determine the proposal to be a non-responsive counteroffer and reject it.

3.5.3. A Respondent shall not propose alternate services (*i.e.*, offer services different from those requested and required by this RFQ). The State may consider a proposal of alternate services to be non-responsive and reject it

3.5.4. A Respondent shall not provide, for consideration in this RFQ process or subsequent contract negotiations, incorrect information that the Respondent knew or should have known was materially incorrect. If the State determines that a Respondent has provided such incorrect information, the State may deem the Respondent's proposal non-responsive and reject it.

3.5.5. A Respondent shall not submit more than one Proposal in response to this RFQ. If a Respondent submits more than one Proposal, the State may deem all of the proposals non-responsive and reject them.

3.5.6. A Respondent shall not submit a Proposal as a prime contractor while also permitting one or more other Respondents to offer the Respondent as a subcontractor in their own Proposals. Such may result in the disqualification of all Respondents knowingly involved. This restriction does not, however, prohibit different Respondents from offering the same subcontractor as a part of their proposals (provided that the subcontractor does not also submit a proposal as a prime contractor).

3.5.7. A Respondent shall not be (and the State will not award a contract to):

a. an individual who is, or within the past six months has been, an employee of the State of Tennessee or who is a volunteer member of a State board or commission that votes for, lets out, overlooks, or any manner superintends the services being procured in this RFQ;

b. a company, corporation, or any other contracting entity in which an ownership of two percent (2%) or more is held by an individual who is, or within the past six months has been, an employee of the State of Tennessee (this will not apply either to financial interests that have been placed into a "blind trust" arrangement pursuant to which the employee does not have knowledge of the retention or disposition of such interests or to the ownership of publicly traded stocks or bonds where such ownership constitutes less than 2% of the total outstanding amount of the stocks or bonds of the issuing entity);

c. a company, corporation, or any other contracting entity which employs an individual who is, or within the past six months has been, an employee of the State of Tennessee in a position that would allow the direct or indirect use or disclosure of information, which was obtained through or in connection with his or her

employment and not made available to the general public, for the purpose of furthering the private interest or personal profit of any person; or,

d. any individual, company, or other entity involved in assisting the State in the development, formulation, or drafting of this RFQ or its scope of services (such person or entity being deemed by the State as having information that would afford an unfair advantage over other Respondents).

For the purposes of applying the requirements of this RFQ subsection 3.5.7., the State will deem an individual to be an employee of the State of Tennessee until such time as all compensation for salary, termination pay, and annual leave has been paid, but the term "employee of the State of Tennessee" shall not include individuals performing volunteer services for the State of Tennessee.

3.6. Conflict of Interest

3.6.1. This RFQ is also subject to *Tennessee Code Annotated*, Section 12-4-101

3.6.2. This RFQ is also subject to State Building Commission Policy and Procedure 12.02, and the duties and obligations of the State are subject to Policy 12.02.

3.7. Response Errors & Revisions

A Respondent is responsible for any and all errors or omissions in its response to this RFQ. A Respondent will not be allowed to alter or revise its response after the Response Deadline time and date as detailed in RFQ Section 2, Schedule of Events, unless such is formally requested in writing by the State (e.g., through a request for clarification, etc.).

3.8. Response Withdrawal

A Respondent may withdraw a response at any time before the Response Deadline time and date as detailed in RFQ Section 2, Schedule of Events, by submitting a written signed request by an authorized representative of the Respondent. After withdrawing a response, a Respondent may submit another Response at any time before the Response Deadline time and date as detailed in RFQ Section 2, Schedule of Events.

3.9. Response Preparation Costs

The State will not pay any costs associated with the preparation, submittal, or presentation of any response. Each Respondent is solely responsible for the costs it incurs in responding to this RFQ.

DRAFT

4. GENERAL CONTRACTING INFORMATION & REQUIREMENTS

4.1. RFQ Amendment

The State reserves the right to amend this RFQ at any time, provided that it is amended in writing. However, prior to any such amendment, the State will consider whether it would negatively impact the ability of potential Respondents to meet the deadlines and revise the RFQ Schedule of Events if deemed appropriate. If a RFQ amendment is issued, the State will convey it to potential Respondents who submitted a Notice of Intent to Respond (refer to RFQ Section 1.12). A response shall respond, as required, to the final RFQ (including its attachments) as may be amended.

4.2. RFQ Cancellation

The State reserves the right, at its sole discretion, to cancel the RFQ or to cancel and reissue this RFQ in accordance with applicable laws and regulations.

4.3. State Right of Rejection

4.3.1. Subject to applicable laws and regulations, the State reserves the right to reject, at its sole discretion, any and all responses.

4.3.2. The State may deem as non-responsive and reject any response that does not comply with all terms, conditions, and performance requirements of this RFQ. Notwithstanding the foregoing, the State reserves the right to waive, at its sole discretion, minor variances from full compliance with this RFQ. If the State waives variances in a response, such waiver shall not modify the RFQ requirements or excuse the Respondent from full compliance, and the State may hold any Contractor to strict compliance with this RFQ.

4.4. Assignment & Subcontracting

The Contractor may not subcontract, transfer, or assign any portion of the Contract awarded as a result of this RFQ without prior approval of the State. The State reserves the right to refuse approval, at its sole discretion, of any subcontract, transfer, or assignment.

4.5. Insurance

The State will require the apparent successful Respondent to provide proof of insurance coverage as required by the State's Designers' Manual (Conditions of the Contract), before entering into a contract. Failure to provide evidence of such insurance coverage is a material breach and grounds for termination of the contract negotiations. Any insurance required by the State shall be in form and substance acceptable to the State.

4.6. Professional Licensure and Department of Revenue Registration

4.6.1. Respondents shall be familiar with the Contractors Licensing Act of 1994, as currently amended (codified in Tennessee Code Annotated Sections 62-6-101, et seq). A contract will not be awarded to a Respondent whose proposal is in conflict with the State of Tennessee licensing law.

4.6.2. A Respondent shall be a licensed Contractor in the State of Tennessee. Appropriate Tennessee Contractor License(s) are required, and demonstration of current licensure in the State of Tennessee is a mandatory part of the proposal submission. The Contractor

DRAFT

shall maintain licensure during the period of this Contract, and shall notify the State of any changes in licensure.

4.6.3. Before the response to this RFQ is submitted, the apparent successful Respondent (and Respondent employees and subcontractors, as applicable), shall hold all necessary, appropriate business and professional licenses to provide service as required. The State may require any Respondent to submit evidence of proper licensure.

4.6.4. Respondent shall complete the Response Package Cover Sheet, RFQ Attachment 6.3.a., which is to be affixed to the outermost container of the response package. The dollar limit on the license shall be sufficient to support the preliminary estimated construction cost for this Project (Refer to RFQ Section 1.6).

4.6.5. Before the Contract resulting from this RFQ is signed, the apparent successful Respondent shall be registered with the Tennessee Department of Revenue for the collection of Tennessee sales and use tax. The State shall not award a contract unless the Respondent provides proof of such registration or provides documentation from the Department of Revenue that the Contractor is exempt from this registration requirement. The foregoing is a mandatory requirement of an award of a contract pursuant to this solicitation. For purposes of this registration requirement, the Department of Revenue may be contacted at: TN.Revenue@tn.gov.

4.7. Disclosure of Response Contents

4.7.1. All materials submitted to the State in response to this RFQ shall become the property of the State of Tennessee. Selection or rejection of a response does not affect this right. By submitting a response, a Respondent acknowledges and accepts that the full response contents and associated documents will become open to public inspection in accordance with the laws of the State of Tennessee.

4.7.2. The State will hold all responses in confidence during the evaluation process. Notwithstanding the foregoing, a list of actual Respondents submitting timely responses may be available to the public, upon request, after the responses are opened.

4.7.3. Upon completion of response evaluations, indicated by public release of Evaluation Notice, the responses and associated materials will be open for review by the public in accordance with *Tennessee Code Annotated*, Section 10-7-504(a)(7).

4.8. Contract Approval and Contract Payments

4.8.1. The State shall not be liable for payment of any type associated with the Contract and shall not be responsible for any work done by the Contractor, even work done in good faith and even if the Contractor is orally directed to proceed with the delivery of services, if it occurs before the Contract start date or after the Contract end date.

4.8.2. All payments relating to this procurement will be made in accordance with the Payment Terms and Conditions of the Contract.

DRAFT

4.8.3. If any provision of the Contract provides direct funding or reimbursement for the competitive purchase of services or items to be delivered to the State as a component of contract performance or otherwise provides for the reimbursement of specified, actual costs, the State will employ all reasonable means and will require all such documentation that it deems necessary to ensure that such purchases were competitive and costs were reasonable, necessary, and actual. The Contractor shall provide reasonable assistance and access related to such review. Further, the State shall not remit, as funding or reimbursement pursuant to such Contract provisions, any amount(s) which it determines did not result from a reasonably competitive purchase or do not represent reasonable, necessary, and actual costs.

4.9. Severability

If any provision of this RFQ is declared by a court to be illegal or in conflict with any law, said decision will not affect the validity of the remaining RFQ terms and provisions, and the rights and obligations of the State and Respondents will be construed and enforced as if the RFQ did not contain the particular provision held to be invalid.

4.10. Joint Ventures

Firms submitting Qualification Statements as a Joint Venture shall file a statement of partnership authority with the Tennessee Secretary of State's office containing the information required by Tenn. Code Ann. Section 61-1-303(a)(1) as well as have similar projects completed as the Joint Venture.

If a Respondent intends to submit a Proposal as a joint venture, then the following requirements shall apply:

a. For the purposes of this RFQ, the State recognizes a joint venture as separate organizations or business entities that intend to combine professional or technical expertise and business experience, and to share contractual and project responsibilities in performance of a contract pursuant to this RFQ;

b. The joint venture shall be registered to do business in the State of Tennessee or each joint venture participant shall be registered to do business in Tennessee

c. The joint venture shall meet the licensure requirements stated in Section 4.6 of this RFQ or each joint venture participant shall meet the licensure requirements state in section 4.6 of this RFQ

d. The joint venture shall have a monetary limitation on the license sufficient to support the preliminary estimated construction cost for this project or one of the joint venture participants shall have a monetary limitation sufficient to support the preliminary estimated construction cost for this project. Joint venture participants' monetary limits may not be combined to support the preliminary estimated construction cost for the project.

e. The joint venture shall meet the insurance requirements state in the RFQ or each joint venture participant shall meet the insurance requirements stated in this RFQ. A certificate of insurance must be submitted to provide proof of compliance with the insurance requirements.

f. Each joint venture participant shall individually provide all documentation required for a review of financial responsibility and stability. A sub-contractor to a Respondent is not a joint venture participant.

DRAFT

5. PROCUREMENT PROCESS & CONTRACT AWARD

5.1. Evaluation Categories & Maximum Points

5.1.1. The evaluation process is designed to determine those responses having the highest total scores. The RFQ Coordinator will use RFQ Attachment 6.2., Qualifications & Evaluation Guide, to manage the evaluation and maintain evaluation records.

The RFQ Coordinator will review each response to determine compliance with RFQ requirements (refer to RFQ Attachment 6.2.). If the RFQ Coordinator determines that the response may have failed to meet one or more of the RFQ requirements, the Evaluation Team (made up of three or more State of Tennessee employees) will review the responses and record its determination of whether: 1) the Response meets mandatory requirements; 2) the State will request clarifications or corrections; or, 3) the State will determine the Response as non-responsive to the RFQ and reject it.

The State will consider qualifications, experience and approach, in the evaluation of proposal. The maximum points that may be awarded for each of these categories are detailed below.

Each category is weighted as follows and one hundred points is the maximum total number of points which may be awarded:

EVALUATION CATEGORY	MAXIMUM POINTS POSSIBLE
General Business Requirements Refer to RFQ Attachment 6.2., Section A	**Pass/Fail**
Qualifications & Experience Refer to RFQ Attachment 6.2., Section B	**60**
Project Approach Refer to RFQ Attachment 6.2., Sections C	**40**

5.1.2. This competitive BV1 selection process is separated into two parts: a response (containing Qualifications, Experience, and Project Approach), and a bid.

Part One: Response must attain a combined normalized minimum score of seventy-five points for a Contractor to be offered opportunity to bid.

Part Two: Bids will only be considered for those Contractors invited to submit bids.

5.1.3. Contractors invited to submit bids may be limited to the three (3) highest scoring responses in Part One, who's Qualifications have attained the normalized minimum combined score of seventy-five points.

5.1.4. Contractors shall address the bidding requirements provided in the project documents, and the State of Tennessee's bidding procedures.

DRAFT

5.1.5. The Contractor submitting the lowest bid during Part Two will be considered the apparently low bidder for contract award, pending review by the State.

5.1.6. The State reserves the right, at its sole discretion, to request clarification of response documents or to conduct clarification discussions with any or all Contractors responding to the RFQ. Any such clarification or discussion may be limited to specific sections of the responses identified by the State. The subject Contractor shall submit any resulting clarification in writing as may be required by the State.

5.1.7. The State reserves the right to receive an oral presentation from, or conduct interviews with, Contractors responding to the RFQ. Oral presentations and the number of firms interviewed are at the sole discretion of the State. Presentations or interviews will be scheduled by the State and included as a component of response documents.

5.1.8. The evaluation of responses concludes with determination of the responses having the highest total scores.

5.1.9. The State will issue an Evaluation Notice to identify the apparently high scoring responses on the date detailed in the RFQ Schedule of Events. The Evaluation Notice shall not create rights, interests, or claims of entitlements with any RFQ participant.

5.1.10. RFQ files will be available for public inspection as detailed in the RFQ Schedule of Events. The files remain open for public review from that date. Bid result information will be available upon opening of bids (Bid Date), as detailed in the RFQ Schedule of Events.

5.2. Protest Process

Any protests or appeals of protests pursuant to this RFQ or the Evaluation Notice shall be handled in accordance with the SBC By-laws, Policy and Procedure Item 18.

DRAFT

SBC Project No. 140/001-04-2015-03

STATEMENT OF CERTIFICATIONS AND ASSURANCES

The Respondent shall sign and complete the Proposal Statement of Certifications and Assurances below as required, and it shall be included in the Technical Proposal (as required by RFP Attachment 6.2., Technical Proposal & Evaluation Guide, Section A, Item A.2.).

The Proposer does, hereby, expressly affirm, declare, confirm, certify, and assure ALL of the following:

1. The Respondent will comply with all of the provisions and requirements of the RFQ.
2. The Respondent will provide all specified goods or services as required by the contract awarded pursuant to this RFQ.
3. The Respondent accepts and agrees to all terms and conditions set out in the contract awarded pursuant to this RFQ.
4. The Respondent acknowledges and agrees that a contract resulting from the RFQ shall incorporate, by reference, all Response responses as a part of the contract.
5. The Respondent will comply, as applicable, with:
   (a) the laws of the State of Tennessee;
   (b) the policies and procedures of the State Building Commission and the Office of the State Architect;
   (c) Title VI of the federal Civil Rights Act of 1964;
   (d) Title IX of the federal Education Amendments Act of 1972;
   (e) the Equal Employment Opportunity Act and the regulations issued there under by the federal government; and,
   (f) the Americans with Disabilities Act of 1990 and the regulations issued there under by the federal government.
6. To the best of the undersigned's knowledge, information or belief, the information detailed within the Response to the RFQ is accurate.
7. The Response submitted to the RFQ was independently prepared, without collusion, and under penalty of perjury.
8. No amount shall be paid directly or indirectly to an employee or official of the State of Tennessee as wages, compensation, or gifts in exchange for acting as an officer, agent, employee, subcontractor, or consultant to the Respondent in connection with the request or any potential resulting contract.
9. The Response submitted in response to the RFQ shall remain valid for at least 120 days subsequent to the date of the Response opening and thereafter in accordance with any contract pursuant to the RFQ.
10. The Respondent affirms the following statement, as required by the Iran Divestment Act Tenn. Code Ann. § 12-12-111 "By submission of this response, each Respondent and each person signing on behalf of any Respondent certifies, and in the case of a joint response each party thereto certifies as to its own organization, under penalty of perjury, that to the best of its knowledge and belief that each Respondent is not on the list created pursuant to § 12-12-106."

By signature below, the signatory certifies legal authority to bind the responding entity to the provisions of this RFQ and any contract awarded pursuant to it. The State may, at its sole discretion and at any time, require evidence documenting the signatory's authority to be personally bound or to legally bind the responding entity.

DO NOT SIGN THIS DOCUMENT IF YOU ARE NOT LEGALLY AUTHORIZED TO DO SO BY THE ENTITY RESPONDING TO THIS RFQ.

SIGNATURE & DATE: _____

PRINTED NAME & TITLE: _____

RESPONDENT LEGAL ENTITY NAME: _____

RESPONDENT FEDERAL EMPLOYER IDENTIFICATION NUMBER (or SSN): _____

QUALIFICATIONS & EVALUATION GUIDE

SECTION A: GENERAL BUSINESS REQUIREMENTS. The Respondent shall address all items detailed below and provide, in sequence, the information and documentation as required (referenced with the associated item references). The Respondent shall also detail the proposal page number for each item in the appropriate space below.

The RFQ Coordinator will review the proposal to determine if the General Business Requirement Items are addressed as required and mark each with Yes (Y) or No (N). For each item that is not addressed as required, the Proposal Evaluation Team shall review the proposal and attach a written determination. In addition to the General Business Requirement Items, the RFQ Coordinator will review each proposal for compliance with all RFQ requirements.

RESPONDENT LEGAL ENTITY NAME:			
Proposal Page # (Respondent completes)	**Item Ref.**	**Section A— General Business Requirements**	**State Use Only** **Responsive Y/N**
		The response must be delivered to the State no later than the Technical Response Deadline specified in the RFQ Section 2, Schedule of Events.	
		The response shall not contain cost or pricing information of any type.	
		The response shall not contain any restrictions of the rights of the State or other qualification of the response.	
		A Respondent shall not submit alternate responses.	
		A Respondent shall not submit multiple responses in different forms (e.g. as a prime and a subcontractor).	
		Responsive to document layout details. Section and subsections partitioned with tabbed separation sheets. Tabs are labeled accordingly.	
	A.1.	Qualifications Submittal delivered as: One **<u>and</u>** Six digital document in PDF format properly recorded on its own otherwise blank, standard CD-R recordable disc.	
	A.2.	**<u>Statement of Certifications and Assurances:</u>** Provide the Statement of Certifications and Assurances (RFQ Attachment 6.1.), completed and signed by an individual empowered to bind the Respondent to the provisions of this RFQ and any resulting Contract. The document shall be signed without exception or qualification.	

RESPONDENT LEGAL ENTITY NAME:			
Proposal Page # (Respondent completes)	**Item Ref.**	**Section A— General Business Requirements**	**State Use Only** **Responsive Y/N**
	A.3.	**<u>Response Package Cover Sheet:</u>** The outermost container displays Contractor Licensing information, with the Respondent's State of Tennessee Contractor's License Number, Classification, Expiration Date, and License Limit (Refer to RFQ Attachment 6.3.a.). The dollar limit on the license is sufficient to support the preliminary estimated construction cost for this Project.	
	A.4.	**<u>Conflict of Interest:</u>** Provide a statement, based upon reasonable inquiry, of whether the Respondent or any individual who will perform work under the contract has a possible conflict of interest (*e.g.*, employment by the State of Tennessee), and, if so, the nature of that conflict. NOTE: Any questions of conflict of interest shall be solely within the discretion of the State, and the State reserves the right to cancel any award.	
	A.5.	Detail the name, e-mail address, mailing address, telephone number, and facsimile number of the person the State should contact regarding the response.	
	A.6.	Describe the Respondent's form of business (*i.e.*, individual, sole proprietor, corporation, non-profit corporation, partnership, limited liability company), and business location (physical location or domicile).	
	A.7.	Detail the number of years the Respondent has been in business.	
	A.8.	Provide a statement of whether there have been any mergers, acquisitions, or sales of the Company within the last five years, and if so, an explanation providing relevant details.	
	A.9.	Provide a statement of whether the Respondent or, to the Respondent's knowledge, any of the Respondent's employees, agents, independent contractors, or subcontractors, proposed to provide work on a contract pursuant to this RFQ, have been convicted of, pled guilty to, or pled *nolo contendere* to any felony. If so, include an explanation providing relevant details.	
	A.10.	Provide a statement of whether, in the last ten years, the Contractor has filed (or had filed against it), any bankruptcy or	

RESPONDENT LEGAL ENTITY NAME:			
Proposal Page # (Respondent completes)	**Item Ref.**	**Section A— General Business Requirements**	**State Use Only** **Responsive Y/N**
		insolvency proceeding, whether voluntary or involuntary, or undergone the appointment of a receiver, trustee, or assignee for the benefit of creditors, and if so, an explanation providing relevant details.	
	A.11.	Provide a statement of whether there is any material, pending litigation against the Respondent that the Respondent should reasonably believe could adversely affect its ability to meet contract requirements pursuant to this RFQ or is likely to have a material adverse effect on the Respondent's financial condition. If such exists, list each separately, explain the relevant details, and attach the opinion of counsel addressing whether and to what extent it would impair the Respondent's performance in a contract pursuant to this RFQ. NOTE: All persons, agencies, firms, or other entities that provide legal opinions regarding the Respondent shall be properly licensed to render such opinions. The State may require the Respondent to submit proof of such licensure detailing the state of licensure and licensure number for each person or entity that renders such opinions.	
	A.12.	**Securities Exchange Commission:** Provide a statement of whether there is any pending or in progress Securities Exchange Commission investigations involving the Respondent. If such exists, list each separately, explain the relevant details, and attach the opinion of counsel addressing whether and to what extent it will impair the Respondent's performance in a contract pursuant to this RFQ. NOTE: All persons, agencies, firms, or other entities that provide legal opinions regarding the Respondent shall be properly licensed to render such opinions. The State may require the Respondent to submit proof of such licensure detailing the state of licensure and licensure number for each person or entity that renders such opinions.	
	A.13.	Provide a statement and any relevant details addressing whether the Respondent is any of the following: (a) is presently debarred, suspended, proposed for debarment, or voluntarily excluded from covered transactions by any federal or state department or agency;	

RESPONDENT LEGAL ENTITY NAME:			
Proposal Page # (Respondent completes)	**Item Ref.**	**Section A— General Business Requirements**	**State Use Only** **Responsive Y/N**
		(b) has within the past three years, been convicted of, or had a civil judgment rendered against the contracting party from commission of fraud, or a criminal offense in connection with obtaining, attempting to obtain, or performing a public (federal, state, or local) transaction or grant under a public transaction; violation of federal or state antitrust statutes or commission of embezzlement, theft, forgery, bribery, falsification or destruction of records, making false statements, or receiving stolen property; (c) is presently indicted or otherwise criminally or civilly charged by a government entity (federal, state, or local) with commission of any of the offenses detailed above; and; (d) has within a three year period preceding the contract had one or more public transactions (federal, state, or local), terminated for cause or default.	
State Use – RFQ Coordinator Signature, Printed Name & Date:			

End of Section A

QUALIFICATIONS & EVALUATION GUIDE

SECTION B: GENERAL QUALIFICATIONS & EXPERIENCE. The Respondent shall address all items detailed below and provide, in sequence, the information and documentation as required (referenced with the associated item references). The Respondent shall also detail the proposal page number for each item in the appropriate space below. Proposal Evaluation Team members will evaluate and assign one score for all responses to Section B— General Qualifications & Experience Items.

RESPONDENT LEGAL ENTITY NAME:		
Proposal Page # (Respondent completes)	**Item Ref.**	**Section B— General Qualifications & Experience Items**
	B.1.	Provide a brief statement indicating your firm's credentials to deliver the services required by this RFQ. Include your firm's license information, number of employees, type of client base, and location of offices. Name the location of the office that will be providing the required services sought by the RFQ.
	B.2.	Provide a Project Reference Form for each of no more than five projects (case studies), of similar scope and complexity, completed or being constructed by your firm. For each project (case study), complete the Project Reference Form (RFQ Attachment 6.3.b.). **<u>Project examples should include the following information:</u>** • Secure Facilities of similar size to this Project; • Challenges faced and process of how those challenges were met to ensure project was completed on time and in budget; and • Work evidencing energy conservation projects in correctional environment experience.
	B.3.	Provide a personnel roster listing the names of key people who the Respondent will assign to perform tasks required by this RFQ along with the estimated number of hours that each individual will devote to the required tasks. Follow the personnel roster with a résumé for each of the people listed. The résumé shall detail the individual's title, education, current position with the Respondent, and employment history. Also, provide a personnel roster and résumés listing the names of the individuals who the Respondent will assign to provide back up support to the key team members.
	B.4.	Provide a table that identifies the personnel named in B.3 that worked on any projects named in B.2, and their job titles for those projects.
	B.5.	Continuous Improvement Process – Describe how customer feedback is received and provide copies of feedback received from the last five projects completed. The projects completed can include projects worked on with the State. If you do not have a continuous improvement process in place, please so state.

RESPONDENT LEGAL ENTITY NAME:		
Proposal Page # (Respondent completes)	**Item Ref.**	**Section B— General Qualifications & Experience Items**
	B.6.	Provide documentation of the Respondent's commitment to diversity as represented by the following: (a) Business Strategy. Provide a description of the Respondent's existing programs and procedures designed to encourage and foster commerce with business enterprises owned by minorities, women, and Tennessee service-disabled veterans, and small business enterprises. Please also include a list of the Respondent's certifications as a diversity business, if applicable. (b) Business Relationships. Provide a listing of the Respondent's current contracts with business enterprises owned by minorities, women, and Tennessee service-disabled veterans and small business enterprises. Please include the following information: (i) contract description and total value; (ii) contractor name and ownership characteristics (*i.e.*, ethnicity, gender, Tennessee service-disabled); and (iii) contractor contact name and telephone number. (c) Estimated Participation. Provide an estimated level of participation by business enterprises owned by minorities, women, and Tennessee service-disabled veterans, and small business enterprises if a Contract is awarded to the Respondent pursuant to this RFQ. Please include the following information: (i) a percentage indicating the participation estimate. (Express the estimated participation number as a percentage of the total estimated contract value that will be dedicated to business with subcontractors and vendors having such ownership characteristics only and **DO NOT INCLUDE DOLLAR AMOUNTS**); (ii) anticipated goods or services contract descriptions; and, (iii) names and ownership characteristics (i.e., ethnicity, gender, Tennessee service-disabled veterans), of anticipated subcontractors and vendors. NOTE: In order to claim status as a Diversity Business Enterprise under this contract, businesses shall be certified by the Governor's Office of Diversity Business Enterprise (Go-DBE). Please visit the Go-DBE website at https://tn.diversitysoftware.com/FrontEnd/StartCertification.asp?TN=tn&XID=9265 for more information. (d) Workforce. Provide the percentage of the Respondent's total current employees by ethnicity and gender.

RESPONDENT LEGAL ENTITY NAME:		
Proposal Page # (Respondent completes)	**Item Ref.**	**Section B— General Qualifications & Experience Items**
		NOTE: Respondents that demonstrate a commitment to diversity will advance State efforts to expand opportunity to do business with the State as contractors and subcontractors. Response evaluations will recognize the positive qualifications and experience of a Respondent that does business with enterprises owned by minorities, women, and Tennessee service-disabled veterans and small business enterprises and who offer a diverse workforce.
SCORE *(for all Section B—Qualifications & Experience Items above)*: *(maximum possible score = 60)*		
State Use – Evaluator Identification:		

End of Section B

QUALIFICATIONS & EVALUATION GUIDE

SECTION C: TECHNICAL QUALIFICATIONS, EXPERIENCE & APPROACH. The Respondent shall address all items detailed below and provide, in sequence, the information and documentation as required (referenced with the associated item references). The Respondent shall also detail the proposal page number for each item in the appropriate space below. Proposal Evaluation Team members will evaluate and assign one score for all responses to Section C— General Qualifications & Experience Items.

RESPONDENT LEGAL ENTITY NAME:		
Proposal Page # (Respondent completes)	**Item Ref.**	**Section C— Technical Qualifications, Experience & Approach Items**
	C.1.	Provide a narrative that illustrates the Respondent's understanding of the State's requirements and project schedule.
	C.2.	Provide a narrative that illustrates how the Respondent will complete the delivery of scope of services, accomplish required objectives, and meet the State's project schedule.
	C.3.	Provide a narrative that illustrates how the Respondent will manage the project, ensure delivery of specified goods or completion of the scope of services, and accomplish required objectives within the State's project schedule.
	C.4.	Quality Control: Describe how your firm implements quality control throughout the construction phases.
	C.5.	Provide a narrative on the Respondent's process and experience in working with other team members, including architects, engineers, and general contractors. [Insert team members Proposers will be working with on this projects]
	C.6.	Provide a narrative that illustrates how the Respondent will coordinate the project execution in an operational prison.
SCORE *(for all Section C—Qualifications & Experience Items above)*: *(maximum possible score = 40)*		
State Use – Evaluator Identification:		
State Use – RFQ Coordinator Signature, Printed Name & Date:		

End of Section C

RESPONSE PACKAGE COVER SHEET

Best Value Procurement Option One

for

LED Lighting Replacement and Upgrades
Turney Center Industrial Complex

SBC Project No.: 140/001-04-2015-03

Tennessee Contractor License Information

Any blank spaces may cause Proposal to be unacceptable and rejected.

Provide contractor license number, expiration date, and classifications for Respondent as applicable and in accordance with State of Tennessee licensing law.
Provide all names as used for licensing or other legal transactions.

Respondent Identification:

Respondent _____

Address _____

Tennessee Contractor License information:

License Number _____

License Classification(s) applicable to Project _____

License expiration date _____ $(_____)
Dollar Limit

Project Reference Form

Project

Utilize project reference forms with Section B, Qualifications and Experience, of the Qualifications and Evaluation Guide.

RESPONDENT NAME:	

Owner/Agency Name:_____

Address:_____ City:_____ State:_____ Zip:_____

Contact Person's Name:_____ Title:_____

Phone:_____ E-Mail:_____

Project Information:

Project Title:	
Owner's Project or Contract #:	
Project Location (City, State):	
Construction Start Date:	
Construction Completion Date:	
Project Square Footage (New):	
Project Square Footage (Renovation):	
Dollar Value of Construction: $	
Project Executive:	
Project Manager:	
Other Key Personnel (Project Lead and Team Members):	
Third Party Commissioning Agent (if used):	
Sustainability Criteria (if used):	

Project Reference Form

Project #

***Utilize project reference forms with Section B, Qualifications and Experience, of the Qualifications and Evaluation Guide*.**

RESPONDENT NAME:	

A. Provide a brief description of the project that includes the scope of the work and the services provided by your firm. Relate the work in this project to the scope and required services contained in the RFQ.

RFQ

SCORE SUMMARY MATRIX FORMAT

	Qualification & Experience Maximum 60 Points						**Project Approach** Maximum 40 Points						**Q&E+PA** Maximum 100 Points
Evaluator	1	2	3	4	5	**Average**	1	2	3	4	5	**Average**	**Total Q&E+PA**
Submitting Companies													
Contractor A													
Contractor B													
Contractor C													
Contractor D													
Contractor E													
Contractor F													

The Average of the scores of all evaluators for the Q&E+PA will be totaled, and then the raw scores will be normalized to give the highest raw score the maximum points. The formula is:

$$\left(\frac{Respondent\ Average\ Score\ Total}{Highest\ Average\ Score\ Total}\right) \times Maximum\ Points\ =\ Total\ Points$$

Calculations shall result in numbers rounded to two decimal places.

RFQ Coordinator _____ Date _____

Tennessee Department of Correction

Owner Project Requirements for Designers

August 2016

Table of Contents

1. Definitions
2. General Reference Information for Project Phases
    a. **Design and Construction Document Phase**
    b. **Bid Phase**
    c. **Construction Phase**
    d. **Close-Out Phase**
3. Project Manual Reference Information
    a. **Special Request Information**
    b. **Division 01** General Requirements
    c. **Division 02** Existing Conditions
    d. **Division 03** Concrete
    e. **Division 05** Metals
    f. **Division 07** Thermal and Moisture Protection
    g. **Division 08** Openings
    h. **Division 09** Finishes
    i. **Division 10** Specialties
    j. **Division 11** Equipment
    k. **Division 13** Special Construction
    l. **Division 21** Fire Suppression
    m. **Division 22** Plumbing
    n. **Division 23** HVAC
    o. **Division 25** Integrated Automation
    p. **Division 26** Electrical
    q. **Division 28** Electronic Safety and Security
    r. **Division 31** Earthwork
    s. **Division 32** Exterior Improvements
4. Design Drawing Requirements
5. Attachments

1. Definitions

1. Facility Manager – Working for the Warden, the Facility Manager is responsible for maintenance of all systems at the institution.
2. Fiscal Director – Working for the Warden, the institutional Fiscal Director is responsible for tracking ALL equipment purchases for purposes of Inventory Control and Financial Accountability.
3. FPC – Facilities, Planning & Construction section of the Department of Correction.
4. PREA – Prison Rape Elimination Act
5. STREAM – State of Tennessee Real Estate Asset Management, if a capital project.
6. TDOC – Tennessee Department of Correction
7. TDOC Representative – The Director of Facilities, Planning & Construction or designee for the Tennessee Department of Correction.
8. Warden – The manager of an operational TDOC correctional facility
9. Warden's Designee – Liaison position assigned by the Warden to facilitate activity and communication between the construction project staff and the facility operations.

2. General Reference Information for Project Phases

The Designer shall include and/or incorporate the following information and additional project requirements into all Tennessee Department of Correction Capital Improvement, Capital Maintenance, and Institutional Maintenance projects.

A. Design and Construction Document Phase

1. The **Tennessee Department of Correction**'s name (as it may appear in your documentation and submittals) does not include an "s" at the end of the word "Correction".
2. The Tennessee Department of Correction is staffed with professional staff including the law enforcement staff charged with the safety and security of the institution. When referencing that staff, the proper nomenclature is 'Correctional Officer' or simply 'Officer'; references to 'guard' are unacceptable.
3. Refer to the specification sections titled "Detention Project Procedures" for information and procedures required for above ceiling, utility chase and wall cavity inspections.
4. The Project Manual shall include language that all proposed field modifications to perimeter or zone fencing; to exterior light fixture location and to security camera locations shall be reviewed and approved by TDOC prior to Designer approval of such relocations.
5. As required by TDOC, the Project Manual shall include language requiring a T-1 telephone/data line to be installed into the on-site construction conference room for State provided video equipment, and pay for all associated monthly charges through the completion of Substantial Completion for the project. Designer to confirm this requirement with TDOC prior to CDP documents.
6. The Designer shall acknowledge with the Design Development Phase (DDP) submittal and prior to release of the documents for bidding that the project design meets all requirements as applicable to:

   American Correctional Association (ACA) Standards, 4th Edition – ISBN 569911576 and the 2014 Supplement

   American Public Health Association – Standard for Health Services in Correctional Institutions – ISBN-10: 087553029X | ISBN13: 978-0875530291 | 3rd Edition

   The National Commission on Correctional Health Care – Standards for Health Care in Prisons – Published by NCCHC, also found under the title of Standards for Health Services – ISBN 0-929561-22-8

   2010 Americans with Disabilities Act Accessibility Guidelines (ADAAG)
7. The Designer shall acknowledge with the Design Development Phase submittal and prior to release of the documents for bidding that the project design meets all requirements of TDOC Policy 108.01 and associated manual; *Facility*

Construction, Renovation and Physical Plant Maintenance Manual, latest version.

8. Where other State of Tennessee agencies have oversight or regulatory control the Designer may be required to provide an additional set of documents and shop drawings for review purposes, i.e. food service, water treatment facilities, utility systems, power generators, etc. This should be finalized with the TDOC at DDP.

9. The Designer shall return the 'marked-up' design phase submittal comment sets (drawings, specifications and Review Comment sheets) to TDOC with the next design phase submittal. If the project is a Capital Project, all communication shall be routed through STREAM.

10. When designing any TDOC facility or planning any substantial expansion or modification of existing facilities, the Designer shall consider the PREA impact of the design, acquisition, expansion, or modification upon the TDOC's ability to protect inmates and staff from sexual abuse.

11. When installing or updating a video monitoring system, electronic surveillance system, or other monitoring technology, the Designer shall consider the PREA impact of how such technology may enhance the TDOC's ability to protect inmates and staff from sexual abuse.

12. The Designer shall provide as a part of the DDP phase submission documentation that the design team has reviewed the facility design and/or renovation modifications in regards to PREA related issues with TDOC. TDOC identified issues are to be reflected in DDP and subsequent phase documents. Meeting minutes should reflect 'blind space' issues, camera locations, updating of existing monitoring systems to assist in PREA compliance requirements.

13. All electronic submittals, telephone discussions, letters, fax's, etc. during the design and construction phases shall be followed-up with hard copy submittals. Appropriately routed email documents are considered as "hard copy" documents.

14. Designer shall "edge label" all final Project Manuals, Reports, Binders, etc. provided to TDOC with the project name, and SBC number, if applicable.

15. Designer shall provide, in addition to the Designer's Manual requirements, one additional complete set of all color boards, product samples, etc. for TDOC's use during construction.

16. All exterior and interior color schemes shall be reviewed prior to the end of DDP and approved by TDOC and the department's Security Threat Group Coordinator to minimize impact of gang oriented colors.

17. Designer shall submit with the Design Development Phase submittal, for review and approval by TDOC and STREAM, full-color catalog cut information on all fixtures, equipment, hardware and other visual items to be specified as a part of the project. These fixtures shall include but not limited to HVAC equipment, light fixtures, plumbing fixtures, door hardware, doors, security hardware, security electronic equipment, audio-visual equipment, kitchen equipment, fire alarm

devices and controls, etc. Designer shall up-date this information prior to completion of the CDP. Each individual catalog cut/information sheet shall be referenced back to the product identifier as shown on the drawings or specification section, and shall provide information on all accessories, options, etc. to be included / provided. Where various models are shown on the same cut sheet clouds or arrows shall be used to indicate the selection applicable to the project. Many products utilized on TDOC projects will include a 'DETENTION' option on the product cut sheet, the DETENTION option where available, should be considered as standard.

18. Designer shall provide a permit schedule for all TDEC required permits, to include but not limited to the time-line(s) for submittal(s), responsibility of submittal, date permit must be in-place, etc., for all project related construction, and TDOC and/or STREAM required (TDOC is the submitting agency) permits. Schedule shall be submitted with the DDP submittal package and up-dated prior to completion of 95% CD documents. Designer shall assist the TDOC representatives in any presentation required by any authority having regulatory approval (AHJ).

19. The project's design intent, documents, specifications, etc. shall not require TDOC and/or STREAM to submit for approval of a waiver or variance related to any building or fire code item unless specifically approved, in writing, by TDOC and STREAM during the design phases. The Designer shall not instruct the Contractor or allow the Contractor to seek a waiver or variance of any building or fire code without written approval of TDOC and STREAM.

20. The Designer shall notify TDOC and STREAM of any TOSHA designated 'confined space(s)' included in the design documents. Notification shall occur no later than the Design Development submittal. TDOC prefers no confined spaces to be included as a part of new construction. Inclusion of any confined space in new construction requires written approval of the TDOC Director of Facilities, Planning & Construction as a part of the Design Development approval. In renovation projects identify any affected confined space (renovation or new) that will occur at the DD Phase.

21. Unless for a regularly scheduled project meeting, STREAM, the Designer and all consultants shall check-in with the Warden's office immediately upon entering a TDOC facility and prior to visiting any area, either inside or outside the secure compound of the facility.

22. In compliance with the provisions of Federal Statute and the provision of TCA 65-31-101 et al, the Designer shall be responsible for marking all appropriate drawings with instructions to the contractor to identify all underground utilities in areas where excavation is to occur. The utility marking should be limited to painting in lieu of using wire flags due to security concerns with the wires in a State correctional facility.

23. The Designer shall confirm that all existing utility service lines are adequate for the proposed project tie-ins. All existing utility line "cuts and/or tie-ins" shall be

inspected by TDOC representatives (and STREAM representatives for Capital Projects) prior to back filling/completion of tie-in.

24. Designer shall discuss with TDOC at DDP any computer systems to be supplied by TDOC or the contractor in regards to TDOC requirements for said computers or servers to be included in project installation.

25. Project required site and Central Office staff training on new and/or updated devices, systems, etc. is of prime importance to TDOC. Any new system or equipment training identified in the Construction Documents is to be discussed with TDOC at CDP submission review to determine initial and subsequent training requirements. Training should be initially scheduled in a minimum of 4-hour training modules on the subject equipment, system, devices, etc. with training aids and manuals for the participants. Subsequent follow up training shall be scheduled to occur at three, six and twelve month intervals following Substantial Completion to allow staff to retrain on the equipment, device, systems, etc. and to further develop their skills and operational questions. All training, to include follow up sessions, is to be video recorded per STREAM standards and turned over to the institution.

26. For projects with multiple work sites (e.g. re-roofing, loop, paving, etc.), the project manual shall include language that the contractor shall submit as a part of Pay Application submittal a site plan indicating the completed work areas/buildings and areas/buildings scheduled for work activities during the next payment period. See Attachment # 1 for examples.

27. The Project Manual shall identify that regardless of the size of the project, i.e., large facility construction or renovation, there is to be ONLY one date of Substantial Completion unless approved otherwise by TDOC at DDP.

28. All new software furnished by the project shall be the latest version at date of Substantial Completion. Contractor shall be required to provide one (1) year of paid upgrades and patches and manufacturer's software support commencing from the time of Substantial Completion of the project.

29. The Designer, consultant or contractor shall coordinate with TDOC Security Electronics group (ITS) who assist with specifying computer equipment, software, peripheral equipment prior to the close of DDP.

30. The Designer shall indicate in the Project Manual that the Contractor and its sub-contractors, system providers, integrators, etc., if permitted by TDOC, will be allowed to make use of an Ethernet modem to remotely connect to control systems and other equipment and systems. The connection will be for monitoring and troubleshooting purposes only. The Contractor shall be advised that the modem will not always be connected and they will need to contact appropriate staff at the institution to ensure connectivity when needed.

31. The Designer shall indicate in the Project Manual that if TDOC accepts or if new building(s) proposed by the Contract Documents are completed prior to the completion of site grading and/or final landscaping for the total project; the Contractor shall install and be responsible for the continued maintenance of

"gross" exterior air-filtering medium(s) on all exterior HVAC equipment, building fresh air intakes, etc. If new equipment becomes dirty and dust infiltrated, the Contractor shall be responsible for all duct and HVAC unit cleaning(s).

32. The Project Manual shall indicate that the Contractor provided or required construction photographs, digital or otherwise, inside TDOC facilities or of the project site and buildings shall become the property of TDOC and shall not be used for purposes other than as progress photos without the express written permission of the Warden and the TDOC Director of Facilities, Planning and Construction. Any photo's, digital and print, that include inmate faces shall be destroyed. This requirement shall include photos taken or construction photos used by the Contractor's sub-contractors, vendors, etc.

B. Bid Phase

1. With release for bids, the Designer shall also provide TDOC with PDF version of the construction documents including drawings and project manual. Provide one additional half sized set of drawings to FPC for distribution to the facility warden for his/her use.

2. All proposed addenda shall be reviewed and approved by TDOC and STREAM prior to distribution. Schedule receipt of review comments 24-hours prior to required public issuance of any addendum. Addenda shall be issued a minimum of 48-hours prior to bid date and time or as provided by state statute.

3. All specialty design consultants (security electronics, food services, detention hardware, roofing consultants, etc.) shall acknowledge and participate in all bid phase and construction phase proposed changes, adjustments, proposed substitutions, requests for information, requests for proposals, etc.

C. Construction Phase

1. All design team consultants shall submit field/construction observation reports and construction related photographs to TDOC and STREAM after each site visit.
2. Substantial Completion for all TDOC buildings, new construction and renovations, can only be established after all construction work is completed, and TDOC has cleared the building or construction for TDOC and/or inmate entrance and use. Clearance for use shall be issued by the TDOC. 'Completed construction' shall mean no construction materials (roofing materials, HVAC equipment, conduit, piping, CMU, wall board, ceiling materials, etc.) and no active construction work is required within the secure perimeter and/or inmate areas. All remaining punch list work shall be for adjustment, cleaning, touch-up and be minor in nature.

3. The Designer shall not take photographs and videos, digital or otherwise, on TDOC property or inside TDOC facilities without the express written permission of the Warden and the Director of FPC. Any photos and videos, digital and print, that include inmate faces shall be destroyed and not used or printed, reproduced or placed on display for any purpose. All construction photographs, required by the contract documents or not, shall not be used for any purposes other than construction related reports unless approved by the TDOC Director of Facilities, Planning & Construction. Finished construction photographs will not be allowed unless approved in advance by the Director of Facilities, Planning & Construction.
4. All Designer vehicles entering the construction work area are to be legibly marked with the company name and or logo. No unmarked vehicles are to be permitted within the construction work area.
5. The institutional inmate count is a significant event occurring multiple times during the day and night. Formal counts occur five times daily however, depending on current activity levels, etc., informal counts are common occurrences. Typically, during an institutional count the inmate population is sequestered in the cell or to a specific program area. ALL institutional movement of inmates is terminated for the duration of the count. Movement of the contractors forces MAY be affected by this restricted movement depending on where the current work is ongoing. Movement between institutional zones or through the security perimeter of the facility should be expected to be affected during counts, i.e., the movement of materials, supplies and workers should anticipate the institutional count times.

D. Close-Out Phase

1. Final close-out submittal shall include all contract documents in electronic (PDF) format and a complete set of editable AutoCAD drawings.
2. If requested, as a part of the Designer's project closeout, the Designer shall provide up-dated or new Physical Inventory Site and Building Plan Data Sheets.
3. Provide at project close out, or require the Contractor to provide a separate drawing(s) or floor plan(s) locating all the equipment, devices, etc. that will require periodic or yearly maintenance and/or inspections; i.e. fire dampers, smoke dampers, etc. Provided information shall be field verified by the Designer.
4. The contractor shall provide as-built documents that indicate the location of all fire dampers, smoke dampers, duct access doors and security barriers on the as-built floor plan backgrounds. This requirement is in addition to providing as-built documentation as indicated in other parts of the project manual. This document shall be delivered in the same format as the remainder of the as-built document.

3. Project Manual Reference Information.

A. Special Request Information

1. In all inmate accessible areas, exposed equipment and materials, including screws and other fasteners, shall be tamperproof.
2. Typically, areas below 12' AFF are to be secured utilizing security TORX fasteners.
3. All gas regulators and meters, medical gas bottles, etc. shall be enclosed within a chain-link cage (all sides and top), see the attached sample of a gas enclosure labeled as Attachment # 2.
4. All bollards constructed shall be fabricated with steel cap appropriately attached and finished.

B. Division 01 General Requirements

1. The Project Manual shall include language requiring the Contractor to be responsible for maintaining pedestrian and vehicular traffic on local roads adjacent to and directly leading to and/or through the areas that are affected by the construction project. Prior to changing any traffic patterns, the Contractor shall submit a Maintenance-of-Traffic Plan identifying how the vehicular and pedestrian traffic flows will be modified, subject to the review and approval of TDOC and authorities having jurisdiction. The Contractor shall provide proper signage and personnel to identify and manage temporary roadway relocations or traffic impacts.

2. Project Manual shall include a master list of all spare parts and a master list of all special warranties specified within individual specification sections. Spare parts requirements and listing of special warranties shall be reviewed and approved by TDOC no later than the CDP submittal.

C. Division 02 Existing Conditions

1. The Designer shall be responsible for locating all potential utility line conflicts, to include location and depth, and provide "conflict boxes", as required as a part of the construction documents; "Soft-dig" existing utilities as required. Where utility paths are unclear, ground-penetrating radar shall be utilized along the proposed path to mark existing utilities. Enhanced GPS mapping shall be utilized to map all new utility lines and noting proposed crossings of existing lines. Provide an enhanced GPS mapping document as a part of the closeout document package.

D. Division 03 Concrete

1. Due to the TDOC requirement that most floors are exposed concrete, the Designer shall provide adequate design and construction information to clearly indicate the procedures, responsibilities, and contractual outcomes expected by TDOC for all "exposed" concrete floors. This should include at a minimum floor flatness requirements, requirements for control joints, floor color and sealing requirements, number/size of cracks, finish variation, and staining need to be addressed. It is important to clearly define realistic expectations and determine how to quantify them.

E. Division 05 Metals

1. All housing building dayroom stairs shall be 'open riser' design.

2. Barbed tape obstacle (BTO) shall be installed per ASTM "Standard Practice for Installation of Barbed Tape, F 1911-05", or latest edition. BTO shall be wire-reinforced tape fabricated from 0.025 AISI 430 stainless steel with a Rockwell hardness of 40 – 45 only. Wire reinforcing shall be 304 stainless steel. Barb cluster shall be 4-inches on-center with 4 needle-sharp barbs. Each roll should consist of 51 loops with adjacent loops clipped at 5 equally spaced locations. Each roll should cover 25 linear feet when properly installed. BTO hog rings shall be 13 gauge 304 stainless steel attached at 12-inches on center, detection systems incorporated with the BTO will dictate alternative attachment requirements.

F. Division 07 Thermal and Moisture Protection

1. The TDOC has standardized to utilize white roofs on all structures where applicable. Although this requirement will contribute to energy conservation it is primarily influenced by the increased visibility for security personnel who frequently must retrieve weapons or other contraband items from our roofs.
2. Provide roof walk pads to and around all sides of all roof top equipment and provide an approximately 10-foot square area of walk pads on the roof at roof access scuttles or indicated ladder access locations. Ladder access locations shall be indicated by signage at the roof edge/coping. Provide a similar sized walk pad area(s) at the top and bottom of all ladders between roof areas.
3. Roof insulation attachment devices and procedures shall be reviewed and approved by TDOC. The type, length, color and use of screws, if used, to attach roof insulation shall be reviewed with TDOC prior to finalization of attachment procedures at DDP. The Warden and TDOC shall approve the construction phase procedures for use of screws inside a secure compound prior to final approval of bid documents. The Contractor shall be required to store roof attachment screws in locked containers, approved by the Warden, outside the secure compound. Daily use of screws shall allow for only the amount of screws needed for that days' work to enter the secure compound. At the end of each work shift, the Contractor shall remove all screws from inside the secure compound and return them to the locked container. Similar procedures shall be enforced for projects outside the secure compound. At the end of each work shift, the Contractor shall be responsible for confirming the work areas; roof and surrounding grade level areas have been cleared of all loose or damaged screws.
4. Re-roofing construction documents shall require the Contractor to inspect all roof drains prior to starting work on any roof, submit a report of conditions to the Designer. If the drain(s) is not working, the Contractor shall correct. After re-roofing is complete on each building, the Contractor shall re-inspect all roof drains for proper draining, and report to the Designer that all drains are working properly.
5. Roof insulation storage and handling requirements shall meet or exceed PIMA (Polyisocyanurate Insulation Manufacturers Association) Technical Bulletin #109, or latest edition. See Attachment # 3
6. Rigid Security Sealant (pick proof) shall be installed in joints (gaps equal to or greater than 1.5mm) at the following locations (See Attachment # 7 for additional information):
   - Door & window frames – interior
   - Exterior door & window frames (inside joint)
   - Plumbing fixtures in high security housing units
   - Fire extinguisher cabinets in concrete masonry

- Security diffusers/grilles in concrete masonry
- Toilet accessories
- Miscellaneous electrical & security electronics devices
- Handicap accessible cells/mirror box and sink unit (stainless) in all general population housing
- All applicable areas within security housing units
- Mirrors mounted in precast or concrete masonry in general population housing
- Mirrors mounted in precast or concrete masonry in program areas
- Stainless steel toilets & sinks

7. Flexible Security Sealant (pick resistant) shall be installed in joints (gaps equal to or greater than 1.5mm) at the following locations where building/system movement may occur:

- Casework in all inmate accessible areas
- Security light fixtures – concrete masonry or precast only
- Postal box
- Interior expansion/control joints in masonry and precast – from floor to ceiling or 10 feet AFF
- Woven security mesh partitions to structures
- Eye wash stations/fountains
- Toilet partitions – all areas with the exception of the facility administration building
- Switch & receptacle plates
- Access panels in concrete masonry
- The surface where cameras meet the wall within in-cell installations
- Interior horizontal concrete control/expansion joints
- All applicable areas in general population housing unless indicated otherwise in this section
- Mirrors mounted in precast or concrete masonry - staff toilets
- Food service equipment where required (the requirement for food service grade sealant overrides security joint sealant)

8. Fire Resistive Sealant shall be installed in all fire rated floors, walls and ceilings. In facility renovation projects, the Fire Resistive Sealant shall be applied daily before the end of work to maintain the integrity of the fire rated barrier.

9. Regular Sealant shall be installed in joints (gaps equal to or greater than 1.5mm) at the following locations:

    - Telephone enclosures (wall mounted) in the facility administration building
    - Exterior expansion/control joints in masonry and precast – to structure above
    - Exterior door and window frames (outside joint)
    - Exterior louvers
    - Lockers
    - Toilet partitions – in the facility administration building
    - Casework
    - Access panels in gypsum board partitions and ceilings
    - Vitreous china fixtures in general population housing
    - All joints in the facility administration building and outside fence
    - All joints in the sally port / armory buildings.

10. During the Design Phase, discuss with TDOC the application of roof access hatches. Typically, most roof access hatches will utilize an interior latching device and a hold-open device to keep the door open while staff is working on the roof, however in specific instances the TDOC will require that a roof hatch be accessible from the roof side for use as an emergency evacuation route. Additionally roof hatches accessed by a vertical ladder shall be provided with a standing platform to ensure that staff has free use of their hands to unlock the roof hatch lock while not hanging onto the ladder.

G. Division 08 Openings

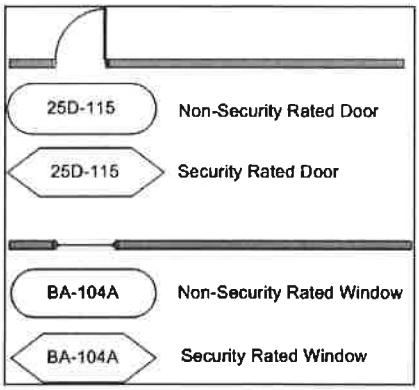

1. Door and window symbols on floor plans shall be different for standard non-security grade doors and windows; and those of security grade/rated doors and windows. See graphic at right.
2. All hollow metal door top and bottom edges are to be closed with flush 0.042 inch thick, end closures or channels of the same material as the face sheets. All edges of doors to be flush; no recesses will be allowed. Provide steel closing caps at all reinforced inverted edges.
3. Fire labels for fire doors and frames shall be metal tape type not metal tags.
4. Maximum gap between the bottom of a cell door (Maximum and Medium Housing units) and the finished floor shall not exceed 3/8 inch. The gap shall be accomplished with a finished and flush bottom door construction; a sweep attached to the door face is not acceptable. The minimum gap at cell doors bottoms shall be 1/8 inch.
5. Security doors that include a restraint port or food passage are to be constructed with the devices fabricated as flush mount on both sides of the door. Devices intended for the passage of food and to restrain the wrists are to be centered vertically on the door and at an elevation of 34" C/L to the bottom of the door. Devices intended to restrain the ankles are to be centered vertically on the door and at an elevation of 10" C/L to the bottom of the door. Detention hinges are required and the locking device will be a deadbolt functioning lock either paracentric or mogul (determined by TDOC prior to DDP). The open food / wrist restraint pass should form a platform with the open door perpendicular to the door. It is not a requirement that the lower ankle restraint pass open to form a perpendicular platform but it MUST NOT make contact with the floor.
6. Do not use 4-foot wide doors. Provide either a pair of 3-foot wide doors or a maximum 42-inch wide door. All doors over 3-foot 4-inches wide shall have 2-pair of heavy-duty hinges with non-removable pins (applicable to the installation, i.e. detention grade would be required on living unit or cell door, etc.). A continuous hinge appropriate to the application may be an acceptable option.
7. All security doors shall be equipped with a stainless steel door strike.
8. All equipment rooms (mechanical, electrical, security electronic, etc.) shall have door-opening widths sized to allow the removal of provided/installed equipment and the installation of replacement equipment. Do not provide 4-foot wide single leaf doors. See item #6 above.
9. All door closers shall be 'parallel arm' design with a fully enclosed case unless approved otherwise by TDOC.

10. In any utility space where the design could entrap a person behind a locked door, the space shall be equipped with a push-button panic alarm to notify Central Control of the location. This is not to be confused with spaces DESIGNED for confinement, i.e. cells or holding spaces; an example would be a chemical storage room behind a fire shutter or a freezer or cooler not equipped with release components.
11. In an occupied building (renovation projects) all exterior and interior wall 'cuts' for new doorways shall not proceed until the new door; frame and hardware are available for immediate installation of the door system. Frame, door and hardware must be installed during the same day the 'cut' is made in the wall, and the hardware must secure the door.
12. Designer shall provide a serviceability statement explaining how all exterior and interior glazing (above 10-feet AFF) is to be accessed for routine cleaning.

H. Division 09 Finishes

1. All acoustical ceiling tiles shall be 2X2 lay-in acoustical tiles, with no pattern in a white metal grid. Coordinate with TDOC if control rooms, etc. will require black ceiling tiles and grid.
2. Minimum thickness of gypsum board wall and ceiling boards shall be 5/8 inch, in inmate accessible areas where gypsum board is being considered, it is to be the high abuse type of gypsum board.
3. For all ceiling access panels in inmate accessible areas, all ceiling/wall access panels below 12' AFF shall be equipped with a panel locking system commensurate with the type of ceiling/wall being accessed for security sensitive walls/ceilings; for acoustical or gypsum board applications, the Director of FPC shall be consulted to determine the appropriate panel security. 'Slam lock' shall not be used. Access doors in fire rated walls/ceilings shall be 'self-latching; RR Brink 9025 with a Mogul cylinder, or equal.
4. Mechanical system piping may be painted to match room colors or may be painted to reflect the specific contents. If painted to match room colors a color coding and pipe labeling system must be incorporated. The Designer is cautioned to be guided by the minimum acceptable standards dictated by codes, as applicable. Where conflicts are identified, the Director of Facilities, Planning and Construction MUST be made aware of the conflict and the potential for resolution.
5. All exposed natural gas piping shall be painted "Safety Yellow". All exposed fire sprinkler piping shall be painted "Safety Red".
6. Color coding of water piping and labeling shall adhere to the schedule identified in Attachment # 4.
7. Color coding of mechanical piping and labeling shall adhere to the schedule identified on Attachment #4.
8. All exposed electrical conduits and boxes shall be painted the color of the wall or ceiling it is attached to or located adjacent to. Electrical junction box faceplates exposed in equipment rooms and occupied spaces are to be painted as follows:

    a. **Orange** Conduits serving critical systems/items on the generator(s).
    b. **Yellow** Conduits serving battery back-up items.
    c. **Brown** Conduits serving voltages of 120V to 207V.
    d. **Black** Conduits serving voltage of 208V or higher.
    e. **Blue** Conduits serving normal 120V voltages.
    f. **Green** Conduits serving security electronics systems
    g. **Red** Conduits serving fire suppression systems.

9. Specifications shall include language requiring the Contractor not to install gypsum board walls, interior painting, and installation of cabinetry until the building is dried-in, all windows and doors are installed, and the building HVAC system is fully functioning and running to maintain consistent humidity control. Comply with Gypsum Association requirements for winter related installation of gypsum board (GA-220-06 or latest edition).

I. Division 10 Specialties

1. In inmate accessible areas, all inmate toilet room doors shall swing out of the room and into the surrounding space. Staff toilet room doors shall swing into the toilet space. Medical exam rooms and other inmate medical service room doors shall be out-swing doors. Where possible and practical the door swing shall allow flow toward the path of egress.
2. Electric hand dryers require either a tile wall surface or stainless steel panel below the air discharge to protect the wall surface from water drips and splashes. Designer shall confirm the depth and location of the electric hand dryer meets ADA required clearance.
3. Handicap bars in restroom accessible to inmates shall have ratings for downward load, pull-up load and pullout force of 250#.
4. Each mechanical room or room containing an Uninterruptable Power Supply (UPS) shall have displayed a wiring diagram (riser diagram is not acceptable) of all electrical circuitry and components entering, contained within and exiting the room and shall show connections to other mechanical rooms/buildings. The diagram shall be displayed on a structural wall and be clearly visible. The diagram shall be enclosed within a protective covering.
5. The Designer shall require field labeling of all exhaust fans and other roof top equipment. Exhaust fans for isolation rooms are to be marked specifically 'Isolation Room Exhaust', identifying the risk associated with that equipment.

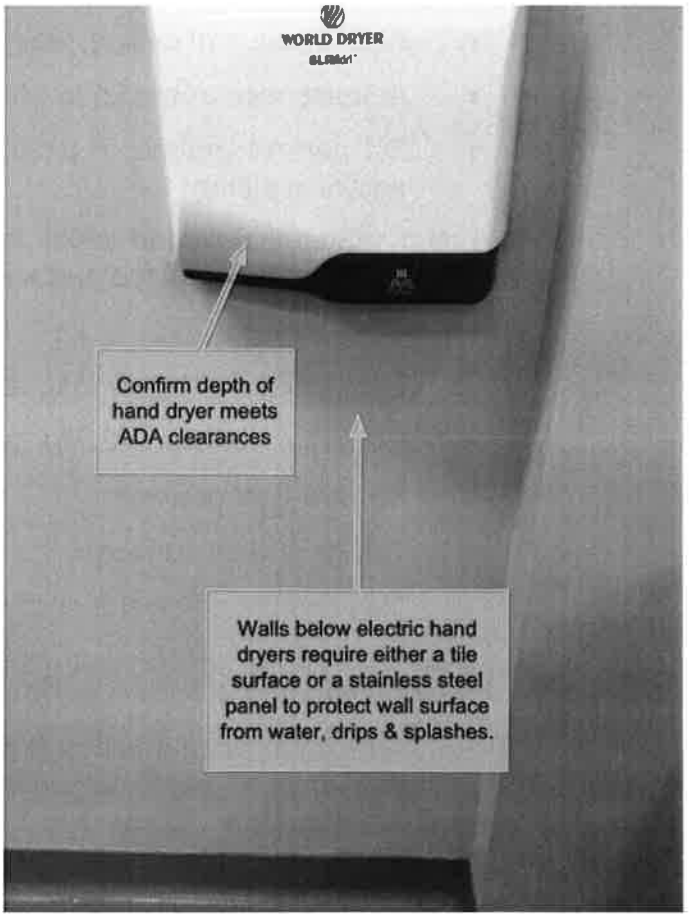

6. ALL mechanical system piping must be labeled. Labeling must include, but not be limited to:
   - The contents of pipes could affect procedures during emergency situations
   - The contents of pipes are hazardous
   - The flow direction of the contents is unknown
   - The flow needs to be redirected for maintenance
   - One or more valves need to be shut off for maintenance

7. Every pipe must have pipe markers that are visible from any location from which the pipe can be seen. Piping located above the normal line of vision should be labeled below the horizontal center line of the pipe. Piping located below the normal line of vision should be labeled above the horizontal center line of the pipe.
    - To indicate direction of flow by labeling with arrows at one or both ends of the label
    - To be visible from the point of normal approach
    - At any line entry or re-entry point
    - Near valve, flanges, and changes in pipe direction
    - At both sides of ceiling, wall, or floor penetrations
    - At least once every 25 to 50 feet on straight pipe runs
    - On parallel groups of piping the labeling should be installed aligned with adjacent piping
8. Label material selected shall take into consideration the environmental and adhesion properties of the surface in use, ie:
    - Cold storage
    - Unsmooth and highly textured surfaces
    - Corrosion resistant (to the label or surface)
    - For low-light settings
    - Oily or greasy surfaces
    - Resistant to salt water spray
9. Labels affixed to mechanical piping is sized according to the schedule identified on Attachment # 4.
10. Each electrical room shall have displayed a wiring diagram (riser diagram is not acceptable) of all electrical circuitry and components entering, contained within and exiting the room and shall show connections to other electrical rooms/buildings. The diagram shall be displayed no higher than 6 feet AFF on a structural wall and be clearly visible. The diagram shall be enclosed within a protective covering.
11. If the project includes new or renovated public accessible staff restroom facilities, the designer shall include signage per T.C.A. 68-15-301. Signs shall be at least 6-inches high and 14-inches long and read "For Good Health, Please Wash Your Hands".

J. Division 11 Equipment

1. It may be necessary for a transaction drawer, package pass, etc., to operate in a fire wall; the design must incorporate the protection of the opening.
2. Any equipment installation above normal working height is discouraged, however will be considered provided that mechanisms are provided for ease of access and removal of the equipment. No equipment is to be installed in a manner that would cause staff to stand on lower equipment or cause the staff maintaining the equipment to over-reach to access components.
3. When specifying equipment for a detention food service operation the Designer shall take into consideration that a correctional institution operates differently from a project for the general public. All equipment and processes should be thoroughly vetted with TDOC prior to finalizing the DDP documents, to include but not be limited to:
   a. For remote delivery of meals to isolated / locked units a determination must be made whether meals are to be transported in bulk or trayed conditions. The size and characteristics of the tray to be delivered to the cell. How the transportation is accomplished without conflict with the general institutional population. Meal service temperatures must be managed, the minimal acceptable temperature for hot meal service is 140° F, the maximum acceptable temperature for cold meal service is 41° F. Peripheral equipment must be sized to cell door food passages, tray machine equipment, delivery of meals to a 2nd floor, etc. Additionally, if a renovation project, any new equipment and peripherals MUST be compatible with existing equipment.
   b. Detention grade packages are required on all equipment, i.e. controls are covered, security fasteners are utilized, EVERYTHING is lockable or otherwise secured. If a product does not have a detention package option, review with the TDOC as to how the device can be made more secure either by selecting other options or by fabricating covers, etc.
   c. The TDOC may be in a position to lease specific pieces of equipment thus requiring the project to provide service and drains, etc. to that equipment, i.e., dishwashing equipment, etc.
4. Prior to Substantial Completion of major renovation or new construction projects, any equipment associated with food preparation, storage and disposal/cleanup shall be exercised via the preparation of two complete meals to be served to the contractors forces. The food components of the meals shall be provided by the institution. Inmates may be used in the preparation and serving operation as additional training. The designer and equipment supplier should be present to ensure that the equipment and processes operate as designed.
5. The primary institutional food service operation and some secondary food service operations (specifically satellite meal service such as in an annex) typically maintain a 3-day stock of foods. This requirement provides enough food to

manage the operation through a weekend without requiring delivery from the warehouse.

a. Cold food storage is maintained at -0° to 0° F freezer, thaw freezer (or cook chill storage) at 28° to 30° F and a refrigerated storage at 32° to 36° F.

b. Tempered storage should be provided to maintain the appropriate temperature of food products containing grains, i.e., cereals, flour, breads, etc. This component should be designed to maintain temperatures of between 50° to 60° and a relative humidity of 50 to 60%.

6. Disposition of food waste is a crucial component of the overall food service operation. All institutions compost food waste typically on site. Systems should be developed to manage the food waste in a sanitary environment to minimize odors and pests within the food service operation. The TDOC is familiar with and supports the use of extraction devices to help minimize the management of food waste.

Installed Equipment

7. When specifying equipment for a project the Designer shall take into consideration that a correctional institution operates differently from a project for the general public. All equipment should be thoroughly vetted with TDOC prior to finalizing the DDP documents. Specifically:

   a. Correctional laundry systems wash and dry clothing in mesh bags (the whites and colors might be separated but all the colors are washed and dried within the mesh bag) – thus standard load configurations for washer to dryer ratios do not work.

   b. Detention grade packages are required on all equipment, i.e. controls are covered, security fasteners are utilized, EVERYTHING is lockable or otherwise secured. If a product does not have a detention package option, review with the TDOC as to how the device can be made more secure either by selecting other options or by fabricating covers, etc.

8. In inmate accessible areas, fire alarm pull stations are single action key activated, i.e., turning a key activates the alarm. ALL key activated pull stations are to be KEYED ALIKE, provide 10 spare keys per building. Additionally, discuss with the owner prior to the completion of DDP where fire extinguisher cabinets can be commercial, lockable or detention grade.

9. When installing equipment for a project the Designer shall take into consideration that in many instances a prisoner may be in restraints, an escort may be present, thus tolerance for clearances should be taken into consideration. Examples:

   a. Examination rooms may need to be occupied by a health care provider, the patient and an escort(s).

b. When administering medications it is important that the health care provider be able to witness the inmate taking the medication, thus visibility and the availability of a water fountain within the line of sight is important.

Identification of Movable and Sensitive Installed Equipment

10. Capital funded moveable equipment installed by the contractor's resources must be included in the institutional property inventory. Construction documents should instruct the contractor to coordinate installation of this movable equipment with the institution's Fiscal Director to assure that the equipment is properly documented.

11. This requirement does not apply to 'fixed equipment' such as built-in-furniture, lights, plumbing fixtures, etc., as they are considered fixtures and a part of the building.

    a. There are certain characteristics of 'equipment' to which consideration should be given in making a proper determination; however, discretion is necessary in applying the definition in order not to classify equipment as items that probably should be treated as expendable supplies and material.
    b. Equipment generally retains its original appearance and shape with use which extends over a period in excess of three years, whereas materials and supplies usually change in appearance and shape as they are used and are consumed within a relatively short period of time.
    c. Equipment is non-expendable. If the article is damaged or parts are worn out, it is usually more feasible to repair it than to replace it.
    d. Equipment does not lose its identity through incorporation into a different or more complex unit.

12. Movable equipment is defined as items of a movable nature, having a minimum unit cost of $5,000.00, and having an estimated life of at least three years.

13. Sensitive Minor Equipment. These are items which are both vulnerable to theft and have a unit cost or fair value between $1,500 and $4,999.99. The following items are defined and are an example of sensitive minor equipment: cameras, camera lenses, computers, fax machines, firearms, forklifts, radios transmitters and receivers, LCD/multimedia projectors, microscopes, motorized vehicles, oscilloscopes, printers, riding lawn mowers, radio scanners, spectrum analyzers, switches/routers/hubs, televisions, tractors, vector scopes, video cameras, video recorders and players, and waveform monitors. All firearms must be recorded regardless of price.

K. **Division 13** Special Construction

1. All freezers and coolers shall have hardware that allows for 'pad-locking' of all doors and a minimum of 60" width for pallet access.
2. If the project includes a housing component dedicated to manage a suicidal offender the following design criteria must be incorporated in the design:

    a. Cell doors: larger vision panels top and bottom with abrasive resistant polycarbonate glazing to provide an unobstructed view of the entire cell.
    b. Swing door: with no interior handles/knobs protruding into the space. Use of recessed door pulls is recommended.
    c. Restraint/food passages: designed to be flush on the interior of the cell when secured.
    d. Ventilation: designed to be flush mounted to the wall or ceiling, holes to be no larger than 3/16" diameter.
    e. Window: provided with an outside view.
    f. Furnishings: no clothing hooks to be provided, any shelving to be provided with sloped hinges, triangular end plates to prevent tie-offs. No standard steel bunks, utilize specialty mental health furnishings with restraint attributes.
    g. Fire Sprinkler: break away type with protective cone if exposed.
    h. Electrical outlets: arc ground fault protected with utility cut-off to the cell within the chase.
    i. Location: 24/7 observation is required, locate the cell as close to the designated officer's station as possible.
    j. Camera: ceiling/corner mounted camera with tamper proof housing and security caulked to the ceiling and walls. Lens for low light viewing.
    k. Intercom: ability for staff to monitor all sound from within the cell.
    l. Lighting: LED for examination, general and night lighting (dimmable) fixtures to be security caulked and include non-removable fasteners

3. If required as a part of the design scope, Airborne Infection Isolation (AII) rooms shall be designed for tuberculosis and other airborne infectious diseases, including varicella (including disseminated herpes zoster) and measles. The design shall meet CDC guidelines.

    The CDC guidelines for AII rooms include the following

    - Rooms have negative pressure relative to adjacent areas/corridors.
    - New AII rooms have a minimum of 15 air changes per hour (ACH).
    - Exhaust systems shall also be connected to generator power.
    - Preferably, the rooms should be exhausted directly to the outside away from air intakes, windows and walkways. Alternatively, they can be filtered through a HEPA filter unit.

- HEPA filter maintenance requirements: If an AII room is equipped with a HEPA filter, the filter shall be leak tested by a quantitative filter performance test, (e.g., the doctyl phthalate penetration test). Test(s) shall be performed at the initial installation by an industrial hygienist or ventilation engineer prior to Substantial Completion. At the one-year warranty inspection, an additional leakage test shall be performed on HEPA filters using a particle counter or photometer. A quantitative filter performance test (e.g., the doctyl phthalate penetration test) shall be performed at the initial installation and each time the filter is changed. Maintain records for all filter changes and testing.
- An AII room can be "validated" (but not "certified") as meeting the CDC guidelines (negative pressure, adequate air changes, proper ventilation, exhaust, filtering, etc.). An industrial hygienist or ventilation engineer shall validate whether or not an AII room meets the CDC guidelines.
- Negative air pressure shall be tested prior to Substantial Completion utilizing smoke tubes or visual checks (flutter strips).

L. **Division 21** Fire Suppression

1. In inmate accessible areas, fire alarm pull stations are single action key activated, i.e., turning a key activates the alarm. ALL key activated pull stations are to be KEYED ALIKE, provide 10 spare keys per building. Additionally, discuss with the owner prior to the completion of DDP where fire extinguisher cabinets can be commercial, lockable or detention grade.

M. Division 22 Plumbing

1. Provide a hose bib and a minimum of one floor drain in each mechanical room.
2. Unless approved otherwise by TDOC, pipe escutcheons should not be used. Seal wall opening with flexible sealant or sealant required to maintain wall or ceiling rating. See attachment # 5 for requirements for pick proof and pick resistant sealant.
3. In RENOVATION PROJECTS ONLY where it may be necessary to introduce underground piping into an existing building, it may be considered to bring the underground piping above the ground surface and enter the building above grade. In these approved instances a cover for the exposed piping will be required. A detail is included as Attachment # 6 representing a method of protecting the piping as it transitions into the building.
5. All inmate showers and toilets in Maximum, Close and Medium housing units shall be equipped with a computer based water management system. This system shall provide software that provides maintenance staff and officers varying levels of access suited to the specific needs of the unit or management team. The system shall have diaphragm control valves that shall operate normally with a time of use schedule and abuse timer with lock down and full lock out capability. These features shall be capable of remote control that communicates over the Ethernet Maintenance network system as well as by manual activation. To ensure problem free operation the water supply to each building shall have a self-cleaning filter to reduce maintenance on the valves. Also, the electric power to the control modules shall be on generator power with UPS or surge protection and isolated ground.
6. Where piping supports utilize saddles to reduce crushing of the insulation, these supports/saddles shall be permanently attached so that removal by inmates does not pose a security risk. Fixed saddles shall be equal to Buckaroos Hanger-Saddle Combo (http://buckaroos.com) or approved equal that includes a one-piece hanger/saddle design with rounded corners.
7. Trap primers shall not be used unless approved by TDOC. Waterless trap protection similar to Sureseal inline trap sealer inserts (see www.thesureseal.com/pe) is acceptable.
8. No plumbing piping shall be below the level of lighting fixtures within a room unless approved by TDOC during design.
9. Backflow preventer test ports shall not be located more than 72 inches above finished floor or permanent platform.
10. Each building shall be equipped with a separate shut off valve and Y strainer component on the domestic water supply.

11. Shock absorbers (water hammer arrestors) shall be located as close as possible to the piping served. Pipe extensions shall not be used to connect shock absorbers to piping.
12. Roof top HVAC units shall be provided with a roof hydrant (frost free and no drain/no winterizing required type) within 10-feet maximum of the unit.
13. Mechanically compressed fitting similar to Viega, Pro-Press, Nibco shall be used on domestic water piping above floor slabs. "Sweated" joints are not acceptable.
14. Piping shall be hung so that equipment does not bear piping load. Unions and flanges shall be installed to allow servicing and removal of equipment without dismantling piping. Tees shall be installed to prevent bull heading. Tees in same line shall be located a minimum of 10 pipe diameters apart.
15. Unless approved otherwise by TDOC, pipe escutcheons should not be used. Seal wall opening with flexible sealant or sealant required to maintain wall or ceiling rating. See attachment # 5 for requirements for pick proof and pick resistant sealant.
16. All inmate toilets shall be handicap height. This requirement does not imply that all toilets are to be handicap accessible – the appropriate codes should dictate where accessible toilets are required. With an aging prisoner population the TDOC has elected to utilize this as a standard height for toilets.
17. Plumbing system piping for laundries, water treatment or waste water treatment facilities must be painted to reflect the specific contents. The Designer is cautioned to be guided by the minimum acceptable standards dictated by codes, as applicable. Where conflicts are identified, the Director of Facilities, Planning and Construction MUST be made aware of the conflict and the potential for resolution.
18. On mechanical system renovation projects, piping adjacencies affected by the renovation shall be brought up to the same standard as the project mechanical systems.

N. Division 23 HVAC

1. Where piping supports utilize saddles to reduce crushing of the insulation, these supports/saddles shall be integral or permanently welded so that removal by inmates does not pose a security risk.
2. The Designer shall not include high-pressure steam boilers (15 psig or greater) as a part of the mechanical design without written approval of the TDOC Director of Facilities, Planning & Construction. This approval must be secured prior to completion of the Schematic Design Phase. If approval is granted for the installation of a high-pressure boiler(s), it shall be the responsibility of the Designer to prepare the necessary documents required by the Tennessee Boiler Board to request a variance to the 20-minute rule [see paragraph 0800-3-3-.04 (22) of The Boiler And Unfired Pressure Vessel Rules And Regulations]. The Designer shall accompany TDOC representatives to the variance approval meeting(s) and assist TDOC with the presentation(s) to the Boiler Board.
3. Condensate collection pans for HVAC or evaporator systems are to be constructed out of rigid galvanized metal (pan and sides with no plastic panels, etc.) and include an appropriately secured drain line.
4. No mechanical ductwork, etc. shall be below the level of lighting fixtures within a room unless approved by TDOC during design.
5. Refrigerant Tracking: The installation, removal and replacement of any refrigerant containing equipment shall be designed and/or performed in accordance with EPA Standards and Regulations. All equipment scheduled to be removed, including the refrigerant, shall be offered to the Owner. If the Owner refuses the existing equipment, the contractor shall be instructed to remove said equipment from the project site. A Refrigerant Service Order, form CR 3708, shall be required to be completed by the contractor for each piece of refrigerant containing equipment removed from service and an Appliance Input Form, CR 3709 for each piece of refrigerant containing equipment installed as a part of the construction contract. The use of CFC's shall be avoided. The Designer shall indicate the type of refrigerant to be used for all new equipment and obtain FPC approval prior to the completion of the Construction Document Phase. Sample forms are for reference labeled as Attachment # 7.
6. On mechanical system renovation projects, piping adjacencies affected by the renovation shall be brought up to the same standard as the project mechanical systems.

O. Division 25 Integrated Automation

1. Computer Networks, Fire alarm, Building Automation Systems (BAS), generators control systems and water control systems, shall communicate between buildings and with the control systems via the Ethernet Maintenance Network which is provided by TDOC.

2. Ethernet data cable and terminators will be CAT6 rated. Cable ends will be terminated with female fittings at the equipment end and on a patch panel provided by the contractor in a rack at the Maintenance network. Commercially made patch cables will be utilized to connect equipment to the network. All patch cables and termination connectors will be green in color.

P. Division 26 Electrical

1. Incorporate LED lighting fixtures in all high and low mast site lighting fixtures affected by the project.
2. Incorporate LED lighting fixtures in all wall pack and other fill lighting fixtures affected by the project.
3. Backup generators with fuel tanks requiring staff to access the controls above normal working elevations above grade level shall have elevated platforms installed to maintain proper service access. Elevated platforms shall have ladder or step access permanently attached to platform.
4. On mechanical system renovation projects, piping adjacencies affected by the renovation shall be brought up to the same standard as the project mechanical systems.
5. Where piping supports utilize saddles to reduce crushing of the insulation, these supports/saddles shall be permanently attached so that removal by inmates does not pose a security risk. Fixed saddles shall be equal to Buckaroos Hanger-Saddle Combo (http://buckaroos.com) or approved equal that includes a one-piece hanger/saddle design with rounded corners.
6. Confirm the following critical systems are connected to the standby power generator(s): **NOTE: The priorities identified are those from an operational perspective of an occupied correctional institution with a view toward inmate, staff and visitor security and safety, and our ability to maintain a safe and secure institution for the duration of an event. The Designer is cautioned to be guided by the minimum acceptable standards dictated by NFPA 101 and NFPA 70, and other codes, as applicable. Where conflicts are identified, the Director of Facilities, Planning and Construction MUST be made aware of the conflict and the potential for resolution.**

Emergency Systems (No specific order of importance)

A. Security Electronics UPS (including):
   - Programmable Logic Controllers (PLC)
   - Visual Display Control (VDC)
   - Door lock power
   - Intercoms
   - Cameras and recording
   - Fire Alarm Panels
   - Networks
     1) State network
     2) Maintenance network
        a) Fire alarm
        b) Building Automation System (BAS)
        c) Water control
        d) Generator monitoring

3) PLC network
4) Video network

B. Smoke Evacuation System
C. Emergency Lights or Emergency Light UPS
D. High Mast and Perimeter Lights (as defined by TDOC)
E. Fire Pumps (NWCX, NECX, SCCF, TAFT, RMSI)
F. Data Gathering Panels
G. Medical
   1) Negative pressure rooms (exhaust fans)
   2) Medical Gas Systems
H. Radio Transmitter and Console

Legally Required Standby (No specific order of importance)

A. Water plant
B. Sewer Lift & Sewer plants
C. Boilers
D. Water pumps (Domestic potable water)
E. Water Control System (ICON)
F. Coolers and freezers - Warehouse
G. Air Handling Units (AHU) – Strategic locations as defined by TDOC
H. Nurse call – (DSNF – TPFW)
I. Sanitary ice
J. Cell night lights
K. Receptacles
   1) Computers in Central Control, Check point
   2) Specific per operation and defined by TDOC
L. Fuel pumping station
M. Exhaust Fans

Optional Standby (No specific order of importance)

A. Maintenance building (specific as defined by TDOC)
B. Other E panel loads
C. Cooking equipment
   1) Ovens
   2) Tilt Skillet
   3) Hood system
   4) Coolers and Freezers (Kitchen)
   5) Outlets (specific as defined by TDOC)

Generator 'day tank' shall be sized for 72-hours of continuous run time.

7. Backup generators with fuel tanks that require staff to access the controls above normal working elevations above grade level shall have permanent elevated platforms installed to maintain proper service access.

8. Each electrical room shall have displayed a wiring diagram (riser diagram is not acceptable) of all electrical circuitry and components entering, contained within and exiting the room and shall show connections to other electrical rooms/buildings. The diagram shall be displayed no higher than 6 feet AFF on a structural wall and be clearly visible. The diagram shall be enclosed within a protective covering.
9. Electrical equipment rooms shall be sized to accommodate ALL electrical panels, conduits, etc. arranged around the perimeter of the space. Wing walls are NOT an acceptable design.
10. All electrical panel boxes shall be sized to accommodate adequate spare circuits for circuitry missed during the design (5% spare capacity), and spare circuits for the facility's future use (20% spare capacity).
11. Any equipment installation above normal working height is discouraged, however will be considered provided that mechanisms are provided for ease of access and removal of the equipment. No equipment is to be installed in a manner that would cause staff to stand on lower equipment or cause the staff maintaining the equipment to over-reach to access components.
12. Lighting fixtures in all mechanical, electrical, communication and security electronic rooms shall have wire guards or polycarbonate shields. All light fixtures in food service, warehouse areas, coolers, freezers, food service or food storage areas/rooms etc. shall have non-breakable bulb shields.
13. All lighting fixtures and ductwork shall be no lower than 96-inches above the finished floor. Lights should typically be lower than ductwork unless approved by TDOC during design.
14. Provide centrally located red LED lights indicating if enclosed chases, interstitial areas, etc. have lights switched on. An integrated door switch is an acceptable alternative in areas where closing the door behind the maintenance worker is impractical, i.e. cell plumbing chase as opposed to a building mechanical room.
15. The Designer shall complete all required applications, and provide corresponding drawings and documents required for any TDEC air permits associated with power generators. Refer to General Reference Information Item # 22.
16. Confirm or provide that there are sufficient electrical receptacles in building large areas/rooms to run floor buffers. Buffer cords are 25-feet or less.
17. Designer shall provide a serviceability statement explaining how all interior lighting fixtures and any other equipment above 12-Feet AFF are accessible for routine servicing.
18. LED lighting fixtures are the preferred approach to interior and exterior institutional lighting. A fixture conversion kit is not an acceptable alternative unless a specific type of fixture is not commercially available. Confirm with TDOC fluorescent light fixture bulb types; TDOC uses T-5 bulbs. No incandescent bulbs shall be used unless approved by TDOC. Provide adequate spare bulbs for each type of light fixture as a part of the construction documents.

19. Conduit support straps shall <u>only</u> be 2-hole designed for the applicable conduit and mounting hardware, meeting Fed. Spec. FF-S-760. Conduit shall be attached to the structure in inmate accessible areas with hardware/fasteners that cannot be removed with standard fastener tools.

20. Conduit shall run parallel or perpendicular to building lines. Horizontal runs shall be installed close to ceiling or beams and secured with approved conduit straps. Conduit shall be installed tight to the walls and/or ceilings at all bends.

22. Conduit supports shall be installed within one foot of all changes in direction in the conduit, and within one foot of each enclosure to which the conduit is connected. Horizontal or vertical runs in non-inmate areas shall be supported at not over four foot intervals. Horizontal or vertical runs in inmate areas shall be supported at not over three foot intervals. If EMT conduit is used, only steel compression type connectors will be allowed. Exterior applications shall be rigid conduit ONLY.

23. Confirm that all equipment have service access clearances as required by NEC and per the equipment manufacturer's recommendation. Note on the drawings that the required clearances are to be identified on the floor of the mechanical space either by painting a contrasting color or by permanently etching the concrete to identify the clearance requirement.

24. All exposed electrical conduits and boxes shall be painted the color of the wall or ceiling it is attached to or located adjacent to. Electrical junction box faceplates exposed in equipment rooms and occupied spaces are to be painted as follows:

    a. **Orange** Conduits serving critical systems/items on the generator(s).
    b. **Yellow** Conduits serving battery back-up items.
    c. **Brown** Conduits serving voltages of 120V to 207V.
    d. **Black** Conduits serving voltage of 208V or higher.
    e. **Blue** Conduits serving normal 120V voltages.
    f. **Green** Conduits serving security electronics systems
    g. **Red** Conduits serving fire suppression systems.

    Each junction box shall also be labeled indicating the type and voltage.

25. Minimum lighting levels for mechanical rooms and electrical rooms at 2.5-feet AFF shall be 40-foot candles.

26. The ground terminal position for electrical outlets shall be "down".

27. Exterior building mounted light fixtures shall not be located below 14-feet AFF unless approved otherwise by TDOC.

28. Coordinate with the owner regarding the placement of Owner Furnished Equipment, i.e., filing cabinets, fax machines, copy machines, printers, etc. to ensure that appropriate electrical power/data is available in the space and installed at the appropriate elevation (for filing cabinets).

29. In inmate accessible areas all electrical cover plates shall be "Security Wall Plates" e.g. Hubbell SWP series.

Q. Division 28 Electronic Safety and Security

1. The following items have been approved to be sole source providers of TDOC equipment and systems:
    - Detekion taut-wire system as the interior perimeter security fencing
    - Detekion Sensor-Coil for exterior perimeter security fencing
    - Omron PLCs with Omron's HMI software
    - Vicon video software. All components of the video system (i.e. cameras, DVRS, NVR, decoders, etc.) must be compatible with the Vicon Software.
2. When installing or updating a video monitoring system, electronic surveillance system, or other monitoring technology, the Designer shall consider the PREA impact on how such technology may enhance the TDOC's ability to protect inmates and staff from sexual abuse.
3. The assignment of network IP addresses are to be coordinated with the TDOC ITS staff prior to DDP.

R. Division 31 Earthwork

1. All lawn areas shall be a maximum 3:1 (approximately 20° above horizontal) slope for machine mowing.

2. Designer must review perimeter patrol road and inside the secure roadway trenching issues, and all other open trench issues with TDOC no later than the Design Development review.

3. All lawn areas disturbed by construction activities shall be re-graded and sodded by the Contractor. These areas must be maintained in an acceptable appearance during the entire construction phase.

4. The Designer shall include in the project documents that all site piping/conduit, etc., underground trenches are to be backfilled to finish grade elevation each day to prevent possible exposure to security issues and liability concerns. Each day, the Contractor should excavate utility trenches; install pipe/conduit, test and insulate as required and then backfill. The installation of the next section of pipe/conduit to be installed may be contingent on the previous days inspection and/or pressure testing before the Contractor will be allowed to tie onto the previously installed in ground pipe/conduit. This requirement may compel the Contractor to install the pipe at opposite ends of the piping working toward the middle, alternating crews from one end of the run to the other end, if they anticipate working the same crew every day and the pressure test having a 24-hour pressure test time frame. The maximum length of open trench during the workweek cannot exceed 12-feet. No open trenches will be allowed over the weekend. Open trenching under roadways and sidewalks must allow traffic flow at all times. Provide a detail on the drawings similar to that shown in Attachment # 8.

S. Division 32 Exterior Improvements

1. All security fencing fasteners, bolts, screws, etc. shall be installed with a high strength screw thread-locking fluid (applicable to the installation) similar to "Loctite Threadlocker 262". Security fencing also includes recreation modules, truck and pedestrian gates, and all attached accessories.
2. Fence fabric shall be 0.148-inch galvanized, 2-inch mesh with twisted top and bottom selvage. Fence ties shall be 9-gauge stainless steel high security round and mechanically installed. Bottom rails of all fences shall be secured to ground or grade beam with an anchor (fabricated from galvanized rebar) at the center of each span. Confirm fence systems and design with TDOC.
3. For all manually operated security enclosures and zone penetration swing gates either pedestrian or vehicle, the TDOC utilizes a complex fastening system that provides multiple locking points on the gate assembly and stainless steel gate handles on both sides of the gate secured by a single padlock accessible from both sides of the gate, see the attached sample of mechanical gate with a 3-point locking detail labeled as Attachment # 6. This system includes the following:
    - A concrete grade beam to ensure the ground to gate measurement is consistent.
    - No less than three hinges (TDOC may authorize reduction for small enclosures)
    - A single padlock application accessible from both sides of the barrier
    - No less than a three point latch device secured by a single padlock (larger height gates will require additional latch points)
    - Latch point lifting device is accessible from both sides of the barrier.
    - A secondary padlock point holds the raised latch in place while the gate is in motion.
    - On multi-leaf gates, the free leaf is securely anchored to the primary leaf and to the ground; the ground stake is secured to ensure that it cannot be retracted while the primary gate is secured.
    - A square tube assembly including a header is preferred.
4. ALL openings for remotely operated exterior gates must include a detail identifying a concrete grade beam at traffic level to provide a consistent bottom gap for the gate.

4. Design Drawing Requirements

1. Designer to provide TDOC with one set of project manuals and supportive documents and two full sets of design drawings. One set of drawings to be 30" x 42" or greater and one set of drawings to be 15"x 22" or greater. Documents are to be provided at each schematic and design development phase submittal, including final bid documents. Additionally during the design and final bid phase provide TDOC with an electronic version of the same documents.
2. New or existing buildings that have modified paths of exit. Provide (editable) drawings showing only walls and room names for each building. These drawings will be used for start-up planning and fire evacuation diagrams by TDOC (**Include room and door numbers**). Provide CAD, PDF file(s) and paper copies for each building. See sample evacuation diagram attached to this document as Attachment # 10.
3. Specifications sections are NOT to be incorporated as a component of the drawings. Specifications are to be submitted within the appropriate specification document(s).
4. All TDOC provided/TDOC installed furniture, fixtures, and equipment (FF&E), all TDOC provided/Contractor installed FF&E, and all Contractor provided/ Contractor installed FF&E shall be clearly marked and indicated on the Construction Documents.
5. If the project requires that TDOC perform aspects of the work with either inmate labor or by separate departmental contractor(s), the Designer shall include within the construction documents a summary sheet listing work required at each location, separate drawing sheets to identify Owner provided construction work, and shall provide specialty tool summary, material take-off and quantity information for all materials required for Owner provided construction work.
6. Provide and indicate on the mechanical and electrical room(s) plans and roof plan(s) sufficient clearance and access panels on all sides of equipment to perform maintenance activities. All HVAC equipment, water heating system pumps, motors, storage tanks, electrical panels and service devices, kitchen equipment, and other appliances shall be provided with access for inspection, service, repair and replacement without disabling or removing permanent construction, other appliances or any other electrical service, piping or ducts connected to the appliance being serviced, repaired or replaced. At a minimum, a level working space at least 30-inches deep and 30-inches wide shall be provided in the front of the control side to service the appliance. Adequate service space shall be provided at all required service points.
7. Review documents with TDOC to ensure that all materials, supplies and equipment are accessible to the mechanical space and the routing for that

access, i.e. if an internal mechanical space requires a larger door to remove equipment, ensure that the egress doors for that movement are sized accordingly, or if a piece of equipment has a component that must be removed or replaced to service (e.g. anode rod, heat exchanger plates, filters, safety discharge valves), that the appropriate clearance is provided.

8. Accessible Mechanical and Plumbing chases are required. Notify TDOC of any spaces where access is not immediately identified.
9. Confirm that all roof top equipment is 10-feet from the roof edge and note in the construction documents that nothing is to be installed closer than 10-feet to the roof edge.
10. All smoke/fire dampers shall be provided with maintenance access large enough to permit inspection and maintenance of the damper and operating parts. This includes access in the ductwork and into the chase/structural space provided for the duct/damper. Access doors to chases/structural spaces shall be permanently identified on the exterior by an adhesive label with letters not less than 1.25-inch in height (white lettering on red background) reading: SMOKE/FIRE DAMPER ACCESS. Access at ductwork shall have similar labeling.
11. Defining Walls: Within a prison there are various wall systems that require definition: acoustic, security, and fire rated are the most common. These need to be clearly defined on the drawings and not left to the discretion or determination of the contractor. Additionally, walls that need to be full height need to be clearly shown and indicated on the drawings with clear details of wall termination against ceiling or floor structure. Each case should be clearly shown similar to rated walls with a relatively clean floor plan noting the appropriate wall requirements.
12. Defining Ceilings: Within a prison there are various ceiling systems that require definition. Acoustic, security, and open to deck are the most common. These need to be clearly defined on the drawings and not left to the discretion or determination of the contractor. Each case should be clearly shown with a relatively clean reflected ceiling plan noting the appropriate ceiling requirements.
13. Each drawing sheet shall include a graphical scale representation for the specific image; should a drawing sheet present multiple details drawn at different scales, a graphical scale shall be provided for each scale represented.
14. If the subject project includes multiple buildings (more than three building types), provide construction documents in separate packages or sub-package drawing sets to include all design disciplines associated with a single structure/project as a group.
15. The Designer should define the fire extinguisher type, size, etc. on the drawings. The drawings should provide the location and fire extinguisher cabinets for fire extinguishers, as applicable. The drawings should indicate locations where it is appropriate for surface mounting of fire extinguishers. The purchase of the appropriate fire extinguishers will be tasked to the institution. The designer /

contractor must coordinate with the Institutional Facility Safety Officer with regard to accessibility and size of the recommended cabinets.

16. The Designer shall provide Site Utility Drawings containing a complete mechanical, electrical, fire protection, plumbing, drainage, backup power and communication systems being drawn on one sheet for each discipline. Multiple drawings can supplement the design package but cannot take the place of the drawings showing the complete system on one page. Where multiple systems are reflected on a sheet, i.e. water and gas lines, the drawing must represent the differing disciplines by color/line image changes for the different systems. All emergency, isolation valves, shut-offs and disconnects shall be clearly marked on the single sheet Site Utility Drawing.

17. The Designer shall review with the Warden the location and size requirements for on-site contractor parking, and the areas needed for material staging and storage. This information shall be indicated, as a part of the design documents no later than the DDP submittal.

18. Drawings shall include language and details requiring the Contractor to install and maintain 'truck wash-down areas' for all construction vehicles, trucks, etc. that use dirt/gravel access roads during construction.

19. ALL underground utility components are to be thoroughly documented on respective site drawings.

20. Geothermal components will identify:

    a. Location of each well, depth, subsurface strata and drilling issues encountered.

    b. Identify the withdrawal and re-injection sampling taps, flow meters, etc.

    c. Identify the method and routing of reject (bleed-off) water disposal and identify the location of disposal areas including but not limited to: any detention/retention pond, surface waters, storm sewers, etc. that could be impacted by a system discharge.

    d. The location of each end of vertical bore circuit and routing of header and distribution piping.

    e. Coordinates for each bore and pipe routing alteration based upon a permanent on-site benchmark.

21. TDOC Room Numbering Standard shall be used for all room numbers. See attached standard document Attachment # 11 which identifies the TDOC building and room numbering nomenclature.

5. Attachments

1. Sample Site Plan with Project Progress
2. Utility Gas Enclosure Standard Detail
3. PIMA Technical Bulletin # 109 11/11
4. Pipe Marking Schedules
5. Security Caulk Information Sheet
6. Pipe Underground Building Entry Detail
7. Refrigeration Service Order Form CR-3708 / Appliance Input Form CR-3709
8. Traffic Plating At Roadway Standard Detail
9. Mechanical Gate 3-Point Latch Detail
10. Sample Evacuation Plan
11. TDOC Building & Room Numbering Convention

ATTACHMENT # 1
Sample Site Plan with Project Progress

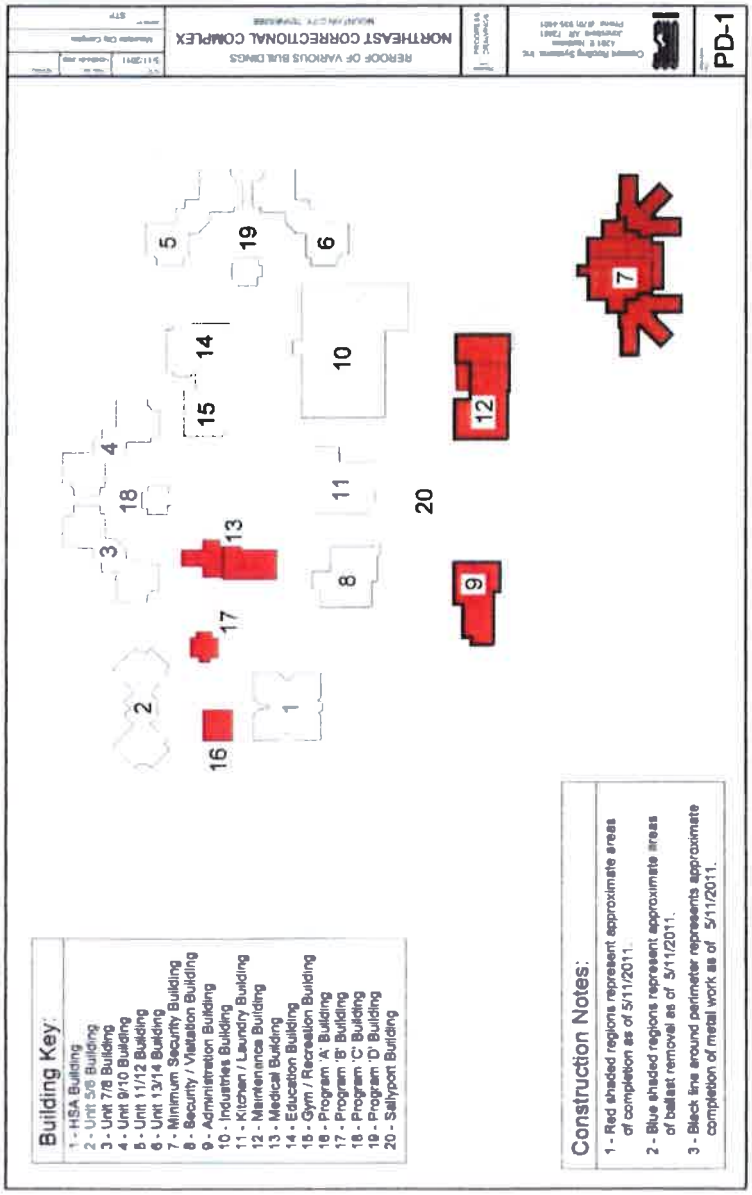

ATTACHMENT # 1
Sample Site Plan with Project Progress

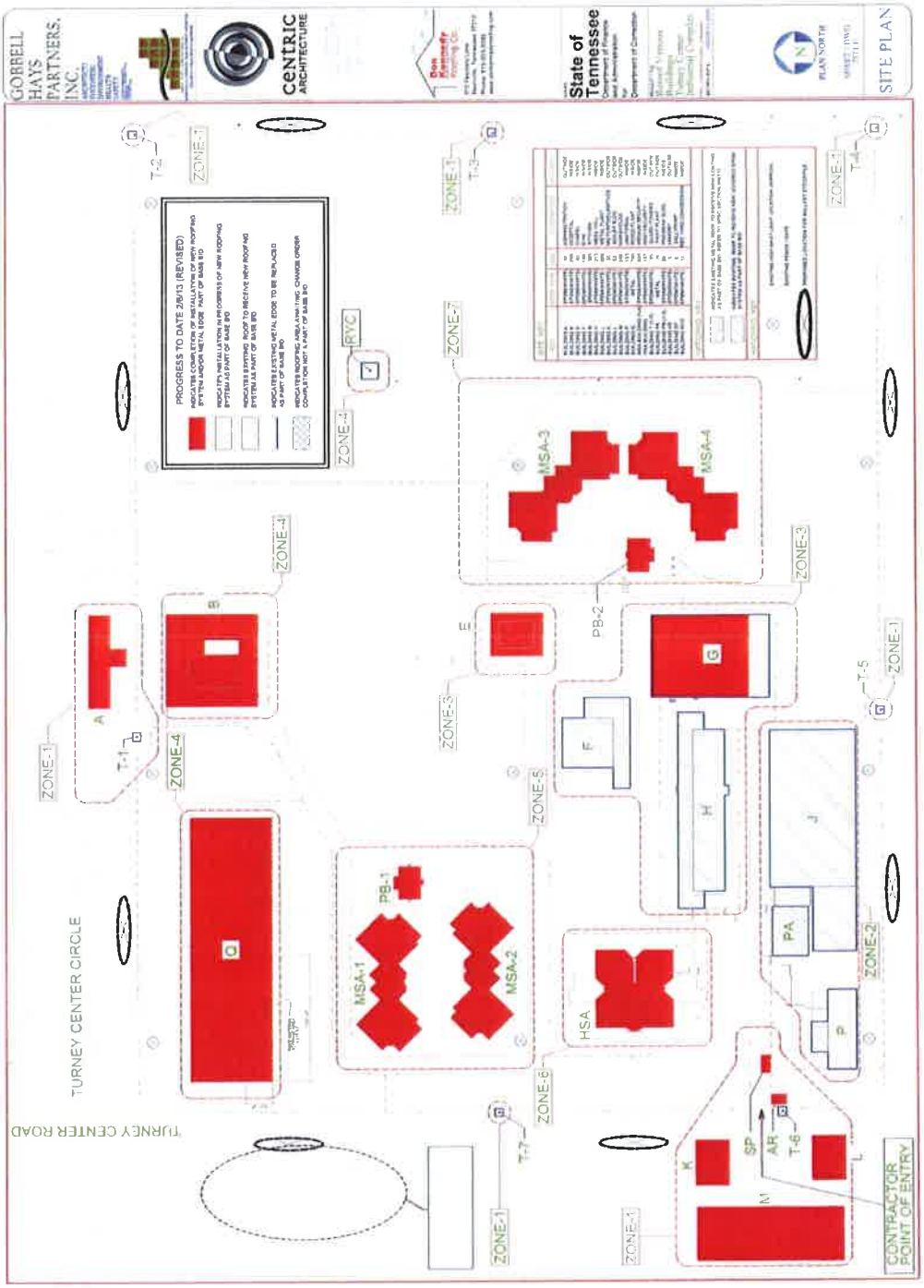

ATTACHMENT # 2
Utility Gas Enclosure Standard Detail

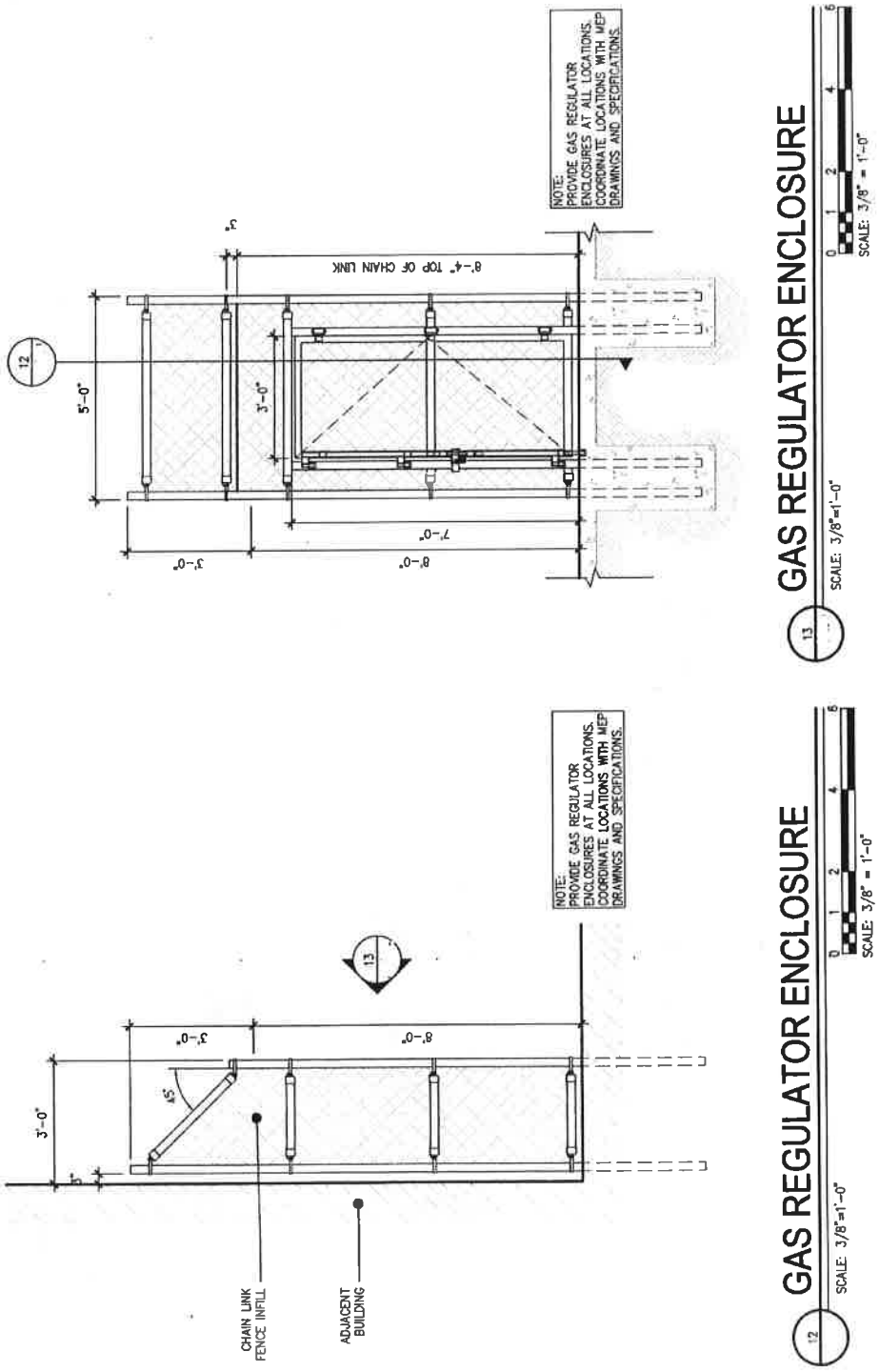

ATTACHMENT # 3
PIMA Technical Bulletin

PIMA Technical Bulletin #109

Storage and Handling Recommendations For Polyiso Roof Insulation

About Polyiso Insulation

Polyiso is a rigid foam insulation used in over 70% of commercial roof construction, in commercial sidewall construction and in residential construction.

The Benefits of using Polyiso include:

- *Low environmental impact*
- *Virtually no global warming potential*
- *Zero ozone depletion potential*
- *Cost effective, optimized energy performance*
- *Long service life*
- *Recyclable through reuse*
- *Recycled content (amount varies by product)*
- *Regional materials (nationwide production network)*
- *Meets new continuous insulation (ci) standards*
- *Quality Mark™ certified LTTR-values*
- *High R-value per inch of thickness*
- *Thinner walls and roofs with shorter fasteners*
- *Excellent fire test performance*
- *Extensive building code approvals*
- *Preferred insurance ratings*
- *Compatible with most roof and wall systems*
- *Moisture resistance*
- *Dimensional stability*
- *Compressive strength*

PIMA and polyiso products have received many environmental awards. These include an honorable mention in the Sustainable Buildings Industry Council's (SBIC) - "Best Practice" Sustainability Awards Program and the U.S. EPA's Climate Protection Award for the association's leadership in promoting energy efficiency and climate protection. The EPA also awarded PIMA and its members the Stratospheric Ozone Protection Award for "leadership in CFC phase-out in polyiso insulation and in recognition of exceptional contributions to global environmental protection."

POLYISO
The top performer.

Storage

Polyiso insulation is typically shipped protected by a plastic wrap, plastic bag or both. This factory packaging is intended for handling the polyiso in the manufacturing plant and during transit; it should not be relied upon as protection from the elements unless specified otherwise by the manufacturer.

Material delivery should be carefully coordinated with the roof application schedule to minimize outdoor storage.

When short-term outdoor storage is necessary, whether at grade or on the roof deck, the following precautions should be observed:

- Place the package on raised pallets or platforms (at least 3 inches [76 mm]) above ground and store flat. If possible, the pallets should be placed on a finished surface rather than on dirt or grass.
- Unless specified otherwise by the manufacturer, cover the package and pallet with a waterproof, breathable cover such as a canvas tarpaulin.

PIMA members do not recommend that polyiso roof insulation be stored outdoors for extended periods. If polyiso needs to be stored more than two weeks prior to installation, it should be stored indoors in a dry, well-ventilated warehouse.

Handling

Exercise care during handling of polyiso insulation to prevent breaking or crushing of the square edges and surfaces. Remove the polyiso bundles from trucks with proper equipment. Other means of mishandling, such as pushing pallets off the edge of the truck or "rolling" the pallet across the roof deck, must be avoided.

Product Application

Polyiso should always be installed on dry, clean roof decks in dry conditions. Follow the manufacturer's recommendations regarding product application to ensure performance to the intended design life of the roofing system. Apply only as much polyiso roof insulation as can be covered by the completed roofing the same day. Roof insulation that has become wet, damaged, cupped, or bowed must be replaced with solid, dry insulation.

Construction Traffic

Avoid excessive traffic during roof construction or on a completed roof surface. Although polyiso has been designed to withstand limited foot

ATTACHMENT # 3
PIMA Technical Bulletin # 109

traffic, protection from damage by construction traffic and/or abuse is extremely important. Roof surface protection such as plywood should be used in areas where storage and staging are planned and heavy or repeated traffic is anticipated during or after installation.

Some designers and membrane manufacturers specify the use of cover boards as a means of protecting the insulation. If specified, installers should ensure that the cover board used is compatible with all components of the roofing system, is acceptable to the membrane manufacturer, and meets specified fire, wind, and code requirements.

Final Thoughts

Polyiso roof insulation, like other roofing materials, requires a proper understanding of storage, handling, and application to result in a well-constructed and satisfactorily performing roofing system.

PIMA

For over 20 years, PIMA (Polyisocyanurate Insulation Manufacturers Association) has served as the unified voice of the rigid polyiso industry proactively advocating for safe, cost-effective, sustainable and energy efficient construction.

PIMA produces technical bulletins in an effort to address frequently asked questions about polyiso insulation. PIMA's technical bulletins are published to help expand the knowledge of specifiers and contractors and to build consensus on the performance characteristics of polyiso. Individual companies should be consulted for specifics about their respective products.

PIMA's membership consists of manufacturers and marketers of polyiso insulation and suppliers to the industry. Our members account for a majority of all of the polyiso produced in North America.

SAFETY

Polyiso insulation, like wood and other organic building materials, is combustible. Therefore, it should not be exposed to an ignition source of sufficient heat and intensity (e.g., flames, fire, sparks, etc.) during transit, storage or product application. Consult the product label and/or the PIMA members' Material Safety Data Sheets (MSDS) for specific safety instructions. In the United States, follow all regulations from OSHA, NFPA and local fire authorities; in Canada, follow all regulations from Health Canada Occupational Health and Safety Act (WMHS) and local fire authorities.

For more information on polyisocyanurate insulation, visit www.polyiso.org

PIMA
7315 Wisconsin Avenue, Suite 400E, Bethesda, Maryland 20814
Phone: 301.654.0000 • Fax: 301.951.0401
www.polyiso.org • pima@pima.org

ATTACHMENT # 4
Pipe Marking Schedules

Mechanical Room Color Coding

COLOR CODE

Material Properties	Letter Color on Field Color	Example
FLAMMABLE Fluids which are a vapor or produce vapors that can ignite and continue to burn in air	Black on Yellow	HYDROGEN
COMBUSTIBLE Fluids that may burn but are not flammable	White on Brown	ACETIC ACID
TOXIC & CORROSIVE Fluids which are corrosive or toxic or will produce corrosive or toxic substances	Black on Orange	NITRIC ACID
FIRE QUENCHING Water and other substances used in sprinkler fire-fighting piping systems	White on Red	SPRINKLER WATER
OTHER WATER Any other water, except for water used in sprinkler and fire-fighting piping systems	White on Green	BOILER WATER
COMPRESSED AIR Any vapor or gas under pressure that does not fit a category above	White on Blue	COMPRESSED AIR

PIPE MARKER SIZE CHART

Letter and Label Dimensions in accordance with pipe diameter

Outside Pipe Diameter Including Covering		Minimum Length of Label Field Color		Minimum Height of Letters	
.75" - 1.25"	19 - 32 mm	8"	203 mm	.5"	13 mm
1.5" - 2"	38 - 51 mm	8"	203 mm	.75"	19 mm
2.5" - 6"	64 - 152 mm	12"	305 mm	1.25"	32 mm
8" - 10"	203 - 254 mm	24"	610 mm	2.5"	64 mm
Over 10"	Over 254 mm	32"	813 mm	3.5"	89 mm

NOTE: It is recommended that pipes less than .75" in diameter be labeled with a permanent tag.

ATTACHMENT # 4
Pipe Marking Schedules

WASTEWATER TREATMENT PLANT COLOR CODING

TYPE OF PIPE/USE OF PIPE	COLOR OF PIPE
Sludge Lines	
Raw Sludge	Brown w/ black band
Sludge recirculation or suction	Brown w/ yellow band
Sludge draw off	Brown w/ orange band
Sludge recirculation discharge	Brown
Gas Lines	
Sludge Gas	Orange (or red)
Natural Gas	Orange (or red) w/ black band
Water Lines	
Nonpotable Water	Blue w/ black band
Potable Water	Blue
Water for heating digestors or buildings	Blue w/ 6" red band (150 mm) space 30" apart (760 mm)
Other Lines	
Chlorine	Yellow
Sulfur Dioxide	Yellow w/ red band
Sewage (wastewater)	Gray
Compressed Air	Green

ATTACHMENT # 4
Pipe Marking Schedules

WATER TREATMENT PLANT COLOR CODING

TYPE OF PIPE/USE OF PIPE	**COLOR OF PIPE**
Water Lines	
Raw Water	Olive Green
Settled or clarified water	Aqua
Finished or potable water	Dark Blue
Chemical Lines	
Alum or primary coagulant	Orange
Ammonia	White
Carbon Slurry	Black
Caustic	Yellow w/ green band
Chlorine gas or solution	Yellow
Fluoride	Light Blue w/ red band
Lime Slurry	Light Green
Ozone	Yellow w/ orange band
Phosphate compounds	Light Green w/ red band
Polymers or coagulant aids	Orange w/ green band
Potassium Permanganate	Violet
Soda Ash	Light Green w/ orange band
Sulfuric Acid	Yellow w/ red band
Sulfur Dioxide	Light Green w/ yellow band
Waste Lines	
Backwash Waste	Light Brown
Sludge	Dark Brown
Sewer (sanitary or other)	Dark Gray
Other Lines	
Compressed Air	Dark Green
Gas	Red
Other Pipes	Light Gray

PLACE MARKERS

- To indicate direction of flow by labeling with arrows at one or both ends of the label
- To be visible from the point of normal approach
- Near valves, flanges and changes in pipe direction
- Both sides of ceiling, wall or floor penetrations
- At any line entry or re-entry point
- Every 25' to 50' on straight pipe runs is typical

Label placement in relation to point of normal approach

Orientation of Labels

ATTACHMENT # 5
Security caulk information

Pick Resistant Caulk (DynaFlex™ SC or equal) is typically utilized in inmate accessible areas with intermittent staff supervision, i.e.; dayrooms, classrooms, janitor closets, showers, etc., where ordinary sealants are damaged or torn out by idle tampering and acts of vandalism. This caulk is utilized for sealing joints that are accessed for maintenance purposes. See notations # 1 in the graphic.

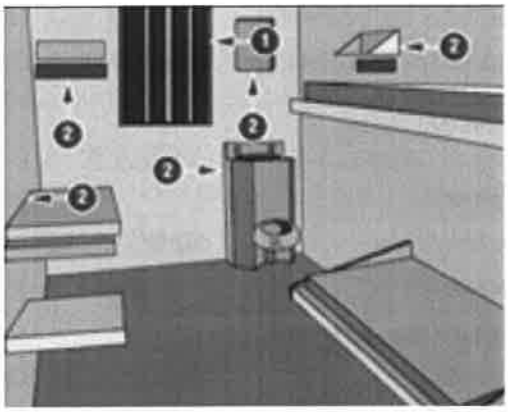

Security caulking requires exceptional adhesion, particularly in containment areas like inmate cells, etc. Since the sealant's higher hardness puts extra stress on the bond line, P-75 primer should always be used on porous substrates to obtain the proper adhesion. Steel, aluminum, polycarbonate and glass should be primed with P-120.

The sealant should not be used where it may come into contact with food products. Nor should it be used in areas where it may be subjected to harsh chemicals such as acids, strong alkalis, ketones, etc.

Pick Proof Caulk (Pecora DynaPoxy™ EP-1200 or equal) is typically utilized in areas where an inmate could be isolated for periods of time without staff supervision; i.e., housing unit cells, holding cells, infirmary, etc. This caulk is utilized for sealing joints that are typically not accessed for maintenance. See notations # 2 in the graphic.

Pick Proof Caulk should not be used in active joints or in areas where it might come into contact with food products. It should not be subjected to harsh chemicals such as acids or solvents and should not be applied in concrete joints less than 30-days old.

Exceptions would be expected to be discussed with the TDOC, Director of Facilities, Planning & Construction for consideration.

ATTACHMENT # 6
Pipe Underground Building Entry Detail

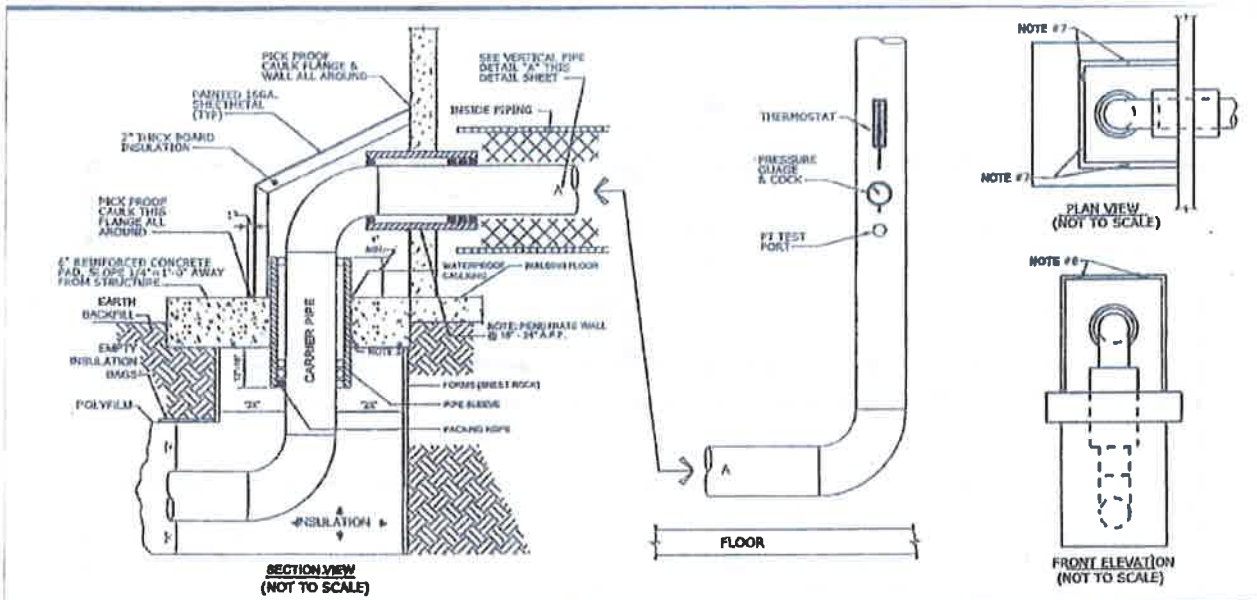

NOTES:

1.) PIPE SLEEVE SHOULD BE NEXT LARGER DIAMETER PIPE SIZE FROM CARRIER PIPE - SCHEDULE 40 MIN.
2.) ELASTOMERIC MECHANICAL SEAL CAN BE SUBSTITUTED FOR PACKING ROPE.
3.) COAT WITH BITUMASTIC OR SILICONE GREASE IMMEDIATELY PRIOR TO INSULATION INSTALLATION.
4.) THE "X" AND "Z" DIMENSIONS REFER TO THE "DRITHERM ENVELOPE DIMENSIONS DETAIL."
5.) PAINT COLOR SHALL BE SELECTED BY THE INSTITUTION
6.) ALL FASTNERS TO WALL AND SLAB SHALL BE TAMPER PROOF
7.) BOLT DOGHOUSE TO SLAB (4 PLACES TYPICAL) W/ 3/8"x2 1/2" S.S. ANCHOR BOLTS AND TAMPER RESISTANT NUTS.
8.) BOLT DOGHOUSE TO WALL (2 PLACES TYPICAL) W/ 3/8"x2 1/2" S.S. ANCHOR BOLTS AND TAMPER RESISTANT NUTS.

TYPICAL PIPE "DOG HOUSE" AND UNDERGROUND BUILDING ENTRY DETAIL (NOT TO SCALE) | 3

ATTACHMENT # 7
Sample Refrigerant Forms

STATE OF TENNESSEE
DEPARTMENT OF CORRECTION
REFRIGERANT SERVICE ORDER

Service ID: _____
Work Order #: _____
Date Issued: _____ Completed: _____
Technician(s): _____

Facility: _____
Location: _____
Appliance ID: _____
Sub Location _____ Model: _____
Manufacturer _____ Serial #: _____
Refrigerant Type: _____ Charge: _____ lbs _____ oz

Service Request – Why dispatched

Service Description – Briefly describe what you found upon arrival at the unit.

Recovery Unit used _____

☐ Isolated Leak ☐ Minor Maintenance Recovery Vacuum: "0" "10" "15" Inches 28.2 "

☐ Dispose of Unit ☐ Refrigerant Conversion ☐ Major Maintenance

☐ Recovery stopped, (Air) ☐ Transferred to receiver/ condenser, or pump out unit. ☐ Unit flat at "0" psig could not recover

Refrigerant	Cylinder ID	Type	Condition	Quantity
Recovered				lbs oz
				lbs oz
				lbs oz
Added No cylinder ID # if Contractor supplied				lbs oz
				lbs oz
				lbs oz

Leaks

☐ Leak Found Date: _____

☐ Leak Repaired Date: _____

☐ Initial Leak Verification Test Date: _____
Test done after repair before charging Method: _____

☐ Follow-up Verification Test Date: _____
Test done with unit running under normal load Method: _____

Leak Notes: Exact location of leak and description of how repaired

☐ Trace Gas Used R-Type: _____ Cylinder ID _____ Quantity _____ Lbs _____ oz

☐ Accidental Release Occurred Description of accident: _____

Estimated Amount Released _____lbs _____oz

Forward completed Form to Facilities, Planning & Construction

CR-3708 (Rev. 07-10) *DUPLICATE AS NEEDED* RDA 1773

Attachment # 7
Sample Refrigerant Forms

TENNESSEE DEPARTMENT OF CORRECTION
APPLIANCE INPUT

Facility: _____ Refrigerant Type: _____

Appliance ID: _____ Refrigerant Charge: _____

Method Used to Determine Charge: _____

Location: _____ Alert Leak Rate: _____

Appliance Type: _____ Horsepower: _____

Manufacturer: _____ Lubricant: _____

Model #: _____ Capacity: _____

Serial #: _____ Volts/Ph/Hz: _____

Duty Type: ☐ Comfort ☐ Industrial Process ☐ Under 50 lbs. Registration #: _____
☐ Commercial ☐ Other Refrigeration ☐ Other Required Certification Level: _____

Date Installed: _____ By: _____ General Notes: _____

Date Disposed: _____ By: _____

Duty Type: ☐ Refrigerant Recovered Upgrade & Retrofit Notes: _____
☐ Unit Tagged – "Refrigerant Recovered"

Status: ☐ Operational ☐ Non-Operational

COMPONENTS

Component Type	Component ID	Manufacturer	Model	Serial Number	Notes:

CR-3709 (Rev. 07-10) *Duplicate as Needed* RDA 1773

Attachment # 8
Traffic Plating At Roadway Standard Detail

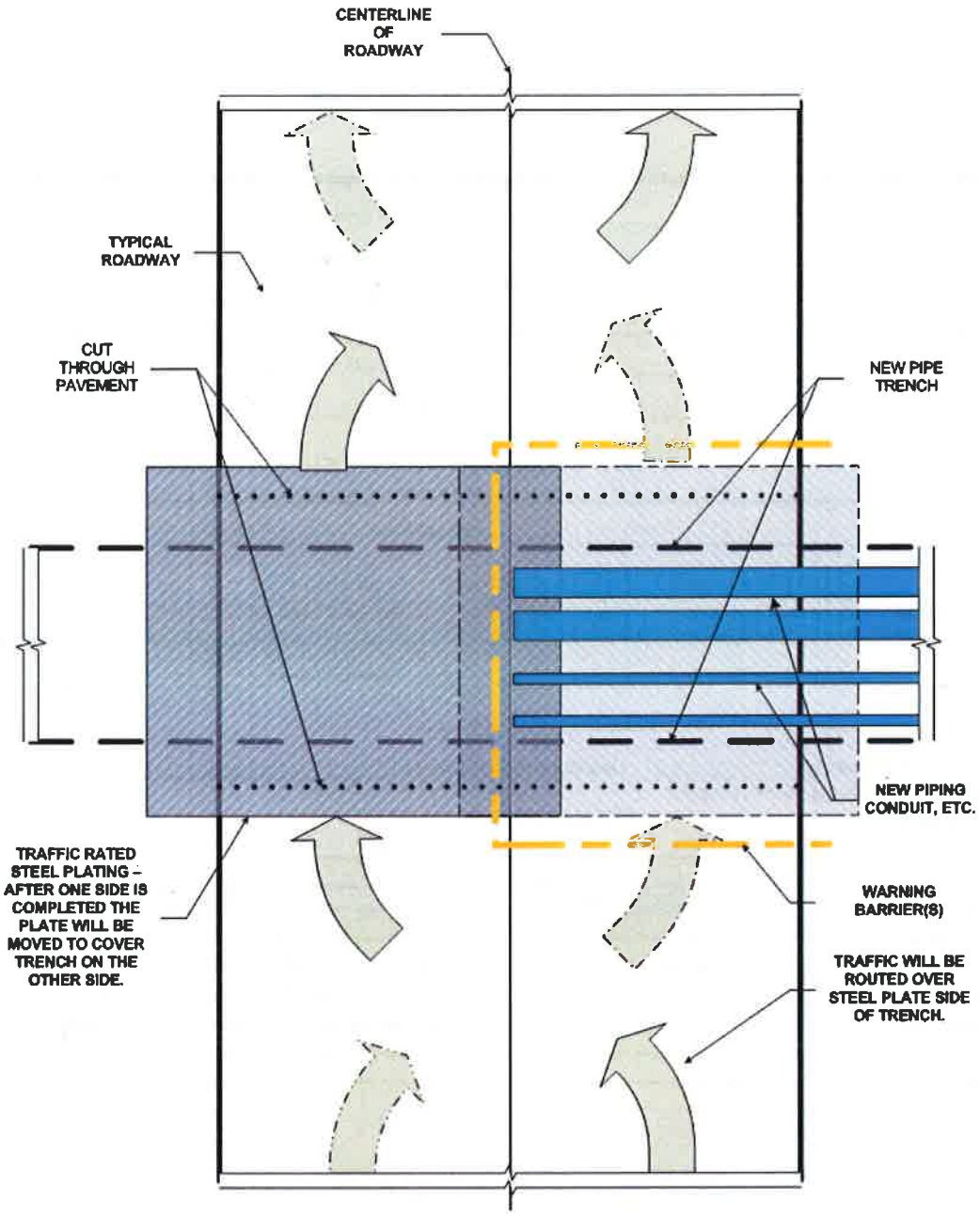

AT NO TIME DURING CONSTRUCTION WILL ANY ROADWAY BE CLOSED TO TRAFFIC. SIDEWALKS WILL BE HANDLED IN A SIMILAR FASHION

TYPICAL TRAFFIC PLATING AT ROADWAY CUT
NOT TO SCALE

ATTACHMENT # 9
Mechanical gate with 3-point lock

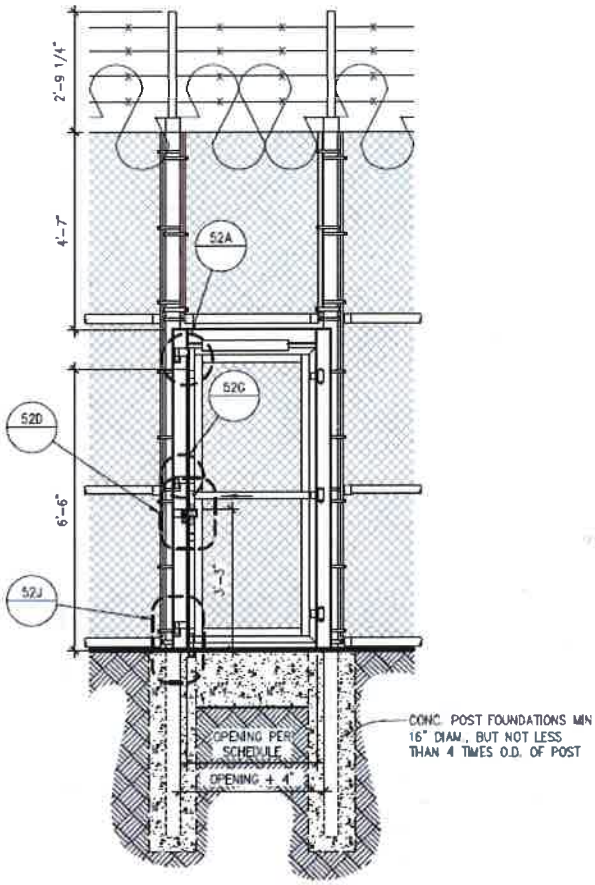

32 MAN GATE ELEVATION

SCALE: 3/8" = 1'-0"

0 1 2 4 6

SCALE: 3/8" = 1'-0"

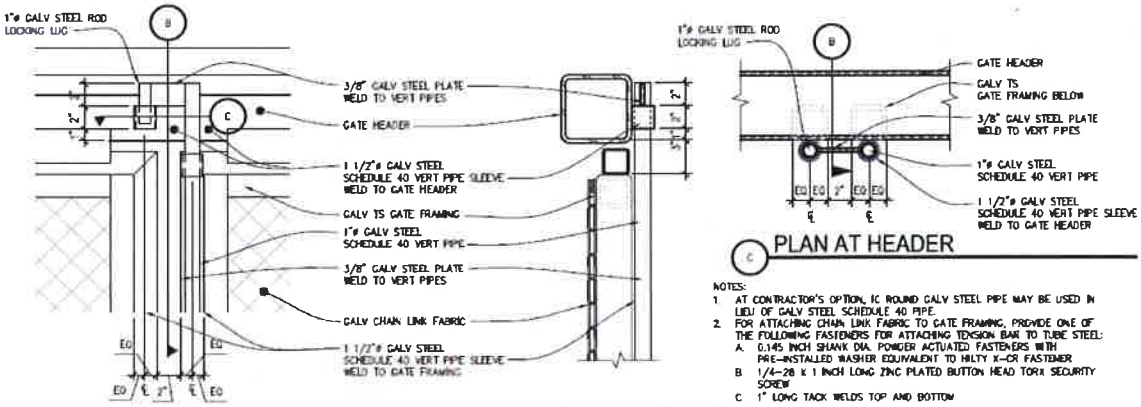

A ELEVATION AT TOP RAIL

B SECTION AT TOP RAIL

C PLAN AT HEADER

NOTES:
1. AT CONTRACTOR'S OPTION, IC ROUND GALV STEEL PIPE MAY BE USED IN LIEU OF GALV STEEL SCHEDULE 40 PIPE.
2. FOR ATTACHING CHAIN LINK FABRIC TO GATE FRAMING, PROVIDE ONE OF THE FOLLOWING FASTENERS FOR ATTACHING TENSION BAR TO TUBE STEEL:
   A. 0.145 INCH SHANK DIA. POWDER ACTUATED FASTENERS WITH PRE-INSTALLED WASHER EQUIVALENT TO HILTY X-CR FASTENER
   B. 1/4-28 X 1 INCH LONG ZINC PLATED BUTTON HEAD TORX SECURITY SCREW
   C. 1" LONG TACK WELDS TOP AND BOTTOM

52 TYP. DOUBLE GATE PLUNGER ROD ASSEMBLY DETAILS

SCALE: 1 1/2" = 1'-0"

0 1 2

SCALE: 1 1/2" = 1'-0"

ATTACHMENT # 9
Mechanical gate with 3-point lock

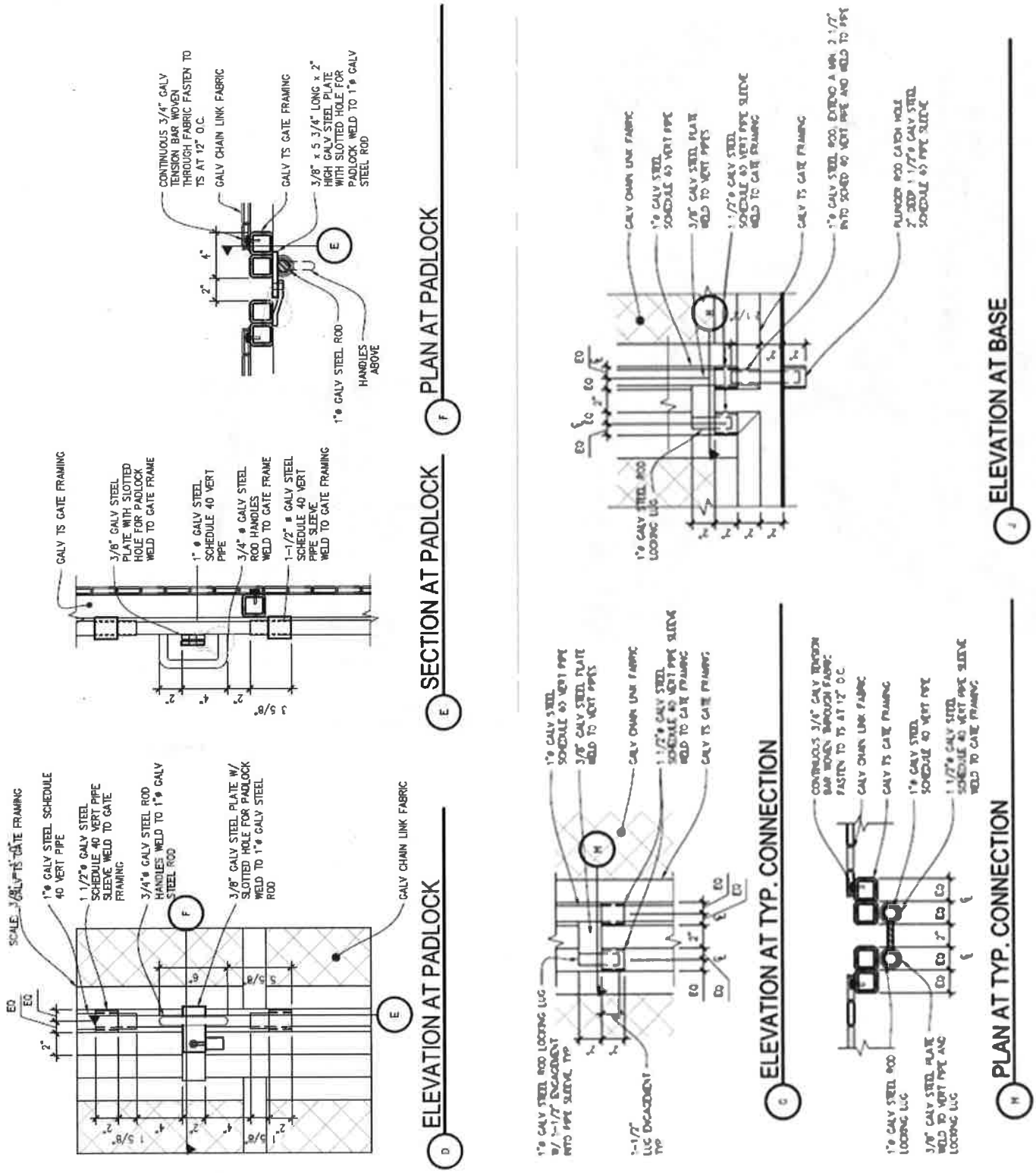

ATTACHMENT # 10
Sample Evacuation Plan

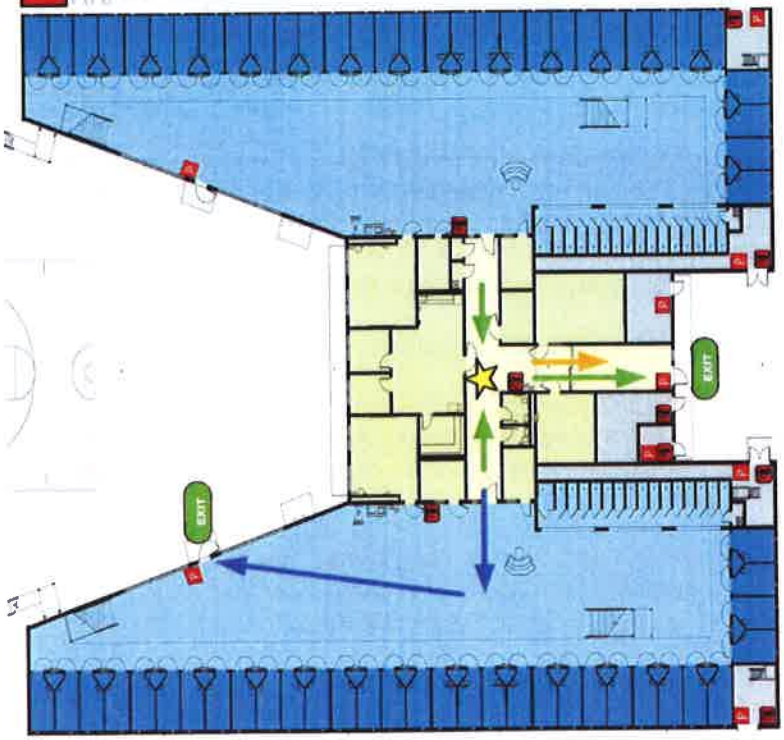

Building 22 Core

Procedures

- ☐ Upon discovery or report of a fire, the following steps should be taken
- ☐ Activate the fire alarm PULL STATION adjacent to the exit door
- ☐ Notify Central Control at 881-6106 or by radio 'CODE 3' the following information should be given
  - A. Your name
  - B. Your location and location of fire
  - C. The extent of the fire
  - D. Door or evacuation route used
- ☐ If feasible, attempt to extinguish fire utilizing hand held extinguisher
- ☐ Evacuate area per posted exit routes to the outside of building.
- ☐ If feasible during evacuation turn off all electrical switches and close all doors
- ☐ Once outside, proceed to the **PRIMARY ASSEMBLY POINT** located out the front door of the building. Assemble in front of building 23 and at least 50 feet from building 22.
- ☐ If for some reason the Primary Assembly Point can not be used the **SECONDARY ASSEMBLY POINT** will be utilized. It will be located through A pod and out the side door. Assemble at the rear of the recreation yard near rear fence and at least 50 feet from the building.
- ☐ Upon completion of evacuation conduct a head count. Make sure all persons are accounted for.
- ☐ DO NOT attempt to reenter the building until the building is cleared by responding staff and the all clear is given

Tennessee Department of Correction		
BCCX	October 2012	Facility Safety Office

ATTACHMENT # 11
TDOC Building & Room Numbering Convention

Inmate housing units will be numbered sequentially beginning at 01 through 99 – single digit numbers will require a leading zero to maintain a two digit building number.

The building component designation is an alpha character, i.e., A, B, C, D, or E.

The floor designation is a numeric character.

Inmate housing quarters will be numbered sequentially beginning at 01 through 99 – beginning at the first space to the left as the user enters through the primary entrance. Single digit numbers will require a leading zero to maintain a two digit building number.

Additional room numbers for mechanical or program spaces will follow the above sequence in a similar pattern, i.e., last cell # is 18, first mechanical or program space # is 19, etc.

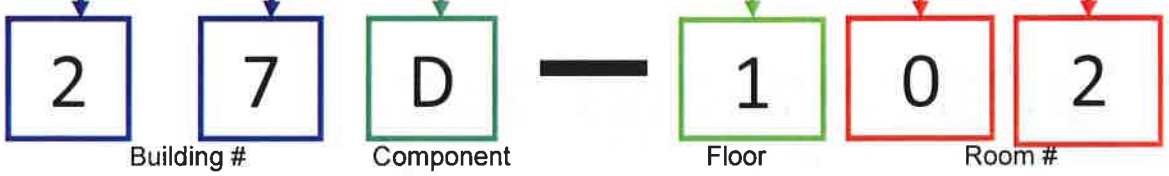

Institutional ancillary and support buildings will be identified sequentially beginning at A through Z in the second character of the building number, the first space in the building number will include a blank as a place holder to maintain a two digit building identification should it become necessary.

The building component designation is an alpha character, i.e., A, B, C, D, or E.

The floor designation is a numeric character.

Building spaces will be numbered sequentially beginning at 01 through 99 – beginning at the first space to the left as the user enters through the primary entrance. Single digit numbers will require a leading zero to maintain a two digit building number.

An exception would be the infirmary or the holding area that will contain components that would dictate strict sequential numbering (as in the living units) in order to facilitate operational procedures.

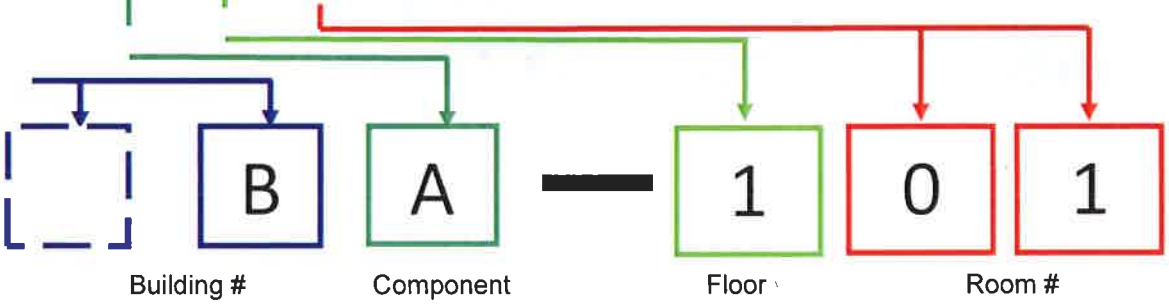

SECTION 01 35 13.16
DETENTION PROJECT PROCEDURES

PART 1 - GENERAL

1.01 SECTION INCLUDES

General administrative, security procedural requirements and restrictions for Contractors regarding access to and use of the Tennessee Department of Correction Project site and surrounding areas; and security procedures for Contractor tools, materials, and individuals.

1.02 DEFINITIONS

A. Lockdown – A condition within the Department of Correction that ALL (except emergency) movement ceases; an institutional count time is the most frequent use.

B. Owner – State of Tennessee, Department of General Services for the Department of Correction.

C. State of Emergency – Event or condition impacting the security of the facility or safety of staff, inmates or Contractors.

D. TDOC – Tennessee Department of Correction.

1.03 SUPERVISION

A. Contractor shall provide on-site supervision of construction personnel at all times.

B. Contractor shall at all times have a minimum of one (1) person at each separate work site or work crew capable of communication in English with the facility staff.

1.04 PROJECT/SITE CONDITIONS/REQUIREMENTS

A. Prior to mobilization of construction personnel to the site, Contractor shall ensure that personnel, subcontractors, material suppliers, etc. review the requirements of this Section.

B. The Contractor shall require that all personnel, subcontractors, material suppliers, etc. who will enter TDOC property certify their awareness of and familiarity with the requirements of this Section during orientation to the institution.

C. The Warden is the chief administrator of the TDOC institution and the Project site. The Warden has full and final supervision over all institution operations and the Contractor usage of the site. The Warden may delegate certain responsibilities held, as presented in this Section, to one or more designees identified by the Warden.

D. The Warden/designee may provide the Contractor's Superintendent with an institutional radio for communication. Superintendent shall turn in radio to designated staff upon leaving the premises each day.

E. The Warden/designee may approve the use of a single cellular telephone by the Contractor’s Superintendent, only.

F. The Contractor shall provide to the Warden primary and alternate emergency contact information of individuals (Superintendent and/or foreman) to be notified during non-working hours if an event impacting the institution has occurred which warrants their notification.

G. Security Procedures Orientation

1. Each individual who enters the site on behalf of the Contractor, including but not limited to, subcontractors and material suppliers, shall have received a Security Procedures Orientation for the Project. The Warden/designee will provide orientation. Prior orientation in the course of another project cannot substitute for orientation for this Project.

2. Contractor shall coordinate scheduling individuals for orientation.

3. Warden will determine duration of the orientation and its agenda.

4. Contractor shall provide an interpreter, if required.

5. The institution will provide ten (10) Security Procedure Orientations at no charge to the Contractor. Each Orientation meeting may accommodate as many employees as requested by the Contractor. Orientations in excess of the ten (10) meetings will be charged to the Contractor at a rate of three hundred dollars ($300.00) per session.

H. Contractor shall not request direction, Project documents clarification, or approval from institution staff, security escorts or other on-site personnel. The Owner's Project Manager is the Owner's designated on-site representative during construction and is the only party authorized to direct changes to the scope, cost or Contract time of the Project.

1.05 SURROUNDING SITE CONDITION SURVEY

A. Prior to commencing the Work, the Contractor and TDOC representatives shall tour the Project site and surrounding areas together to examine and record existing conditions of adjacent buildings, roadways, and other applicable areas. The Contractor shall photograph and videotape, in sufficient detail, the existing interior and/or exterior building conditions and grounds of all areas that will be affected by construction and access routes to substantiate existing conditions that might otherwise be construed as damage caused by the Contractor. Date all material and deliver a copy to the Owner and TDOC within seven (7) days following the Notice to Proceed. This record shall serve as a basis for determination of subsequent damage due to Contractor's operations. Any cracks, sags, or damage to the adjacent buildings and improvements not noted in the original survey, but subsequently discovered, shall be reported to Owner's Representative and TDOC.

B. The Contractor shall be responsible for any construction related damage, required repair and/or replacement to existing facilities or property including landscaping, paving, security systems (including but not limited to, fencing and fiber optics), roads and sidewalks unless it is verified that the damage was a previously existing condition. Any damages shall be repaired or replaced with materials equivalent to the original work and is subject to the satisfaction of the Owner's Representative and TDOC.

C. Photo-documentation of special, secure areas may require special handling and storage. TDOC will identify when these circumstances are present and how the photo-documentation will be handled (Also see Section 1.10 H).

1.06 EMERGENCIES

A. If the Warden declares a state of emergency, Contractor may be:

1. Required to leave premises, or

2. Confined to a specific area for duration of emergency.

B. Emergencies that may impact access to the institution or limit access within the secure perimeter include, but not limited to:

1. Fog, inclement weather or natural disaster;

2. Food, medical, or transportation emergencies;

3. Disturbance, inmate work stoppage, inmate escape, inmate hunger strike or hostage situation; and,

4. Bomb threat, chemical spill, fire, or institution evacuation.

C. At the Warden's discretion and depending on the level of emergency, the Contractor may be permitted to work at the job-site trailer/staging area(s) or other institution areas outside the secure perimeter.

D. Any incident requiring police or ambulance service should be reported to the Warden/designee immediately following the notification of emergency responders.

1.07 ACCESS TO SITE

A. Access is normally restricted to the period from 7:00 AM to 7:00 PM every weekday during daylight hours only. The Warden may vary these hours at their discretion. Contractor shall provide the Warden a minimum of forty-eight (48) hours notice before working on Saturdays, Sundays or State of Tennessee holidays. If the institution is officially closed due to an emergency condition or other State of Tennessee requirement, the Contractor will not be allowed to work.

B. During institution "inmate count times", the Contractor will not be allowed to move construction employees between inmate secure zones within the institution's secure perimeter or be allowed access to the Sallyport/Vehicle Gate area(s).

C. Contractor shall access site through a single point designated by the Warden. Random access to and from the Project site will not be permitted. Fixed times for arrival and departure of most construction forces, as a group, should be established by mutual agreement between Contractor and the Warden. Changes and additions to normal working schedules shall be communicated to the Warden a minimum of forty-eight (48) hours in advance.

D. Sallyport/Vehicle Gate Access Procedures:

1. During the pre-bid/construction conferences the Warden may identify specific windows of time that would be the least disruptive to the institution for the movement of workers and/or materials through the Sallyport/Vehicle Gate in order to best accommodate the Contractor. Additional security staff may be assigned to assist with the processing procedures during the designated times.

2. The Contractor shall provide legibly written inventories of all tools entering the Sallyport/Vehicle Gate. Documentation shall be by storage box and vehicle.

3. The Contractor shall provide all required vehicle information in written form to the Sallyport officer. All vehicles will be searched. This search shall include all compartments, under the hood, and in other areas where contraband is likely to be hidden.

4. Construction workers attempting to enter the Sallyport/Vehicle Gate without an approved background check will not be permitted access to the site.

E. The Warden/designee will endeavor to notify the Contractor as soon as possible if a situation exists which may preclude timely access to or use of the Project site.

1.08 SECURITY

A. Security Officer Escort:

The Warden may establish a Construction Security point of contact to work with the Contractor and provide liaison between the construction Project and the facility. This staff security officer will be provided for normal work hours.

1. Normal Schedule – A block of hours scheduled between the hours of 7:00 AM to 7:00 PM during daylight hours as approved by the Warden. Up to four (4) security officers will be provided for normal work hours. Two (2) additional security officers may be provided (for limited duration) during normal work hours for vehicle escort when concrete placement or other intensive sally port traffic operations take place. The Contractor shall submit a written request to the Warden or designee for use of these additional officers a minimum of forty-eight (48) hours prior to their intended use.

2. Normal Work Hours – Security escorts shall be provided for five (5) eight (8)-hour shifts per work week. Additional escorts and/or overtime hours for security escorts may be provided at the discretion of the Warden. Costs for additional escorts and overtime hours shall be charged to the Contractor by the institution.

3. Extended Schedule – All hours requested by the Contractor and approved by the Warden to extend work during hours of darkness or on weekends or holidays. During extended hours only two (2) security escort officers (one (1) per crew) will be made available. The

Contractor shall submit a written request to the Warden or designee for use of these officers a minimum of forty-eight (48) hours prior to their intended use.

4. The Contractor can purchase a limited quantity of additional security escorts in the following time increments in compliance with the following:

a. The dates and times that additional security escorts are available, and the quantities of escorts that are available are at the sole discretion of the Warden. The requirements of the facility will not be superseded by the needs of the Contractor;

b. Payment(s) for additional escorts shall be made directly to the institution by the Contractor on a monthly basis at the following rates per escort:

4 hours =	$ 95.00
8 hours =	$189.00
10 hours =	$237.00

c. Overtime (more than forty (40) hours/week) shall be charged at one and one-half (1 ½) times the block rates and shall also be the same block minimum time increments.

d. Payments shall be made monthly to the institution. Payments over thirty (30) days past due shall incur interest per the General Conditions.

e. Additional security escorts required for non-conforming Contract corrective work will not be provided at no-cost to the Contractor. The Contractor shall be responsible for all escort costs in blocks of time as per 1.08 4.b. above.

5. Contractor shall endeavor to notify the Warden of non-workdays. Failure to provide notification within eight (8) hours of a scheduled work assignment/work day or failure to fully utilize the staffing scheduled may result in overtime costs incurred by the institution to be charged to the Contractor.

6. The correctional officer(s) assigned as a security escort has specific TDOC responsibilities to include (but not limited to):

a. Accountability and security of civilian workers within the institution;

b. Accountability of tools and equipment introduced into the institution;

c. Security of all vehicles and fuels (escort may hold the keys or install a disabling device to the vehicle);

d. Separation of the inmate general population should workers require access to inmate accessible areas; and,

e. Maintaining communication with Central Control.

7. Security escorts shall not participate in construction activities, receive construction materials or remove construction materials, either demolished or surplused, from the Project site.

B. The Contractor shall restrict the access of all persons entering upon the Owner's property in connection with the Work to the agreed upon access route, procedures and to the actual site of the Work.

C. The Contractor shall restrict activities of employees to authorized areas. Contractor employees shall not enter other institution buildings unless it is directly related to the Work of this Project.

D. The Warden may conduct random vehicle searches on all vehicles entering TDOC property. Institutional entrances are posted with prohibited items, i.e., weapons, drugs, alcohol, cell phones, tobacco products, etc. Vehicle searches may be conducted with the use of detection dogs. If weapons, drugs, ammunition, or alcohol are found in a construction worker's vehicle, the owner operator is subject to arrest by local authorities and may be restricted from return to TDOC property. Persons with valid handgun carry permits are also prohibited from having their weapon on the TDOC property.

E. Individuals, vehicles, and construction facilities are subject to search at discretion of the Warden/designee. Searches of individuals may include strip search at the discretion of the Warden.

F. The Contractor shall, at the direction of the Warden, be required to make available keys for any on-site job trailers, storage boxes, equipment containers, etc. The Warden may require searches of these items or facilities at any time.

G. All institutional areas are subject to video and audio surveillance at the direction and discretion of the Warden.

1.09 IDENTIFICATION OF CONTRACTOR'S PERSONNEL

A. All personnel shall be subject to a fingerprint background check conducted by the institution prior to being permitted to enter the institution. The Contractor/employee shall complete a Contractor Pre-Access Questionnaire form completing all indicated background check information. Additionally, the Contractor/employee will be available to the institution to be fingerprinted as scheduled by the institution. Background check forms provided by the Warden/designee must be completed prior to Contractor's mobilization to the site. Fingerprint background checks will be performed on employees, delivery drivers and vehicle operators employed by the Contractor, subcontractors and vendors. Any consistent driver that frequents the Project site will require a background check. Contractor should assume that background checks will take a minimum of seven (7) business days to complete. The Contractor shall notify the Warden and complete the background check forms for all replacement and/or new employees, drivers, etc. not identified in the initial list of site personnel. Background checks may be repeated on any employee at any time. Any subsequent information, such as a recent arrest, may result in denial of access.

B. A valid driver's license number, social security number, date of birth and/or other similar information is required for a background check. Background information will not be disclosed to or discussed with the Contractor. Per applicable laws and TDOC policy, background information will remain confidential.

C. The Contractor shall identify for the Warden, promptly upon their employ, persons who have been previously convicted of a felony, incarcerated, or who have a family member currently incarcerated at the institution. Warden may require such persons to be excluded from working on the premises.

D. Denial of access decisions by the Warden will be final and non-negotiable.

E. The Contractor shall notify the Warden immediately upon dismissal or arrest of an employee, but no later than forty-eight (48) hours from the time the Contractor is informed. The Warden shall decide if the employee may continue to have access to institutional property.

F. An identification card (or pass) may be provided to each construction worker who enters the secure confines of the institution. Workers will be required to show a valid government issued photo identification card in order for a card to be issued. Identification cards shall be worn in plain sight at all times. If lost or stolen, report to the Warden for issuance of a new card. Identification cards shall be returned to the Warden upon completion of work or termination of employment. The cost of replacement cards/ identification shall be the Contractor's responsibility.

G. Construction Worker Apparel

1. Construction workers may be required to wear appropriate identification and clothing inside correctional facilities, which may consist of or be limited by:

- **a.** Headwear of a specific color,
- **b.** Shirt and/or vest of a specific color,
- **c.** Other appropriate apparel as designated by the Warden/designee, and
- **d.** Wearing of camouflaged clothing is not allowed.

2. Apparel depicting gang colors or symbols, contraband or inappropriate activity is not permitted. (An example would be a shirt or hat advertising beer or drug paraphernalia, etc.)

H. Construction workers shall be required to receive an ultraviolet ink stamp to facilitate processing egress.

1.10 JOB CONDITIONS

A. Items that are not required for performance of Work are not permitted. All unnecessary items must be removed from vehicles so that searches may proceed quickly.

B. The Contractor shall maintain safe, clean and ADA compliant fire exit paths of travel for building occupants, visitors, and staff at all times.

C. Association with inmates

1. Interaction with inmates is not permitted.

2. Trafficking or trading in goods and other items as listed in subparagraph 1.10 D. below with inmates is not permitted.

3. The Department of Correction adheres to a policy of Zero Tolerance regarding workplace relationships with inmates; see TN Code Annotated 41-21-241.

D. Tobacco Products, Alcoholic Beverages, Cell Phones, Weapons, Cash and Drugs

1. All areas within the TDOC site are designated as NO SMOKING/TOBACCO FREE areas. The Contractor shall not allow any workers to use or to have in their possession tobacco products or tobacco related paraphernalia within the secure perimeter of the institution. All tobacco related items must remained locked in the workers vehicle while on TDOC property.

2. Alcoholic beverages, weapons, and illegal drugs are not allowed on TDOC property. Persons caught introducing illegal or banned items onto the grounds of a TDOC institution are subject to confiscation of the disallowed items, removal from the site, termination of site access privileges and prosecution.

3. Individuals requiring prescription medications during the workday shall be required to produce the medication in the original packaging from the pharmacy with the prescription name and dosage (see TCA 39-16-201) and fill out a form, suitable to Warden, identifying them and their medication(s). The Contractor's Superintendent shall maintain a copy of the form(s) on file. Approval from the Warden/designee must be received before the medication(s) are allowed on site. Warden may require verification of prescription(s) / medication(s). Warden may refuse to permit prescription/medications on site. Only enough medication for one (1) day may be brought on site. Contractor's Superintendent shall keep a copy of the form on file. It is highly encouraged, if possible, that medications be taken at a time that allows for medications to be left outside the secure perimeter. Narcotic medications will not be allowed on the secure compound.

E. Meals

1. Workers may be required to leave the institution facilities to obtain meals. On-site meals may be allowed to enter the institution at the Warden's discretion and if in compliance with TDOC and institutional policies. Food service for construction workers is not available at the facility unless so modified by the Warden during the Pre-Bid Conference and noted in a follow-up addendum.

2. No food or beverages will be allowed through the checkpoint. Workers may purchase food and beverages from vending machines in the visitation area.

3. If vending machines are available, they will be identified at the Pre-Construction Conference. Vending Machines are generally cashless. Purchase cards may be purchased from the institution.

F. No cell phones (except as noted above), beepers, or other telecommunication devices as defined by TCA Section 39-16-201 as amended will be allowed through building checkpoints without approval of the Warden or designee.

G. Without the Warden's prior written approval, no computers, laptops, PDA's, cameras, or other similar computer electronic devices will be allowed inside the security perimeters or through building and site checkpoints.

H. Contractor required construction photographs, digital or otherwise, taken inside TDOC facilities or of the Project site and buildings shall become the property of TDOC and shall not be used for purposes other than as progress photos and other than construction related reports without the express written permission of the Warden and the TDOC Director of Facilities, Planning and Construction. Any photographs, digital and print that include inmate faces shall be immediately destroyed and not used or printed for any purpose. These requirements shall include photographs taken or construction photos used by the Contractor's subcontractors, vendors, etc. Use of finished construction photographs, to include web-based use, will not be allowed unless approved in advance by the TDOC Director of Facilities, Planning and Construction.

1.11 TOOLS AND MATERIALS

A. A Class A tool is defined as any instrument that could be utilized:

1. To attempt an escape,

2. As a weapon, and

3. To fabricate other materials into a weapon.

B. Contractor shall make a concerted effort to introduce only necessary Class A tools into the facility, and in the least possible number. Each toolbox and tool pouch entering the facility shall have a pre-written inventory for its contents. TDOC staff will check tool, equipment and material inventories at all egress and exit control points. Lack of tool accountability is the primary cause for delay when processing through control points.

C. Tools shall be kept in a secure (locked) toolbox when not in use and shall be inventoried on a daily basis to insure complete and total accountability. The Warden/designee may conduct an inventory of storage containers at any time as determined necessary.

D. Hand tools shall be kept in Contractor's possession at all times when not properly stored. Tools shall be removed or placed in a locked toolbox, shed, trailer, or similar tool storage area outside the secure perimeter at the end of each workday. While the tools are being used, they shall be kept in view or on person. Broken or non-usable tools are to be disposed of away from institutional property. Any missing tools, devices, cell-phones, radios, etc., are to be reported promptly to the Sallyport Officer and security escorts.

E. Ramset tools may be stored on site; however, "shots" shall be removed daily from the TDOC site and all spent shot accounted for by the Contractor. Special procedures will be developed with the institution concerning cutting pliers, bolt cutters, hacksaws, and welding or cutting equipment.

F. Storage of hand tools within the security perimeter is NOT permitted. Warden/designee will designate an area for tool storage. Contractor shall provide a tool storage container and lock, a tool inventory, and provide a key to the Warden/designee until removal of container. The Warden/designee may conduct an inventory of storage containers at any time as determined necessary. The Warden may determine that a TDOC padlock and key controlled by the escort officer be required. The Contractor must maintain a complete and accurate list of all of the tools. Tools in locked tool storage containers shall be stored and organized in such a manner acceptable to the Warden/designee to facilitate ease of inventory, i.e. shadow boards or other acceptable method of tool storage. If at any time the Contractor fails to maintain acceptable organization of any tool storage container, the Contractor may be required to remove the tool storage container from the site. If tools are removed from the storage container for any reason (maintenance, repair, removal from the site, etc.), the tool inventory list for the specific storage container must be immediately updated to indicate that the tool is no longer part of the inventory.

G. Workers shall not accept anything from an inmate or provide any tools or supplies to an inmate. Inmates are not permitted access to construction documents and related papers. Any theft should be reported immediately.

H. Immediately report lost tools to the Warden/designee. If a tool is lost, the Contractor and all workers will not be allowed to leave the compound until the tool is accounted for or recovered. Example: A declaration that a tool is under a concrete pour or went out with a load of construction debris is NOT acceptable methods of accountability.

I. All ladders shall be removed from inside the secure perimeter on a daily basis.

1. Any ladder not in use within the secure perimeter shall be stored and secured to a fixed object with a chain and padlock. The security escort may ask to control the padlock key.

2. No ladder shall be left unattended at any time within the secure perimeter. Security escorts shall not be utilized to monitor ladder access or use.

3. All portable man-lift equipment shall be secured outside the security perimeter when not in use.

J. Contractor shall be required to submit Material Safety Data Sheets (MSDS) to the Facility Safety Officer (FSO) for any product, chemicals, and materials brought onto TDOC property. Contractor shall review MSDS information and requirements for MSDS data submittal to the institution's Facility Safety Officer prior to the start of Work.

1.12 CONTRACTOR USE OF PREMISES AND PRISON OCCUPANCY

A. Use of the premises by Contractor will be limited to the 'Site/Project Boundaries' as identified in the Contract Documents to include temporary facilities, and reasonable access thereto. Space for staging Work, employee parking and related operations of Contractor and Contractor's employees may be provided, subject to availability. Coordinate use of premises under direction of the Warden.

B. The Contractor is advised that the Project site(s) are or will be active correctional facilities or other prison related areas, and they shall take all necessary precautions to assure the safety of the staff and inmates, State of Tennessee employees, visitors and other contractors day and night. The Contractor shall at all time conduct operations as to insure the least inconvenience and the greatest amount of safety and security for the State's use of other nearby areas by inmates, State of Tennessee employees and the general public. The Contractor acknowledges that there are inherent dangers involved while working at a prison and TDOC will use ordinary care to keep the premises reasonably safe during the Contractor's access to the Work site.

C. The Contractor shall coordinate their work with the institution's routine daily schedule (counts, meals, work call, etc.), and shall schedule and carry out its work such that the normal operations of the facility are given first priority. This applies particularly to noise, utility, and security systems outages and restriction of access. Such construction operations shall frequently be carried on outside of the normal Contractor's working hours, and by overtime, weekend, and holiday work.

D. For renovation projects, if the site is within a secure perimeter of an operational institution, job trailers and storage trailers/units shall be located outside the secured perimeter of the institution facility as directed by the Warden. With the Warden's approval, job trailers may be located within the secure perimeter of the institution if they are enclosed by a separate fence and are capable of being fully locked. The Warden shall approve all fencing details.

E. Provide and erect before any work begins, and maintain during the progress of the Work, all necessary dust partitions, protective and security barriers, warning signals, exit and directional signage and lighting. The extent of this work and details of construction shall be in accordance with the requirements of all Federal, State, and local ordinances, codes and requirements; and shall meet the approval of all authorities having jurisdiction and the Warden.

F. Provide isolation of Project work areas from occupied area(s) with barricades, plastic sheeting, plywood security walls, or temporary dust partition walls. The Contractor shall provide and maintain necessary barriers and protective devices to control access to the Work areas and to contain all work and storage areas such that adjoining building spaces, including walkways, corridors, stairs and doorways, remain accessible for the institution's use but not accessible to the inmate population.

G. Control traffic to/from the Work area(s) and occupied area(s) to prevent disruptions to the normal facility operation.

H. Modify HVAC equipment to pressurize occupied non-work area(s) to prevent the migration of offensive materials and odors from Work area(s). Blank-off outside air intakes and/or return air grilles to prevent distribution of offensive materials and odors into occupied non-work areas. Contractor shall confirm design CFM for all spaces affected by modifications and adjustments made to existing systems, and re-balance HVAC system(s) for all systems modified during construction.

I. The use of any “air hammers” or other impact equipment that will cause excessive noise or vibration shall be strictly prohibited during normal operational hours. Except for special situations where prior approval from the Warden/designee has been granted, the use of power impact tools for demolition is strictly prohibited inside occupied buildings.

J. The use of any gasoline/kerosene/diesel-powered equipment inside occupied buildings shall be strictly prohibited, unless authorized by the Warden/designee.

K. Exercise the utmost care to protect existing security systems, equipment, furniture, building finishes, site features and landscaping etc. from damage. Contractor shall report damage immediately, but no later than the end of the workday, to the Warden. Repair of security system cabling and cameras, lighting systems, fiber optic cabling and other critical systems shall be made immediately, and the costs of temporary replacement systems and TDOC labor, as needed, shall be the responsibility of the Contractor.

L. Any portion of the existing buildings, furniture, equipment, etc. or existing utility and security services not included as part of the Work of this Contract or any portion of the Work damaged because of failure to provide the protection required, shall be removed and replaced with new materials and construction at the Contractor's expense. The Work shall be accomplished subject to the Warden’s approval.

M. If the Contractor makes arrangements for closure of a corridor, hallway, egress routes, sidewalks, streets, etc. which provides access to other parts of the institution’s, building or office areas; the Contractor shall make provisions for alternative access to such other nearby areas. These proposed arrangements shall be acceptable to all authorities having jurisdiction and the Warden.

N. Institutional staff shall not receive deliveries for the Contractor or for the Project. The Contractor shall receive all Project related materials at their job site office or off-site, as required.

O. The Contractor, subcontractors, or their employees shall not use TDOC equipment or tools.

1.13 TRANSPORTATION FACILITIES

A. Provide adequate protection for lawns, curbs, and sidewalks over which trucks and equipment pass to reach the Project site(s). Repair and replace all damaged lawns, curbs, sidewalks, and roadways at no cost to the Owner.

B. Contractor shall provide flagmen and traffic control management while using areas of the Project site or outside the Project limits. The Contractor shall be responsible for maintaining pedestrian and vehicular traffic on local roads adjacent to and directly leading to and/or through the areas that are affected by the construction Project. Prior to changing any traffic patterns, the Contractor shall submit a Maintenance-of-Traffic Plan identifying how the vehicular and pedestrian traffic flows will be modified, subject to the review and approval by the Warden, TDOC and authorities having jurisdiction. The Contractor shall provide proper signage and personnel to identify and manage temporary roadway relocations or locations where traffic may be impacted.

C. Contractor’s Vehicles

1. Personal vehicles for Contractor’s employees shall be parked outside the secure perimeter of the facility or to an off-site area as designated by the Warden. Parking permits may be required for all construction personnel and business vehicles. For any vehicles that are to be left overnight, the license number and numbers of vehicles must

be reported to the Warden/designee on a daily basis. All vehicles left overnight shall be made inoperable.

2. Do not permit contractor related vehicles to park on any street or other area of the State's property except in the area(s) so designated by the Warden/designee.

3. Vehicles and/or equipment, which cannot be taken outside the perimeter for refueling, will be refueled using gas cans. Once the refueling is completed the gas cans are to be removed from inside the security perimeter. No fuel tanks are permitted to be stored inside the security perimeter.

4. Work trucks, with logos and company names clearly visible, necessary to the progress of the Project (as determined by the Warden) will be permitted on-site (within the secured perimeter) as needed if they are capable of being fully locked, including fuel tanks and tool compartments.

5. Vehicles entering the security perimeter site will be required to await an escort and remain in the company of the escort.

6. All vehicles shall be locked at all times. Any vehicle determined by the Warden to be a security threat or represents what could be a threat will not be allowed on state property.

7. All drivers shall have a valid driver's license. Vehicle drivers without a valid driver's license will not be granted access to TDOC property and may be banned from the site and subject to arrest by local authorities.

D. Construction Equipment:

1. "Street worthy" vehicles such as automobiles or trucks may not be stored within the secure perimeter during extended hours. Material delivery vehicles shall enter the compound, be unloaded, and depart the compound immediately after completion of the delivery. Tractors such as farm tractors and flat bed wagons are preferred for hauling materials from the staging area to the Work area inside the secure perimeter.

2. Pending Warden's approval, during normal work hours, the Contractor's Superintendent may park one "street worthy" truck inside the security perimeter near the Work area. The vehicle shall be locked and the ignition key held by the security officer during the time the vehicle is parked. The vehicle shall have a locking gas cap.

1.14 WORK SEQUENCE

A. The Work shall be executed to minimize disruption of activities at the Project site(s) or buildings. Contractor shall submit a written and graphic plan for staging of demolition work, staging of Work, layout and location of material staging areas, location of dust prevention partitions, security and any required system outages within seven (7) calendar days from the Notice to Proceed date. The Plan shall be reviewed, revised as required and approved prior to initiation of Work at site.

B. The Warden shall be notified in writing seventy-two (72) hours prior to any utility, communication, electronic security device(s) and systems, or HVAC system cut-off. The required notification of a cut-off or interruptions shall include, but not be limited to, service(s) to be cut-off, the expected impact on the facility, the date and time of the cut-off and the anticipated duration of the cut-off. Notification shall pertain to all or any portion of the Project site(s), institution buildings, adjacent State of Tennessee sites, or private properties required by the progress of the Work. The Warden shall have final approval of the exact time for and duration of any proposed shutdown.

1. Utility shut-downs or cut-offs impacting Central Control, medical and kitchen areas shall required a minimum of five (5) workdays notice and approval of the Warden.

2. The Facility Safety Officer (FSO) and Facility Manager shall be notified to inspect and to determine that normal fire protection and utilities have been restored.

3. Excessive scheduling of utility shutdowns or repeated requests to schedule and subsequent cancellation or re-scheduling of shut downs may be subject to back-charges to the Contractor by the institution.

4. Contractor shall not close-up, conceal or seal above ceiling spaces, utility chases or wall cavities without inspection and sign-off by the Warden or their designee. Provide the Warden a minimum of twenty-four (24)-hour notice of all required inspections. Failure to receive approval prior to concealment shall require the Contractor to provide adequate, as defined by the Warden, "open space" to inspect the concealed area before further work can proceed. Costs to repair/patch "open space" inspection holes shall be the Contractor's responsibility.

1.15 JOB SIGNS AND PUBLICITY RELEASES

A. Advertising Signage: The use or installation of Contractor or subcontractor advertising signage is prohibited. Do not display such advertising or job signs except as may be required for identification and deliveries.

B. Owner-Furnished Warning Signs: Whenever required by the TDOC On-site Representative, TDOC furnished warning signs shall be posted in areas as directed.

C. The Contractor, subcontractors, vendors, material suppliers, etc. shall not release any information, story, photograph, plan or drawing relating information about the Project to anyone, including the press or other public communications mediums.

1.16 CARE OF EXISTING FACILITIES

A. The Contractor shall be responsible for repair or replacement of existing facilities including any landscaping, paving, security and fencing systems, roads and sidewalks damaged as a result of the performance of the Work. Any facilities or finishes damaged shall be repaired or replaced with materials and workmanship equivalent to that employed in executing the original work and to the satisfaction of the TDOC and Owner's Representative.

B. The Contractor shall take care not to overload the existing structure by storing material, erecting shoring, placing equipment or other materials upon or against the building.

1.17 SPECIAL PAYMENT APPLICATION REQUIREMENTS

Refer to Section 01 29 73 – Schedule of Values, sub-paragraph 1.02 D; the Contractor's payment application's Schedule of Valves shall to sub-divided and sub-totaled for each individual or distinct Project work area or building as necessary for TDOC accounting or grant reporting.

SECTION END

SECTION 01 35 13.30
DETENTION PROJECT PROCEDURES
For Work Outside the Secure Perimeter

PART 1 - GENERAL

1.01 SECTION INCLUDES

General administrative, security procedural requirements and restrictions for Contractors regarding access to and use of the Tennessee Department of Correction Project site and surrounding areas; and security procedures for Contractor tools, materials, and individuals for projects that do not require entry inside the secure perimeter of the institution or have only limited impact on institutional operations.

1.02 DEFINITIONS

A. Lockdown – A condition within the Department of Correction that ALL (except emergency) movement ceases; an institutional count time is the most frequent use.

B. Owner – State of Tennessee, Department of General Services for the Department of Correction.

C. State of Emergency – Event or condition impacting the security of the facility or safety of staff, inmates or Contractors.

D. TDOC – Tennessee Department of Correction.

1.03 SUPERVISION

A. Contractor shall provide on-site supervision of construction personnel at all times.

B. Contractor shall at all times have a minimum of one (1) person at each separate work site or work crew capable of communication in English with the facility staff.

1.04 PROJECT/SITE CONDITIONS/REQUIREMENTS

A. Prior to mobilization of construction personnel to the site, Contractor shall ensure that personnel, subcontractors, material suppliers, etc. review the requirements of this Section.

B. The Contractor shall require that all personnel, subcontractors, material suppliers, etc. who will enter TDOC property certify their awareness of and familiarity with the requirements of this Section during orientation to the institution.

C. The Warden is the chief administrator of the TDOC institution and the Project site. The Warden has full and final supervision over all institution operations and the Contractor usage of the site. The Warden may delegate certain responsibilities held, as presented in this Section, to one or more designees identified by the Warden.

D. The Warden/designee may provide the Contractor's Superintendent with an institutional radio for communication. Superintendent shall turn in radio to designated staff upon leaving the premises each day.

E. The Warden/designee may approve the use of a single cellular telephone by the Contractor's Superintendent, only.

F. The Contractor shall provide to the Warden primary and alternate emergency contact information of individuals (Superintendent and/or foreman) to be notified during non-working hours if an event impacting the institution has occurred which warrants their notification.

G. Security Procedures Orientation

1. Each individual who enters the site on behalf of the Contractor, including but not limited to, subcontractors and material suppliers may, at the Warden's discretion, receive a Security Procedures Orientation for the Project. The Warden/designee will provide orientation. Prior orientation in the course of another project cannot substitute for orientation for this Project.

2. Contractor shall coordinate scheduling individuals for orientation.

3. Warden will determine duration of the orientation and its agenda.

4. Contractor shall provide an interpreter, if required.

5. The institution will provide ten (10) Security Procedure Orientations at no charge to the Contractor. Each Orientation meeting may accommodate as many employees as requested by the Contractor. Orientations in excess of the ten (10) meetings will be charged to the Contractor at a rate of three hundred dollars ($300.00) per session.

H. Contractor shall not request direction, Project documents clarification, or approval from institution staff, security escorts or other on-site personnel. The Owner's Project Manager is the Owner's designated on-site representative during construction and is the only party authorized to direct changes to the scope, cost or Contract time of the Project.

1.05 SURROUNDING SITE CONDITION SURVEY

A. Prior to commencing the Work, the Contractor and TDOC representatives shall tour the Project site and surrounding areas together to examine and record existing conditions of adjacent buildings, roadways, and other applicable areas. The Contractor shall photograph and videotape, in sufficient detail, the existing interior and/or exterior building conditions and grounds of all areas that will be affected by construction and access routes to substantiate existing conditions that might otherwise be construed as damage caused by the Contractor. Date all material and deliver a copy to the Owner and TDOC within seven (7) days following the Notice to Proceed. This record shall serve as a basis for determination of subsequent damage due to Contractor's operations. Any cracks, sags, or damage to the adjacent buildings and improvements not noted in the original survey, but subsequently discovered, shall be reported to Owner's Representative and TDOC.

B. The Contractor shall be responsible for any construction related damage, required repair and/or replacement to existing facilities or property including landscaping, paving, security systems (including but not limited to, fencing and fiber optics), roads and sidewalks unless it is verified that the damage was a previously existing condition. Any damages shall be repaired or replaced with materials equivalent to the original work and is subject to the satisfaction of the Owner's Representative and TDOC.

C. Photo-documentation of special, secure areas may require special handling and storage. TDOC will identify when these circumstances are present and how the photo-documentation will be handled (Also see Section 1.10 H).

1.06 EMERGENCIES

A. If the Warden declares a state of emergency, Contractor may be:

1. Required to leave premises, or

2. Confined to a specific area for duration of emergency.

B. Emergencies that may impact access to the institution include, but not limited to:

1. Fog, inclement weather or natural disaster;

2. Food, medical, or transportation emergencies;

3. Disturbance, inmate work stoppage, inmate escape, inmate hunger strike or hostage situation; and,

4. Bomb threat, chemical spill, fire, or institution evacuation.

C. At the Warden's discretion and depending on the level of emergency, the Contractor may be permitted to work at the job-site trailer/staging area(s) or other institution areas outside the secure perimeter.

D. Any incident requiring police or ambulance service should be reported to the Warden/designee immediately following the notification of emergency responders.

1.07 ACCESS TO SITE

A. Access is normally restricted to the period from 7:00 AM to 7:00 PM every weekday during daylight hours only. The Warden may vary these hours at their discretion. Contractor shall provide the Warden a minimum of forty-eight (48) hours notice before working on Saturdays, Sundays or State of Tennessee holidays. If the institution is officially closed due to an emergency condition or other State of Tennessee requirement, the Contractor will not be allowed to work.

B. Contractor shall access site through a single point designated by the Warden. Random access to and from the Project site will not be permitted. Fixed times for arrival and departure of most construction forces, as a group, should be established by mutual agreement between Contractor and the Warden. Changes and additions to normal working schedules shall be communicated to the Warden a minimum of forty-eight (48) hours in advance.

C. The Warden/designee will endeavor to notify the Contractor as soon as possible if a situation exists which may preclude timely access to or use of the Project site.

1.08 SECURITY

A. Security Officer Escort:

The Warden may establish a Construction Security point of contact to work with the Contractor and provide liaison between the construction Project and the facility. This staff security officer will be provided for normal work hours.

1. Normal Schedule – A block of hours scheduled between the hours of 7:00 AM to 7:00 PM during daylight hours as approved by the Warden.

2. Normal Work Hours – Security escorts shall be provided for five (5) eight (8)-hour shifts per work week. Additional escorts and/or overtime hours for security escorts may be provided at the discretion of the Warden. Costs for additional escorts and overtime hours shall be charged to the Contractor by the institution.

3. Extended Schedule – All hours requested by the Contractor and approved by the Warden to extend work during hours of darkness or on weekends or holidays. The Contractor shall submit a written request to the Warden or designee for use of these officers a minimum of forty-eight (48) hours prior to their intended use.

4. The Contractor can purchase a limited quantity of additional security escorts in the following time increments in compliance with the following:

a. The dates and times that additional security escorts are available, and the quantities of escorts that are available are at the sole discretion of the Warden. The requirements of the facility will not be superseded by the needs of the Contractor;

b. Payment(s) for additional escorts shall be made directly to the institution by the Contractor on a monthly basis at the following rates per escort:

4 hours =	$ 95.00
8 hours =	$189.00
10 hours =	$237.00

c. Overtime (more than forty (40) hours/week) shall be charged at one and one-half (1 ½) times the block rates and shall also be the same block minimum time increments.

d. Payments shall be made monthly to the institution. Payments over thirty (30) days past due shall incur interest per the General Conditions.

e. Additional security escorts required for non-conforming Contract corrective work will not be provided at no-cost to the Contractor. The Contractor shall be responsible for all escort costs in blocks of time as per 1.08 4.b. above.

5. Contractor shall endeavor to notify the Warden of non-workdays.

6. The correctional officer assigned as a security escort has specific TDOC responsibilities to include (but not limited to):

a. Security of civilian workers;

b. Periodic checks of tools and equipment introduced on to TDOC property;

c. Monitoring the security of all vehicles and fuels;

d. Separation of the inmate general population should workers require access to inmate work areas; and,

e. Maintaining communication with Central Control.

7. Security escorts shall not participate in construction activities, receive construction materials or remove construction materials, either demolished or surplused, from the Project site.

B. The Contractor shall restrict the access of all persons entering upon the Owner's property in connection with the Work to the agreed upon access route, procedures and to the actual site of the Work.

C. The Contractor shall restrict activities of employees to authorized areas. Contractor employees shall not enter other institution buildings unless it is directly related to the Work of this Project.

D. The Warden may conduct random vehicle searches on all vehicles entering TDOC property. Institutional entrances are posted with prohibited items, i.e., weapons, drugs, alcohol, cell phones, tobacco products, etc. Vehicle searches may be conducted with the use of detection dogs. If weapons, drugs, ammunition, or alcohol are found in a construction worker's vehicle, the owner operator is subject to arrest by local authorities and may be restricted from return to TDOC property. Persons with valid handgun carry permits are also prohibited from having their weapon on the TDOC property.

E. Individuals, vehicles, and construction facilities are subject to search at discretion of the Warden/designee. Searches of individuals may include strip search at the discretion of the Warden.

F. The Contractor shall, at the direction of the Warden, be required to make available keys for any on-site job trailers, storage boxes, equipment containers, etc. The Warden may require searches of these items or facilities at any time.

G. All institutional areas are subject to video and audio surveillance at the direction and discretion of the Warden.

1.09 IDENTIFICATION OF CONTRACTOR'S PERSONNEL

A. All personnel shall be subject to a fingerprint background check conducted by the institution prior to being permitted to enter the institution. If requested by the Warden, the Contractor/employee shall complete a Contractor Pre-Access Questionnaire form completing all indicated background check information. Additionally, the Contractor/employee will be available to the institution to be fingerprinted as scheduled by the institution. Background check forms provided by the Warden/designee must be completed prior to Contractor's mobilization to the site. Fingerprint background checks will be performed on employees, delivery drivers and vehicle operators employed by the Contractor, subcontractors and vendors. Any consistent driver that frequents the Project site will require a background check. Contractor should assume that background checks will take a minimum of seven (7) business days to complete. The Contractor shall notify the Warden and complete the background check forms for all replacement and/or new employees, drivers, etc. not identified in the initial list of site personnel. Background checks may be repeated on any employee at any time. Any subsequent information, such as a recent arrest, may result in denial of access.

B. A valid driver's license number, social security number, date of birth and/or other similar information is required for a background check. Background information will not be disclosed to or discussed with the Contractor. Per applicable laws and TDOC policy, background information will remain confidential.

C. The Contractor shall identify for the Warden, promptly upon their employ, persons who have been previously convicted of a felony, incarcerated, or who have a family member currently incarcerated at the institution. Warden may require such persons to be excluded from working on the premises.

D. Denial of access decisions by the Warden will be final and non-negotiable.

E. The Contractor shall notify the Warden immediately upon dismissal or arrest of an employee, but no later than forty-eight (48) hours from the time the Contractor is informed. The Warden shall decide if the employee may continue to have access to institutional property.

F. An identification card (or pass) may be provided to each construction worker who enters the secure confines of the institution. Workers will be required to show a valid government issued photo identification card in order for a card to be issued. Identification cards shall be worn in plain sight at all times. If lost or stolen, report to the Warden for issuance of a new card. Identification cards shall be returned to the Warden upon completion of work or termination of employment. The cost of replacement cards/ identification shall be the Contractor's responsibility.

G. Construction Worker Apparel

1. Construction workers may be required to wear appropriate identification and clothing inside correctional facilities, which may consist of or be limited by:

a. Headwear of a specific color,

b. Shirt and/or vest of a specific color,

c. Other appropriate apparel as designated by the Warden/designee, and

d. Wearing of camouflaged clothing is not allowed.

2. Apparel depicting gang colors or symbols, contraband or inappropriate activity is not permitted. (An example would be a shirt or hat advertising beer or drug paraphernalia, etc.)

H. Construction workers shall be required to receive an ultraviolet ink stamp to facilitate processing egress.

1.10 JOB CONDITIONS

A. Items that are not required for performance of Work are not permitted. All unnecessary items must be removed from vehicles so that searches may proceed quickly.

B. The Contractor shall maintain safe, clean and ADA compliant fire exit paths of travel for building occupants, visitors, and staff at all times.

C. Association with inmates

1. Interaction with inmates is not permitted.

2. Trafficking or trading in goods and other items as listed in subparagraph 1.10 D. below with inmates is not permitted.

3. The Department of Correction adheres to a policy of Zero Tolerance regarding workplace relationships with inmates; see TN Code Annotated 41-21-241.

D. Tobacco Products, Alcoholic Beverages, Cell Phones, Weapons, Cash and Drugs

1. All areas within the TDOC site are designated as NO SMOKING/TOBACCO FREE areas. The Contractor shall not allow any workers to use or to have in their possession tobacco products or tobacco related paraphernalia within the secure perimeter of the institution. All tobacco related items must remained locked in the workers vehicle while on TDOC property.

2. Alcoholic beverages, weapons, and illegal drugs are not allowed on TDOC property. Persons caught introducing illegal or banned items onto the grounds of a TDOC institution are subject to confiscation of the disallowed items, removal from the site, termination of site access privileges and prosecution.

3. Individuals requiring prescription medications during the workday shall be required to produce the medication in the original packaging from the pharmacy with the prescription name and dosage (see TCA 39-16-201) and fill out a form, suitable to Warden, identifying them and their medication(s). The Contractor's Superintendent shall maintain a copy of the form(s) on file. Approval from the Warden/designee must be received before the medication(s) are allowed on site. Warden may require verification of prescription(s) / medication(s). Warden may refuse to permit prescription/medications on site. Only enough medication for one (1) day may be brought on site. It is highly encouraged, if possible, that medications be taken at a time that allows for medications to be left outside the secure perimeter. Narcotic medications will not be allowed on the secure compound.

4. The amount of cash the Contractor's employees may carry on TDOC property shall be limited at the sole discretion of the Warden. Maximum cash amounts per individual will be set at the Pre-Construction Meeting.

E. No cell phones (except as noted above), beepers, or other telecommunication devices as defined by TCA Section 39-16-201 as amended will be allowed on site without approval of the Warden or designee.

F. Without the Warden's prior written approval, no computers, laptops, PDA's, cameras, or other similar computer electronic devices will be allowed on site..

G. Contractor required construction photographs, digital or otherwise, taken inside TDOC facilities or of the Project site and buildings shall become the property of TDOC and shall not be used for purposes other than as progress photos and other than construction related reports without the express written permission of the Warden and the TDOC Director of Facilities, Planning and Construction. Any photographs, digital and print that include inmate faces shall be immediately destroyed and not used or printed for any purpose. These requirements shall include photographs taken or construction photos used by the Contractor's subcontractors, vendors, etc. Use of finished construction photographs, to include web-based use, will not be allowed unless approved in advance by the TDOC Director of Facilities, Planning and Construction.

1.11 TOOLS AND MATERIALS

A. A Class A tool is defined as any instrument that could be utilized:

1. To attempt an escape,

2. As a weapon, and

3. To fabricate other materials into a weapon.

B. Contractor shall make a concerted effort to introduce only necessary Class A tools onto TDOC property, and in the least possible number.

C. Hand tools shall be kept in Contractor's possession at all times when not properly stored. Tools shall be removed or placed in a locked toolbox, shed, trailer, or similar tool storage area outside the secure perimeter at the end of each workday. Ramset tools may be stored on site; however, "shots" shall be removed daily from the TDOC site and all spent shot accounted for by the Contractor.

D. Storage of hand tools on site will not be permitted unless such tools are securely stored in a manner acceptable to the Warden. Warden/designee will designate an area for tool storage. Contractor shall provide a tool storage container and lock, a tool inventory; provide a key to the Warden/designee until removal of container. An inventory of storage containers may be conducted at any time as determined necessary by the Warden/designee.

E. Workers shall not accept anything from an inmate or provide any tools or supplies to an inmate. Inmates are not permitted access to construction documents and related papers. Any theft should be reported immediately.

F. Immediately report lost tools to the Warden/designee. If a tool is lost, the Contractor and all workers will not be allowed to leave the compound until the tool is accounted for or recovered.

Example: A declaration that a tool is under a concrete pour or went out with a load of construction debris is NOT acceptable methods of accountability.

G. All ladders shall be stored and secured to a fixed object with a chain and padlock when not in use. Security staff may ask to control the padlock key.

H. Contractor shall be required to submit Material Safety Data Sheets (MSDS) to the Facility Safety Officer (FSO) for any product, chemicals, and materials brought onto TDOC property. Contractor shall review MSDS information and requirements for MSDS data submittal to the institution's Facility Safety Officer prior to the start of Work.

1.12 CONTRACTOR USE OF PREMISES AND PRISON OCCUPANCY

A. Use of the premises by Contractor will be limited to the 'Site/Project Boundaries' as identified in the Contract Documents to include temporary facilities, and reasonable access thereto. Space for staging Work, employee parking and related operations of Contractor and Contractor's employees may be provided, subject to availability. Coordinate use of premises under direction of the Warden.

B. The Contractor is advised that the Project site(s) are or will be active correctional facilities or other prison related areas, and they shall take all necessary precautions to assure the safety of the staff and inmates, State of Tennessee employees, visitors and other contractors day and night. The Contractor shall at all time conduct operations as to insure the least inconvenience and the greatest amount of safety and security for the State's use of other nearby areas by inmates, State of Tennessee employees and the general public. The Contractor acknowledges that there are inherent dangers involved while working at a prison and TDOC will use ordinary care to keep the premises reasonably safe during the Contractor's access to the Work site.

C. The Contractor shall schedule and carry out its work such that the normal operations of the facility are given first priority. This applies particularly to noise, utility, and security systems outages and restriction of access.

D. Provide and erect before any work begins, and maintain during the progress of the Work, all necessary dust partitions, protective and security barriers, warning signals, exit and directional signage and lighting. The extent of this work and details of construction shall be in accordance with the requirements of all Federal, State, and local ordinances, codes and requirements; and shall meet the approval of all authorities having jurisdiction and the Warden.

E. Provide isolation of Project work areas from occupied area(s) with barricades, plastic sheeting, plywood security walls, or temporary dust partition walls. The Contractor shall provide and maintain necessary barriers and protective devices to control access to the Work areas and to contain all work and storage areas such that adjoining building spaces, including walkways, corridors, stairs and doorways, remain accessible for the institution's use but not accessible to the inmate population.

F. Control traffic to/from the Work area(s) and occupied area(s) to prevent disruptions to the normal facility operation.

G. Modify HVAC equipment to pressurize occupied non-work area(s) to prevent the migration of offensive materials and odors from Work area(s). Blank-off outside air intakes and/or return air grilles to prevent distribution of offensive materials and odors into occupied non-work areas. Contractor shall confirm design CFM for all spaces affected by modifications and adjustments made to existing systems, and re-balance HVAC system(s) for all systems modified during construction.

H. The use of any "air hammers" or other impact equipment that will cause excessive noise or vibration shall be strictly prohibited during normal operational hours. Except for special situations where prior approval from the Warden/designee has been granted, the use of power impact tools for demolition is strictly prohibited inside occupied buildings.

I. The use of any gasoline/kerosene/diesel-powered equipment inside occupied buildings shall be strictly prohibited, unless authorized by the Warden/designee.

J. Exercise the utmost care to protect existing security systems, equipment, furniture, building finishes, site features and landscaping etc. from damage. Contractor shall report damage immediately, but no later than the end of the workday, to the Warden. Repair of security system cabling and cameras, lighting systems, fiber optic cabling and other critical systems shall be made immediately, and the costs of temporary replacement systems and TDOC labor, as needed, shall be the responsibility of the Contractor.

K. Any portion of the existing buildings, furniture, equipment, etc. or existing utility and security services not included as part of the Work of this Contract or any portion of the Work damaged because of failure to provide the protection required, shall be removed and replaced with new materials and construction at the Contractor's expense. The Work shall be accomplished subject to the Warden's approval.

L. If the Contractor makes arrangements for closure of a corridor, hallway, egress routes, sidewalks, streets, etc. which provides access to other parts of the institution's, building or office areas; the Contractor shall make provisions for alternative access to such other nearby areas. These proposed arrangements shall be acceptable to all authorities having jurisdiction and the Warden.

M. Institutional staff shall not receive deliveries for the Contractor or for the Project. The Contractor shall receive all Project related materials at their job site office or off-site, as required.

N. The Contractor, subcontractors, or their employees shall not use TDOC equipment or tools.

1.13 TRANSPORTATION FACILITIES

A. Provide adequate protection for lawns, curbs, and sidewalks over which trucks and equipment pass to reach the Project site(s). Repair and replace all damaged lawns, curbs, sidewalks, and roadways at no cost to the Owner.

B. Contractor shall provide flagmen and traffic control management while using areas of the Project site or outside the Project limits. The Contractor shall be responsible for maintaining pedestrian and vehicular traffic on local roads adjacent to and directly leading to and/or through the areas that are affected by the construction Project. Prior to changing any traffic patterns, the Contractor shall submit a Maintenance-of-Traffic Plan identifying how the vehicular and pedestrian traffic flows will be modified, subject to the review and approval by the Warden, TDOC and authorities having jurisdiction. The Contractor shall provide proper signage and personnel to identify and manage temporary roadway relocations or locations where traffic may be impacted.

C. Contractor's Vehicles

1. Personal vehicles for Contractor's employees shall be parked outside the secure perimeter of the facility or to an off-site area as designated by the Warden. Parking permits may be required for all construction personnel and business vehicles. For any vehicles that are to be left overnight, the license number and numbers of vehicles must be reported to the Warden/designee on a daily basis. All vehicles left overnight shall be made inoperable.

2. Do not permit contractor related vehicles to park on any street or other area of the State's property except in the area(s) so designated by the Warden/designee.

3. Work trucks, with logos and company names clearly visible, necessary to the progress of the Project (as determined by the Warden) will be permitted on-site as needed if they are capable of being fully locked, including fuel tanks and tool compartments.

4. Vehicles entering the security perimeter site will be required to await an escort and remain in the company of the escort.

5. All vehicles shall be locked at all times. Any vehicle determined by the Warden to be a security threat or represents what could be a threat will not be allowed on state property.

6. All drivers shall have a valid driver's license. Vehicle drivers without a valid driver's license will not be granted access to TDOC property and may be banned from the site and subject to arrest by local authorities.

1.14 WORK SEQUENCE

A. The Work shall be executed to minimize disruption of activities at the Project site(s) or buildings. Contractor shall submit a written and graphic plan for staging of demolition work, staging of Work, layout and location of material staging areas, location of dust prevention partitions, security and any required system outages within seven (7) calendar days from the Notice to Proceed date. The Plan shall be reviewed, revised as required and approved prior to initiation of Work at site.

B. The Warden shall be notified in writing seventy-two (72) hours prior to any utility, communication, electronic security device(s) and systems, or HVAC system cut-off. The required notification of a cut-off or interruptions shall include, but not be limited to, service(s) to be cut-off, the expected impact on the facility, the date and time of the cut-off and the anticipated duration of the cut-off. Notification shall pertain to all or any portion of the Project site(s), institution buildings, adjacent State of Tennessee sites, or private properties required by the progress of the Work. The Warden shall have final approval of the exact time for and duration of any proposed shutdown.

1. Utility shut-downs or cut-offs impacting Central Control, medical and kitchen areas shall required a minimum of five (5) workdays notice and approval of the Warden.

2. The Facility Safety Officer (FSO) and Facility Manager shall be notified to inspect and to determine that normal fire protection and utilities have been restored.

3. Excessive scheduling of utility shutdowns or repeated requests to schedule and subsequent cancellation or re-scheduling of shut downs may be subject to back-charges to the Contractor by the institution.

4. Contractor shall not close-up, conceal or seal above ceiling spaces, utility chases or wall cavities without inspection and sign-off by the Warden or their designee. Provide the Warden a minimum of twenty-four (24)-hour notice of all required inspections. Failure to receive approval prior to concealment shall require the Contractor to provide adequate, as defined by the Warden, “open space” to inspect the concealed area before further work can proceed. Costs to repair/patch “open space” inspection holes shall be the Contractor’s responsibility.

1.15 JOB SIGNS AND PUBLICITY RELEASES

A. Advertising Signage: The use or installation of Contractor or subcontractor advertising signage is prohibited. Do not display such advertising or job signs except as may be required for identification and deliveries.

B. Owner-Furnished Warning Signs: Whenever required by the TDOC On-site Representative, TDOC furnished warning signs shall be posted as directed.

C. The Contractor, subcontractors, vendors, material suppliers, etc. shall not release any information, story, photograph, plan or drawing relating information about the Project to anyone, including the press or other public communications mediums.

1.16 CARE OF EXISTING FACILITIES

A. The Contractor shall be responsible for repair or replacement of existing facilities including any landscaping, paving, security and fencing systems, roads and sidewalks damaged as a result of the performance of the Work. Any facilities or finishes damaged shall be repaired or replaced with materials and workmanship equivalent to that employed in executing the original work and to the satisfaction of TDOC and Owner's Representative.

B. The Contractor shall take care not to overload the existing structure by storing material, erecting shoring, placing equipment or other materials upon or against the building.

1.17 SPECIAL PAYMENT APPLICATION REQUIREMENTS

Refer to Section 01 29 73 – Schedule of Values, sub-paragraph 1.02 D; the Contractor’s payment application’s Schedule of Valves shall to sub-divided and sub-totaled for each individual or distinct Project work area or building as necessary for TDOC accounting or grant reporting.

END OF SECTION

SECTION 01 35 13.32
DETENTION PROJECT PROCEDURES
For Work At Non-Institutional Areas

PART 1 - GENERAL

1.01 SECTION INCLUDES

General administrative, security procedural requirements and restrictions for Contractors regarding access to and use of the Tennessee Department of Correction Project site and surrounding areas; and security procedures for Contractor tools, materials, and individuals for projects that do not require access to operating institutional properties or have only limited impact on institutional operations.

1.02 DEFINITIONS

A. Owner – State of Tennessee, Department of General Services for the Department of Correction.

B. State of Emergency – Event or condition impacting the security of the facility or safety of staff, inmates or Contractors.

C. TDOC – Tennessee Department of Correction.

1.03 SUPERVISION

A. Contractor shall provide on-site supervision of construction personnel at all times.

B. Contractor shall at all times have a minimum of one (1) person at each separate work site or work crew capable of communication in English with the TDOC staff.

1.04 PROJECT/SITE CONDITIONS/REQUIREMENTS

A. Prior to mobilization of construction personnel to the site, Contractor shall ensure that personnel, subcontractors, material suppliers, etc. review the requirements of this Section.

B. The Contractor shall require that all personnel, subcontractors, material suppliers, etc. who will enter TDOC property certify their awareness of and familiarity with the requirements of this Section during orientation to the institution.

C. The Director of Facilities, Planning and Construction (FPC) is the chief administrator of the Project site. The Director of FPC has full and final supervision over all site operations and the Contractor usage of the site. The Director of FPC may delegate certain responsibilities held, as presented in this Section, to one or more designees identified by the Director of FPC.

D. The Director of FPC/designee may provide the Contractor's Superintendent with an institutional radio for communication. Superintendent shall turn in radio to designated staff upon leaving the premises each day.

E. The Contractor shall provide to the Director of FPC primary and alternate emergency contact information of individuals (Superintendent and/or foreman) to be notified during non-working hours if an event impacting the institution has occurred which warrants their notification.

F. Security Procedures Orientation

1. Each individual who enters the site on behalf of the Contractor, including but not limited to, subcontractors and material suppliers may, at the Director of FPC's discretion, receive a Security Procedures Orientation for the Project. The Director of FPC/designee will provide orientation. Prior orientation in the course of another project cannot substitute for orientation for this Project.

2. Contractor shall coordinate scheduling individuals for orientation.

3. Director of FPC will determine duration of the orientation and its agenda.

4. Contractor shall provide an interpreter, if required.

G. Contractor shall not request direction, Project documents clarification, or approval from institution staff, security escorts or other on-site personnel. The Owner's Project Manager is the Owner's designated on-site representative during construction and is the only party authorized to direct changes to the scope, cost or Contract time of the Project.

1.05 EMERGENCIES

A. If the Director of FPC declares a state of emergency, Contractor may be:

1. Required to leave premises, or

2. Confined to a specific area for duration of emergency.

B. Emergencies that may impact access to the institution include, but not limited to:

1. Fog, inclement weather or natural disaster;

2. Food, medical, or transportation emergencies;

3. Disturbance, inmate work stoppage, inmate escape, inmate hunger strike or hostage situation; and,

4. Bomb threat, chemical spill, fire, or institution evacuation.

C. At the Director of FPC's discretion and depending on the level of emergency, the Contractor may be permitted to work at the job-site trailer/staging area(s) or other institution areas outside the secure perimeter.

D. Any incident requiring police or ambulance service should be reported to the Director of FPC/designee immediately following the notification of emergency responders.

1.06 ACCESS TO SITE

A. Access is normally restricted to the period from 7:00 AM to 7:00 PM every weekday during daylight hours only. The Director of FPC may vary these hours at their discretion. Contractor shall provide the Director of FPC a minimum of forty-eight (48) hours notice before working on Saturdays, Sundays or State of Tennessee holidays. If the institution is officially closed due to an emergency condition or other State of Tennessee requirement, the Contractor will not be allowed to work.

B. The Director of FPC/designee will endeavor to notify the Contractor as soon as possible if a situation exists which may preclude timely access to or use of the Project site.

1.07 SECURITY

A. Security Escort (as applicable):

1. Normal Schedule –7:00 AM to 7:00 PM during daylight hours as approved by the Director of FPC. The Director of FPC will establish a Construction Security Contact person to work with the Contractor and serve as security escort. The staff security officer will be provided for normal work hours.

2. Normal Work Hours – Access to security escorts shall be provided during business work hours.

3. Extended Schedule – All extended hours requested by the Contractor and approved by the Director of FPC on a case-by-case basis to extend work during hours of darkness or on weekends or holidays. The Contractor shall submit a written request to the Director of FPC or designee for use of these officers a minimum of forty-eight (48) hours prior to their intended use.

4. The Contractor shall be responsible for the costs of a full time security escort in the following time increments in compliance with the following:

a. The Contractor shall have a TDOC security escort present whenever there are employees, subcontractors, vendors, etc. at the job site, no exceptions allowed;

b. Payment(s) for the security escort shall be made directly to the work site institution (or as otherwise determined by the Director of FPC) by the Contractor on a monthly basis in the following block rates:

4 hours =	$ 95.00
8 hours =	$189.00
10 hours =	$237.00

c. Overtime (more than forty (40) hours/week) shall be charged at one and one-half (1 ½) times the block rates and shall also be the same block minimum time increments.

d. Payments shall be made monthly to the institution. Payments over thirty (30) days past due shall incur interest per the General Conditions.

e. Additional security escorts required for non-conforming Contract corrective work will not be provided at no-cost to the Contractor. The Contractor shall be responsible for all escort costs in blocks of time as per 1.07 4.b. above.

5. Contractor shall endeavor to notify the Director of FPC of non-workdays.

6. The correctional officer assigned as a security escort has specific TDOC responsibilities to include (but not limited to):

a. Security of civilian workers;

b. Periodic checks of tools and equipment introduced on to TDOC property;

c. Monitoring the security of all vehicles and fuels;

d. Separation of the inmate general population should workers require access to inmate work areas; and,

e. Maintaining communication with Central Control.

7. Security escorts shall not participate in construction activities, receive construction materials or remove construction materials, either demolished or surplused, from the Project site.

B. The Contractor shall restrict the access of all persons entering upon the Owner's property in connection with the Work to the agreed upon access route, procedures and to the actual site of the Work.

C. The Contractor shall restrict activities of employees to authorized areas. Contractor employees shall not enter other institution buildings unless it is directly related to the Work of this Project.

D. The Director of FPC may conduct random vehicle searches on all vehicles entering TDOC property. Institutions restrict prohibited items, i.e., weapons, drugs, alcohol, cell phones, tobacco products, etc. Vehicle searches may be conducted with the use of detection dogs. If weapons, drugs, ammunition, or alcohol are found in a construction worker's vehicle, the owner operator is subject to arrest by local authorities and may be restricted from return to TDOC property. Persons with valid handgun carry permits are also prohibited from having their weapon on the TDOC property.

E. Individuals, vehicles, and construction facilities are subject to search at discretion of the Director of FPC/designee. Searches of individuals may include strip search at the discretion of the Director of FPC.

F. The Contractor shall, at the direction of the Director of FPC, be required to make available keys for any on-site job trailers, storage boxes, equipment containers, etc. The Director of FPC may require searches of these items or facilities at any time.

G. All institutional areas are subject to video and audio surveillance at the direction and discretion of the Director of FPC.

1.08 IDENTIFICATION OF CONTRACTOR'S PERSONNEL

A. All personnel shall be subject to a fingerprint background check conducted by the Department prior to being permitted to enter the institution. If requested by the Director of FPC, the Contractor/employee shall complete a Contractor Pre-Access Questionnaire form completing all

indicated background check information. Additionally, the Contractor/employee will be available to the institution to be fingerprinted as scheduled by the institution. Background check forms provided by the Director of FPC/designee must be completed prior to Contractor's mobilization to the site. Fingerprint background checks will be performed on employees, delivery drivers and vehicle operators employed by the Contractor, subcontractors and vendors. Any consistent driver that frequents the Project site will require a background check. Contractor should assume that background checks will take a minimum of seven (7) business days to complete. The Contractor shall notify the Director of FPC and complete the background check forms for all replacement and/or new employees, drivers, etc. not identified in the initial list of site personnel. Background checks may be repeated on any employee at any time. Any subsequent information, such as a recent arrest, may result in denial of access.

B. A valid driver's license number, social security number, date of birth and/or other similar information is required for a background check. Background information will not be disclosed to or discussed with the Contractor. Per applicable laws and TDOC policy, background information will remain confidential.

C. The Contractor shall identify for the Director of FPC, promptly upon their employ, persons who have been previously convicted of a felony, incarcerated, or who have a family member currently incarcerated in an institution managed by the Tennessee Department of Correction. Director of FPC may require such persons to be excluded from working on the premises.

D. Denial of access decisions by the Director of FPC will be final and non-negotiable.

E. The Contractor shall notify the Director of FPC immediately upon dismissal or arrest of an employee, but no later than forty-eight (48) hours from the time the Contractor is informed. The Director of FPC shall decide if the employee may continue to have access to institutional property.

F. An identification card (or pass) may be provided to each construction worker who enters the secure confines of the institution. Workers will be required to show a valid government issued photo identification card in order for a card to be issued. Identification cards shall be worn in plain sight at all times. If lost or stolen, report to the Director of FPC for issuance of a new card. Identification cards shall be returned to the Director of FPC upon completion of work or termination of employment. The cost of replacement cards/ identification shall be the Contractor's responsibility.

G. Construction Worker Apparel

1. Construction workers may be required to wear appropriate identification and clothing at correctional facilities, which may consist of or be limited by:

a. Headwear of a specific color,

b. Shirt and/or vest of a specific color,

c. Other appropriate apparel as designated by the Director of FPC/designee, and

d. The use or wearing of camouflaged clothing is subject to approval by Director of FPC.

2. Apparel depicting gang colors or symbols, contraband or inappropriate activity is not permitted. (An example would be a shirt or hat advertising beer or drug paraphernalia, etc.)

1.09 JOB CONDITIONS

A. Items that are not required for performance of Work are not permitted. All unnecessary items must be removed from vehicles so that searches may proceed quickly.

B. Association with inmates

1. Interaction with inmates is not permitted.

2. Trafficking or trading in goods with inmates is not permitted.

3. The Department of Correction adheres to a policy of Zero Tolerance regarding workplace relationships with inmates; see TN Code Annotated 41-21-241.

C. Tobacco Products, Alcoholic Beverages, Cell Phones, Weapons, and Drugs

1. All areas within the TDOC property are designated as NO SMOKING/TOBACCO FREE areas. The Contractor shall not allow any workers to use or to have in their possession tobacco products or tobacco related paraphernalia on TDOC property. All tobacco related items must remain locked in the workers vehicle while on TDOC property.

2. Alcoholic beverages, weapons, and illegal drugs are not allowed on TDOC property. Persons caught introducing illegal or banned items onto the grounds of a TDOC institution are subject to confiscation of the disallowed items, removal from the site, termination of site access privileges and prosecution.

3. Individuals requiring prescription medications during the workday shall be required to carry the medication in the original packaging from the pharmacy with the prescription name and dosage (see TCA 39-16-201) and fill out a form, suitable to Director of FPC, identifying them and their medication(s). The Contractor's Superintendent shall maintain a copy of the form(s) on file. Approval from the Director of FPC/designee must be received before the medication(s) are allowed on site. Director of FPC may require verification of prescription(s) / medication(s). Director of FPC may refuse to permit prescription/medications on site. Only enough medication for one (1) day may be brought on site. It is highly encouraged, if possible, that medications be taken at a time that allows for medications to be left outside the secure perimeter. Narcotic medications will not be allowed on the secure compound.

D. No computers, laptops, PDA's, cameras, or similar computer electronic devices will be allowed on site without written approval of the Director of FPC or designee.

E. Contractor required construction photographs and video, digital or otherwise, taken at TDOC facilities or of the Project site and buildings shall become the property of TDOC and shall not be used for purposes other than as progress documentation and other than construction related reports without the express written permission of the Director of FPC/designee. Any photographs and videos, digital and print that include inmate faces shall be immediately destroyed and not used or printed for any purpose. These requirements shall include photographs taken or construction photos used by the Contractor's subcontractors, vendors, etc. Use of finished construction photographs and videos, to include web-based use, will not be allowed unless approved in advance by the TDOC Director of FPC/designee.

1.10 TOOLS AND MATERIALS

A. A Class A tool is defined as any instrument that could be utilized:

1. To attempt an escape,

2. As a weapon, and

3. To fabricate other materials into a weapon.

B. Contractor shall make a concerted effort to introduce only necessary Class A tools onto TDOC property, and in the least possible number.

C. Hand tools shall be kept in Contractor's possession at all times when not properly stored. Tools shall be removed or placed in a locked toolbox, shed, trailer, or similar tool storage area at the end of each workday. Ramset tools may be stored on site; however, "shots" shall be removed daily and all spent shot accounted for by the Contractor.

D. Storage of hand tools on site will be permitted but such tools are securely stored in a manner acceptable to the Director of FPC. Contractor shall provide a tool storage container and lock, a tool inventory; provide a key to the Director of FPC/designee until removal of container. An inventory of storage containers may be conducted at any time as determined necessary by the Director of FPC/designee.

E. Workers shall not accept anything from an inmate or provide any tools or supplies to an inmate. Inmates are not permitted access to construction documents and related papers. Any theft shall be reported immediately.

F. Report lost tools, devices, cell-phones, etc. to the Director of FPC/designee no later than the end of the day.

G. Contractor shall be required to submit Material Safety Data Sheets (MSDS) to the Facility Safety Officer (FSO) for any product, chemicals, and materials brought onto TDOC property. Contractor shall review MSDS information and requirements for MSDS data submittal to the TDOC's Facility Safety Officer prior to the start of Work.

1.11 CONTRACTOR USE OF PREMISES AND PRISON OCCUPANCY

A. Use of the premises by Contractor will be limited to the 'Site/Project Boundaries' as identified in the Contract Documents to include temporary facilities, and reasonable access thereto. Space for staging Work, employee parking and related operations of Contractor and Contractor's employees may be provided, subject to availability. Coordinate use of premises under direction of the Director of FPC.

B. The Contractor is advised that the Project site(s) is or will be active correctional facility or other prison related area, and they shall take all necessary precautions to assure the safety of the staff and inmates, State of Tennessee employees, visitors and other contractors day and night. The Contractor shall at all time conduct operations as to insure the least inconvenience and the greatest amount of safety and security for the State's use of other nearby areas by inmates, State of Tennessee employees and the general public. The Contractor acknowledges that there are inherent dangers involved while working at a prison and TDOC will use ordinary care to keep the premises reasonably safe during the Contractor's access to the Work site.

C. The Contractor shall schedule and carry out its work such that the normal operations of the facility are given first priority. This applies particularly to noise, utility, and security systems outages and restriction of access.

D. Provide and erect before any work begins, and maintain during the progress of the Work, all necessary protective and security barriers, and warning signal. The extent of this work and details of construction shall be in accordance with the requirements of all Federal, State, and local ordinances, codes and requirements; and shall meet the approval of all authorities having jurisdiction and the Director of FPC.

E. Control traffic to/from the Work area(s) and occupied area(s) to prevent disruptions to the normal facility operation.

F. Exercise the utmost care to protect existing site features and landscaping etc. from damage. Contractor shall report damage immediately, but no later than the end of the workday, to the Director of FPC. Repair of security system cabling and cameras, lighting systems, fiber optic cabling and other critical systems shall be made immediately, and the costs of temporary replacement systems and TDOC labor, as needed, shall be the responsibility of the Contractor.

G. Institutional staff shall not receive deliveries for the Contractor or for the Project. The Contractor shall receive all Project related materials at their job site office or off-site, as required.

1.12 TRANSPORTATION FACILITIES

A. Provide adequate protection for lawns, curbs, and sidewalks over which trucks and equipment pass to reach the Project site(s).

B. Contractor shall provide flagmen and traffic control management while using areas of the Project site or outside the Project limits. The Contractor shall be responsible for maintaining vehicular traffic on local roads adjacent to and directly leading to and/or through the areas that are affected by the construction Project. Prior to changing any traffic patterns, the Contractor shall submit a Maintenance-of-Traffic Plan identifying how the vehicular and pedestrian traffic flows will be modified, subject to the review and approval by the Director of FPC, TDOC and authorities having

jurisdiction. The Contractor shall provide proper signage and personnel to identify and manage temporary roadway relocations or locations where traffic may be impacted.

C. Contractor's Vehicles

1. Personal vehicles for Contractor's employees shall be parked at an area as designated by the Director of FPC. Parking permits may be required for all construction personnel and business vehicles.

2. Do not permit contractor related vehicles to park on any street or other area of the State's property except in the area(s) so designated by the Director of FPC/designee.

3. Work trucks, with logos and company names clearly visible, necessary to the progress of the Project (as determined by the Director of FPC) will be permitted on-site as needed if they are capable of being fully locked, including fuel tanks and tool compartments.

4. All vehicles shall be locked at all times. Any vehicle determined by the Director of FPC to be a security threat or represents what could be a threat will not be allowed on state property.

5. All drivers shall have a valid driver's license. Vehicle drivers without a valid driver's license will not be granted access to TDOC property and may be banned from the site and subject to arrest by local authorities.

1.13 WORK SEQUENCE

A. The Work shall be executed to minimize disruption of activities at the Project site(s) or buildings. Contractor shall submit a written and graphic plan for staging of work, and the layout and location of material areas.

B. The Director of FPC shall be notified in writing seventy-two (72) hours prior to any utility, communication, electronic security device(s) cut-off. The required notification of a cut-off or interruptions shall include, but not be limited to, service(s) to be cut-off, the expected impact on the facility, the date and time of the cut-off and the anticipated duration of the cut-off. Notification shall pertain to all or any portion of the Project site(s), institution buildings, adjacent State of Tennessee sites, or private properties required by the progress of the Work. The Director of FPC shall have final approval of the exact time for and duration of any proposed shutdown.

1.14 JOB SIGNS AND PUBLICITY RELEASES

A. Advertising Signage: The use or installation of Contractor or subcontractor advertising signage is prohibited. Do not display such advertising or job signs except as may be required for identification and deliveries.

B. Owner-Furnished Warning Signs: Whenever required by the TDOC On-site Representative, TDOC furnished warning signs shall be posted as directed.

C. The Contractor, subcontractors, vendors, material suppliers, etc. shall not release any information, story, photograph, plan or drawing-relating information about the Project to anyone, including the press or other public communications mediums.

END OF SECTION