ATYPICAL UST SYSTEMS- EFFECTIVE DATE – ~~09/09/2011~~05/18/2012 DRAFT

This document provides technical and specific knowledge regarding issues related to underground storage tank or component configurations and/~~-~~or applications which are considered to occur less frequently or may be more complex than is typically encountered. This document will attempt to provide guidance and direction on the applicability of the underground storage tank rules in these circumstances. Each Section will be discussed separately.

All rules referred to in this document are contained in Chapter ~~1200-1-15~~0400-18-01 and are available on the Division of Underground Storage Tanks website at http://www.tn.gov/sos/rules/0400/0400-18/0400-18-01.20120307.pdf~~at http://www.tn.gov/sos/rules/1200/1200-01/1200-01-15.20110202.pdf~~

~~The UST Board is currently revising its rules to renumber them following chapters assigned to the Department of Environment and Conservation. The new chapter will be 0400-18-01 when the renumbering is adopted and a link to the renumbered chapter will be on the Division's website referenced above.~~

HIGH THROUGHPUT LOCATIONS

An inspector may encounter many different challenges when inspecting high throughput locations. Product holding capacities are large, and the location layout and physical equipment may be very different than what is typically encountered at most other retail locations. Traffic flow is usually high, with lots of vehicles, both commercial and passenger vehicles usually in motion at the location, so inspector safety is very important.

High throughput locations are not limited to truck stops, or 24- hour operations, although some of the more complex tank and piping configurations will be seen at those facilities. Large retail chain operations are adding gasoline sales to their list of customer services. There are also an increasing number of convenience stores that are partnering with food chain or beverage chain sales to increase customer traffic to those locations. Many of these locations have recently undergone a “facelift” or remodel to attract customers and increase fuel sales.

Some of these locations may have been first inspected when they were “average” retail locations and now the operations are more complex. Tank and/or piping configurations may have changed since the last inspection. Single product dispensers may have been replaced by multi-product dispensers. Additional fueling locations may have been added, and additional products such as diesel or E-85 may be offered to customers. Be aware if you are inspecting a location that has undergone a transformation since the last inspection, there may be differences in what is there since the last inspection. If there are changes present in the tank and piping material that have not been reported on the notification form, those changes must be reported by the tank owner as required by rule .03(1)(g).

The same rules that apply to petroleum tanks at other UST facilities also apply to high throughput locations; it just makes the operation and inspection more difficult to always recognize how the rules may apply at these locations. Here are a few things to be aware of in conducting an inspection at high throughput locations:

Leak Detection

Using traditional tank and piping leak detection methods at high throughput locations is more complicated. However, high throughput locations ~~are subject to~~must comply with the release detection performance standards set forth in rule .04(1)(a)3. Some things to be considered are:

- **Automatic Tank Gauges**- High product throughput, frequent deliveries, and little or no tank quiet time make static testing for these tanks virtually impossible. Also many product tanks will be manifolded and product may be continually moving between tanks. The product storage capacity will exceed the static testing ability of many ATGs. The solution for these locations using automatic tank gauges is a Continuous Statistical Leak Detection (CSLD) system. Tanks using this system are not required to shut down to do monthly testing as long as the system is able to deliver a monthly result in accordance with rule .04(3)(d)3. Locations that are not using a CSLD program with their ATG must conduct a monthly static test in accordance with rule .04(3)(d)2. See the sections on CSLD in the ATG and SIR ~~Compliance Guidance Documents~~Technical Chapters for the advantages and capabilities of using CSLD.

  ATGs have practical size limitations as mentioned in the third party evaluation as shown on the NWGLDE list. Most ATGs have been evaluated for tanks ranging from 15,000 to 20,000 gallons in most cases. Since most listed ATGs were not evaluated with manifolded tanks, the size limitation applies to all tanks in the system. Many high throughput locations will be using a CSLD program in conjunction with their ATG. Current NWGLDE Listings show a range for CSLD systems from 18,000 gallons to 100,000 gallons, with the ~~median~~ average size at about 38,000 gallons. These programs also have an upper limit on size, but the limitation applies to the total volume in the manifolded tank system and is much greater than a single tank. Inspectors should make sure that the capacity of tanks being monitored at any location is within the size limitations shown on the NWGLDE list and in accordance with performance standards set forth in rule .04(1)(a)3. and rules .04(3)(d)2. and 3. If that is not the case, the tank owner should be ~~informed and~~ instructed to use a method which is appropriate for the capacity at the location in accordance with rule .04(1)(e) or complete closure procedures in accordance with rule .04(1)(d).

  When high throughput locations use a single ATG for release detection and the tanks are manifolded, the ATG must be using a CSLD program. ATGs generally work well in single tank installations, but if two or more tanks are manifolded with only one probe in

the tanks, the ATG is not capable of compensating for product transfers between tanks without CSLD software. The CSLD software compensates for these product transfers. If the ~~tank owner~~ ATG does not have CSLD, ~~he must have~~ separate probes must be installed in each tank and a means of breaking the siphon between the tanks and ~~he must conduct~~ a separate static test conducted each month for each tank in accordance with rule .04(3)(d)2. Although this approach will work, it is usually impractical at high throughput locations.

An additional benefit of using CSLD with ATGs in high throughput locations are the fact that the CSLD does not require any tank down time to determine a monthly monitoring result, and CSLD is capable of testing tanks at lower product levels than many probes which only conduct static testing. (See Automatic Tank Gauge ~~CGD~~ Technical Chapter for additional information on CSLD methods) Not having to shut tanks down to do static testing is extremely important to owners of high throughput locations.

Automatic tank gauges certified by the third party evaluator for static testing are not restricted by monthly throughput. However, CSLD methods do have product throughput limitations. Locations must not exceed the monthly throughput limitations shown on the NWGLDE list or the result may not be valid. Currently, the NWGLDE list shows product throughput limitations ranging from nearly 127,000 gallons to 2.7 million gallons per month. The median figure lies between 154,000 and 257,000 gallons per month. Vendors frequently undergo revisions to their third party evaluations in order to improve their listings for system capacity and throughput limitations, so inspectors should refer to the NWGLDE website occasionally for the most current information.

- **Interstitial Monitoring**- (all tanks and piping installed or replaced after 7/24/07 shall be secondarily contained with interstitial monitoring in accordance with rules .02(1)(a)2. and .02(1)(b)2., however IM may be used for older tanks). There are no unique requirements for high throughput facilities using IM for release detection. Refer to rule .04(3)(g)1. and ~~CGD 108~~Technical Chapter 3.4 for specific requirements relative to IM. Hydrostatic and vacuum methods are more difficult to implement due to long piping runs at high throughput facilities.

- **Statistical Inventory Reconciliation**- SIR can be done on these locations in accordance with .04(3)(h), but very accurate data likely will only be gathered by means of an ATG. Unless the tanks can be shut down for a short time daily to gather inventory data using a gauging stick, inconclusives will likely result. What inspectors will likely encounter is locations that have ATGs for leak detection will also be using a CSLD program. Refer to rule .04(3)(h) and ~~CGD 107~~Technical Chapter 3.3 for specific requirements relative to SIR.

Pressurized Piping

Many high throughput locations will have mechanical line leak detectors (MLLDs). Larger diameter product pipelines (3" diameter) and long piping runs connecting tanks and many dispensers are often seen at high throughput facilities. This often requires the use of high volume line leak detectors sometimes called "Big Flow" line leak detectors. Companies make high flow MLLDs to accommodate larger diameter pipelines and additional fluid dynamics that accompany high throughput locations. These are generally seen in a special adapter fitting located on the piping itself rather than on the submersible pump. As long as there is a nozzle pumping fuel, a MLLD will never return to the leak sensing mode. So, a high throughput location may have Big Flow MLLDs installed, but may not have effective catastrophic line leak detection as required by rule .04(2)(b)1. and .04(4).

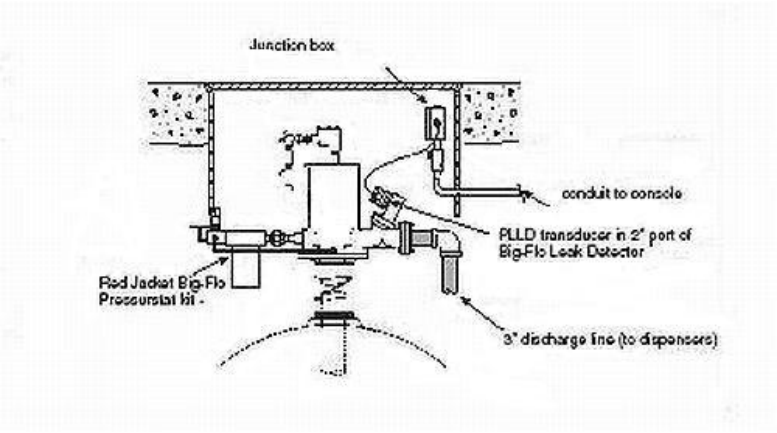

The preferred location of the line leak detector is in the top of the submersible pump, however, if it cannot be installed this way, it should be installed as close as practicable to the pump head in the special tee fitting. In lieu of relocating the MLLD, the O/O may install a sump sensor if **all** of the following conditions are met: 1. The sump must be liquid tight at the bottom; 2. The sump sensor must be located at the lowest point of the sump; 3. The sump sensor must be programmed to alarm if~~shut down the submersible pump if~~ it senses a liquid and the O/O must respond appropriately; 4. The O/O must create a monthly record of sensor status; and 5. The sensor must be tested annually. See rule .04(2)(a), .04(3)(g) and .04(4)(a). See ~~CGD 110~~Technical Chapter 3.5 for specific requirements relative to pressurized piping.

This LLD is not located on the pump head, and piping between the LLD and the pump head is not monitored for catastrophic leaks. Mounting LLDs in piping off the STP head is generally only seen in older model pumps where there is not a port for mounting an LLD.

This LLD is located in the proper fitting in close proximity to the STP head. This is a correct installation for the LLD on this older model STP.

Spill containment

Some high throughput locations have spill containment areas in lieu of normal spill buckets. These may be "cut aways" or below grade areas in the concrete where spills from product piping can collect in these areas~~ and drain to an oil/water separator~~. Sometimes these are areas where concrete barriers have been installed at grade to create a diked area to contain spills from the fueling operation. Most often, all product fill pipes will share a common area. Just as with spill buckets, these areas need to be kept free of debris ~~and the drain to the oil/water separator kept obstruction free~~ in accordance with rule .02(3)(b). These areas should also be free of cracks which would allow spilled product to leak into the ground. If cracks are present the concrete must be patched with a petroleum resistant material. These containment areas are subject to the monthly spill bucket visual inspection requirements of rule .02(3)(b)~~3~~. See ~~CGD 113~~Technical Chapter 4.2 for specific requirements relative to spill containment.

Contained area on pavement for spills

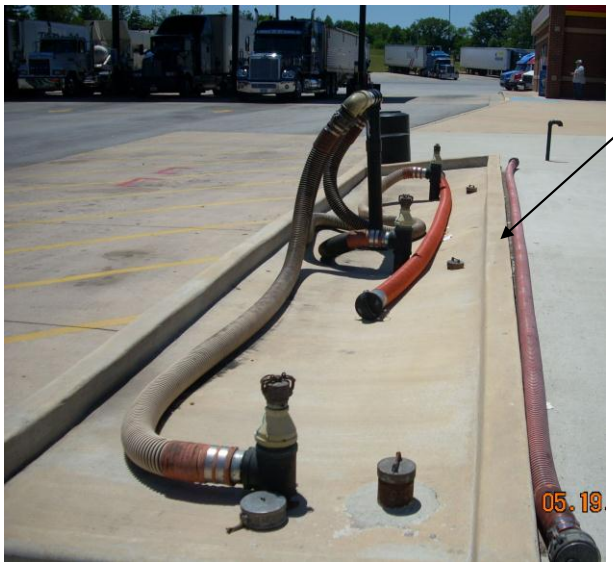

Longitudinal view of the spill containment area at a high throughput facility.

Cathodic protection

Corrosion protection at a high throughput location may be a challenge because of the size of the location and presence of other underground structures which could interfere with the operation of cathodic protection systems. CP test results should be accompanied by a site map indicating where the reference cell was placed as well as where remote potentials were obtained. See rule .02(4) and ~~CGD 1~~Technical Chapter 4.1~~09~~ for specific requirements relative to corrosion protection.

System Configuration

Figure 1., below, shows a system in which the piping system is connected from two tanks. This is not a true manifold tank system, since product does not flow freely between the tanks. This

configuration is often seen at high volume throughput locations due to the need to maintain fuel delivery pressures beyond what one submersible pump can generate. Of importance in this configuration is the line leak detector~~s~~ since the configuration and sequencing of line leak detectors and pump is important to meet the 3.0 gph catastrophic leak detection criterion. See rule .04(4)(a) and ~~CGD 110~~Technical Chapter 3.5 for specific requirements for line leak detectors on pressurized piping. Figure 2., below, shows installation of pressure relief check valves when two submersibles are used in this configuration in a common piping system.

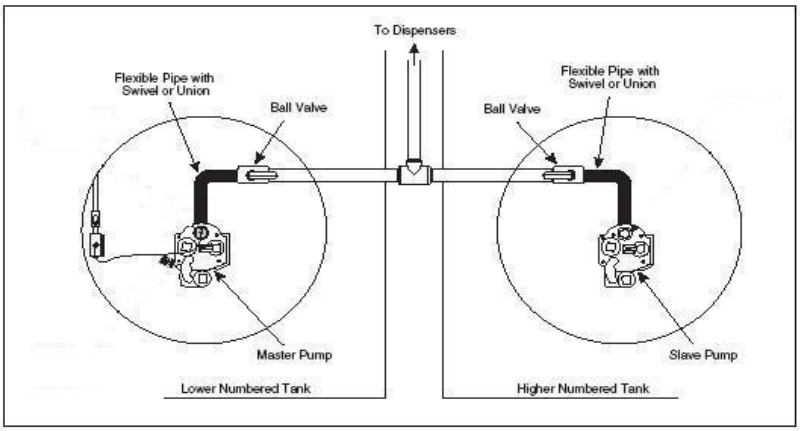

Figure 1.

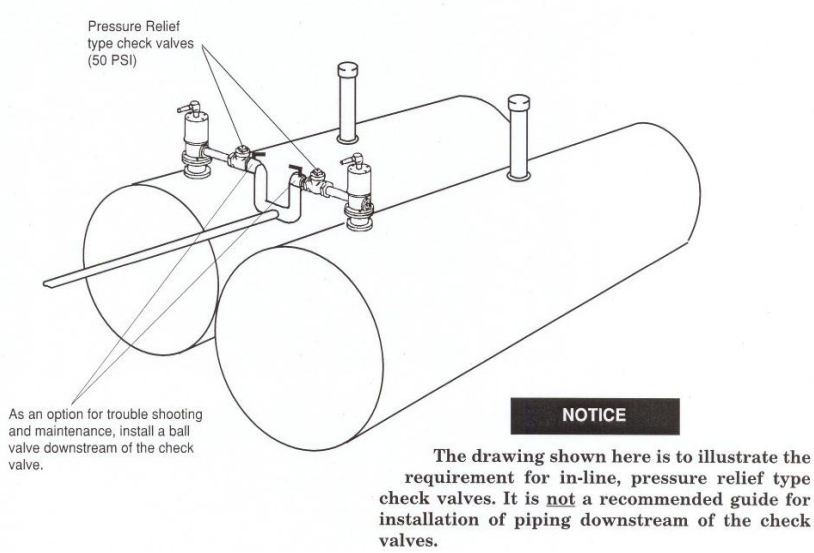

Figure 2

SATELLITE DISPENSERS

Satellite dispensers remotely dispense fuel pumped from a master dispenser. In some situations, this dispenser configuration allows a driver to fill both tanks simultaneously and speed up the fueling time with one side utilizing the master dispenser and the other us~~es~~ing the satellite dispenser. If an improper configuration is used, any pressurized piping from the master dispenser to the satellite dispenser may not be monitored for leaks or have catastrophic line leak detection ~~in place~~ between the master and the satellite dispenser in accordance with rule .04(4)(a). Also, if the same improper configuration is used, any pressurized piping between the master dispenser and the satellite dispenser may not be able to be tightness tested in accordance with rule .04(4)(b) if required. Red Jacket issued a Field Service Bulletin in June, 1996 (RJ-23-51) addressing these issues. See ~~CGD-110~~Technical Chapter 3.5 for a copy of the bulletin.

The diagrams below illustrate two versions of proper configuration for using a single LLD with a master/satellite dispenser. Either of these configurations is acceptable and allows the line to be monitored for detecting catastrophic line leaks as well as tightness testing.

DIAGRAMS FOR PROPER LOCATION OF SOLENOID VALVES IN A MASTER/SATELLITE SYSTEM UTILIZING MECHANICAL OR RED JACKET ELECTRONIC LINE LEAK DETECTORS:

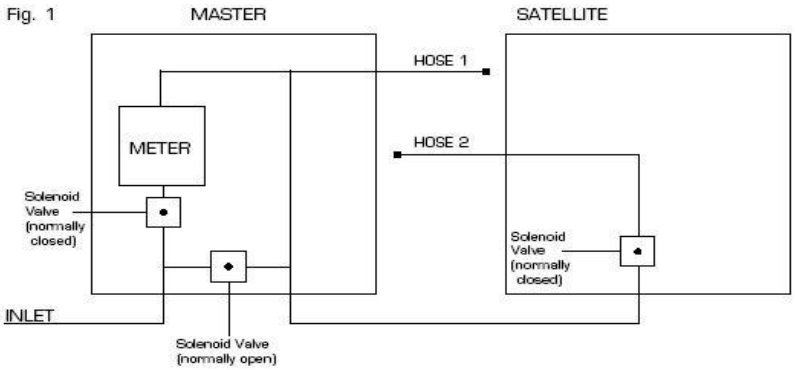

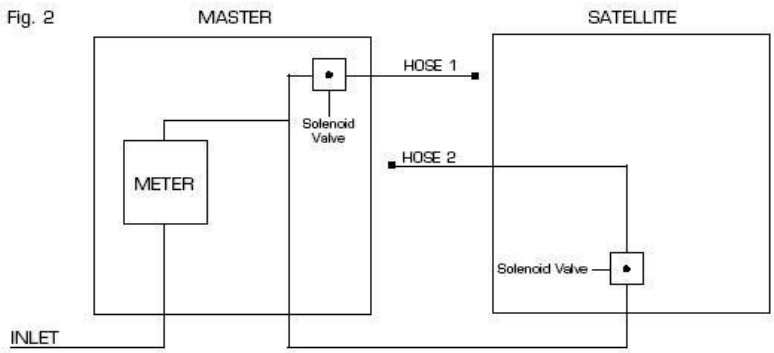

During an onsite inspection, inspectors may not be able to visually verify the ~~Inspectors are not trained to recognize the details of the piping~~ configuration ~~and not qualified~~ to determine if it is installed correctly to be compliant with the 3.0 gph at 10 psi criterion for line leak detection in accordance with rule .04(4)(a). ~~However, if you encounter~~ As a result, if a facility with master/satellite dispensing systems is encountered, the inspector ~~you should request verification from~~ will require the owner/operator to have someone who is familiar with the piping system and dispenser installations verify that the dispensing systems are properly configured in accordance with .02(1)(b). Such ~~This~~ verification is part of the facility records according to Division regulations and should be retained by the tank owner in accordance with rule .03(2). This document ~~You~~ should also be maintained ~~a copy for the compliance facility file in your office~~ in the field office compliance file. Once the configuration is confirmed, the inspector should make note of proper configuration in the inspection database for referencing for a future inspection. This is not a recurring requirement unless the system configuration changes.

If it is discovered that the system is not configured properly, then the affected piping system is not in compliance with Division regulations and must be brought into compliance in a timely manner.

See ~~CGD 110~~Technical Chapter 3.5 for specific requirements relative to line tightness testing. ~~For proper tightness testing, see the line tightness test CGD 110.~~

OIL/WATER SEPARATORS (OWS)

Some facilities may have an OWS that is made of steel ~~and shaped like a tank or made of~~ or concrete. A single vessel would be considered a wastewater treatment tank and would be deferred from the regulations as listed in rule .01(2)(b)1. except for release response and corrective action as required by rule .06. An OWS with a separate vessel or holding tank in

which the waste petroleum is collected apart from the wastewater would be regulated. Some examples are shown below:

Two Types of Single Vessel Oil Water Separators - not regulated, as illustrated to left and just below

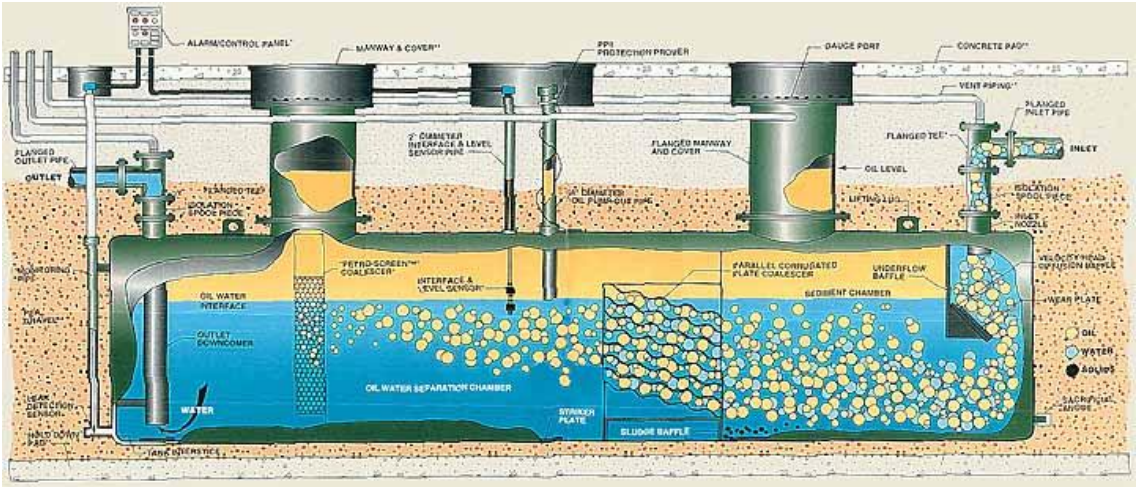

The following configuration illustrates a regulated tank - Holding Tank B

(see Appendix 1)

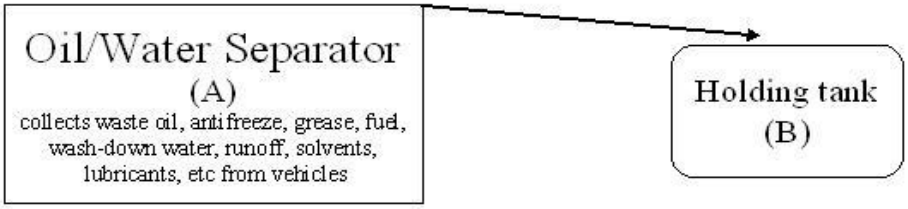

FIELD CONSTRUCTED TANKS

Some facilities may have large field constructed tanks which may supply underground tanks prior to fuel entering the fuel delivery piping system. UST systems with field constructed tanks are deferred from Division rules as stated in rule .01(3)(b)5. except for release response and corrective action in accordance with rule .06 in the event of a release.

DIESEL EXHAUST FLUID (DEF) TANKS

These tanks are solutions of water and urea which are **not** petroleum compounds and are therefore not regulated.

KNOCK OUT TANKS

These tanks are sometimes seen at fuel terminals or bulk plants. These are part of the vapor recovery units and are often entirely aboveground. These tanks may use either a cryogenic process to condense fuel vapors back into liquid, or an absorption process which removes vapors by carbon absorption. Inspectors must determine if an underground knock out tank is storing petroleum and (is not expeditiously emptied) in accordance with rule .01(2)(b)9., and if so, it **is** considered a regulated tank. Even if the tank is deferred in accordance with .01(2)(b), release response and correction action are required in accordance with rule .06. Occasionally, a thermal process is used to burn fuel vapors. These tanks are normally empty and would only contain

amounts of liquid fuel in the event of a fueling incident where fuel was "burped" back into the vapor recovery piping, or the tanker was accidentally overfilled during tanker loading.

REMOTE FILLS

Some locations may make use of remote fills where the tank location, store traffic flow pattern, or street ingress and egress, make fueling when customers are present either disruptive, congesting to site traffic flow, or possibly increases the chances that a vehicle would strike a dispenser or a delivery truck. These fills are not located directly over the tank, but are offset from the tank but must have a spill prevention device installed in accordance with rules .02(3)(a)1.(i) and .02(3)(b). Fuel travels laterally via gravity flow until it drops into the tank. Many times the tank will also have a vertical fill pipe which can be used to stick the tank. Remote fills are not allowed in conjunction with ball float valves for overfill protection, suction piping or coaxial Stage One Vapor Recovery. See ~~CGD 113~~Technical Chapter 4.2 for specific requirements related to spill and overfill.

Remote fills may be located some distance from the actual tanks. Proper fitting caps are required as are monthly inspections. See rule .02(3)(b)4.

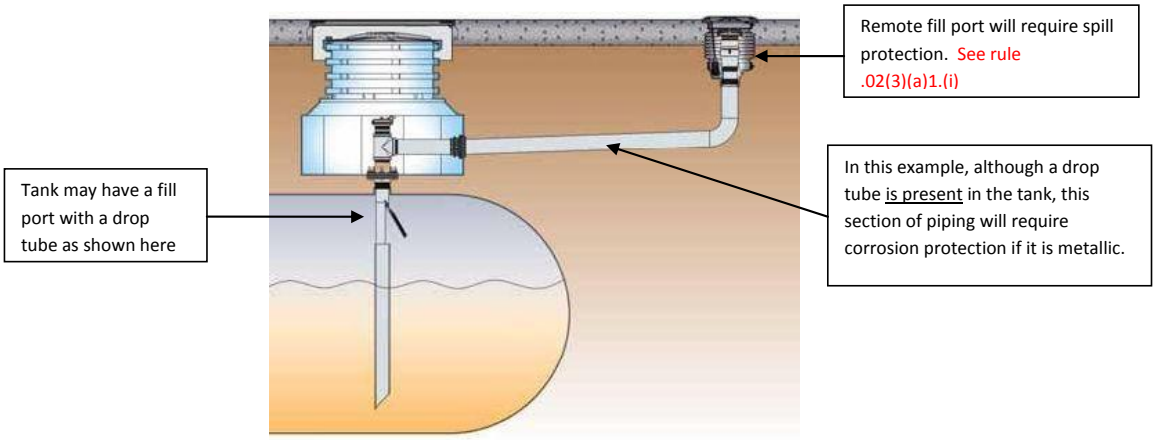

If remote fills are present, they should be inspected the same as ~~you would~~ inspecting a typical fill pipe with the following additional items to be determined:

1. If the product delivery piping from the remote fill to the tank is **metallic**, then it must be corrosion protected in accordance with rule .02(4)(b) and as discussed in ~~CGD 109~~Technical Chapter 4.1. It should be bonded in and continuous with the tank and other structures in an impressed current system. In a galvanic system, it should be isolated and have a separate cathodic protection system from the tank, and

2. If there is an unlocked or accessible vertical fill pipe present in the tank in addition to the remote fill, consult the Standardized Inspection Process, Fill Port/Spill Bucket(s) Location Section.

MANIFOLDED TANKS

Some locations may manifold product tanks together. This action provides larger storage capacity and reduces the number of deliveries needed to keep the location in operation. SIR release detection for manifolded tanks will typically only show results for one tank. See ~~CGDs~~ Technical Chapters for applicable release detection methods. There are no release detection requirements for the siphon piping between manifolded tank systems if it meets rule .04(2)(b)2. Any portion of the manifolded system that is contact with the ground, standing water or other liquids shall be protected from corrosion in accordance with rule .02(4). Manifolded tanks are connected typically as outlined in Figure 1.

Figure 1. shows one submersible pump used to pump fuel from one tank in a manifolded tank system. The siphon line allows product to flow from the other tank(s) to the tank with the submersible. Once the submersible shuts down, the product will continue to transfer between the

tanks in the manifold until the product level in each tank in the manifold is the same. (This does not mean that the amount of product in each tank is the same, since the tanks may not be identical in size.)

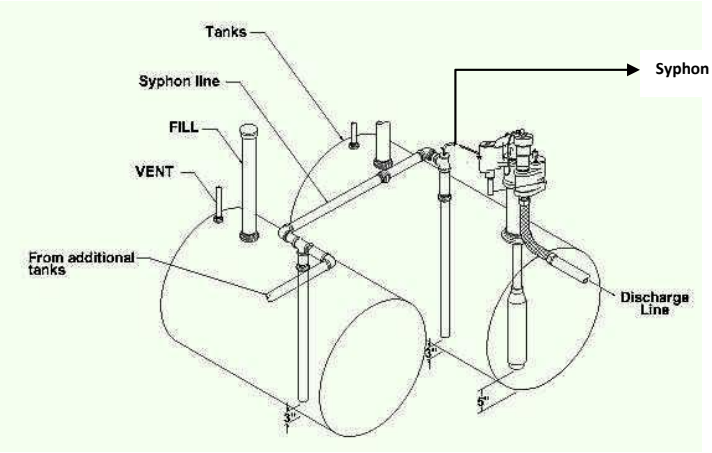

Figure 1.

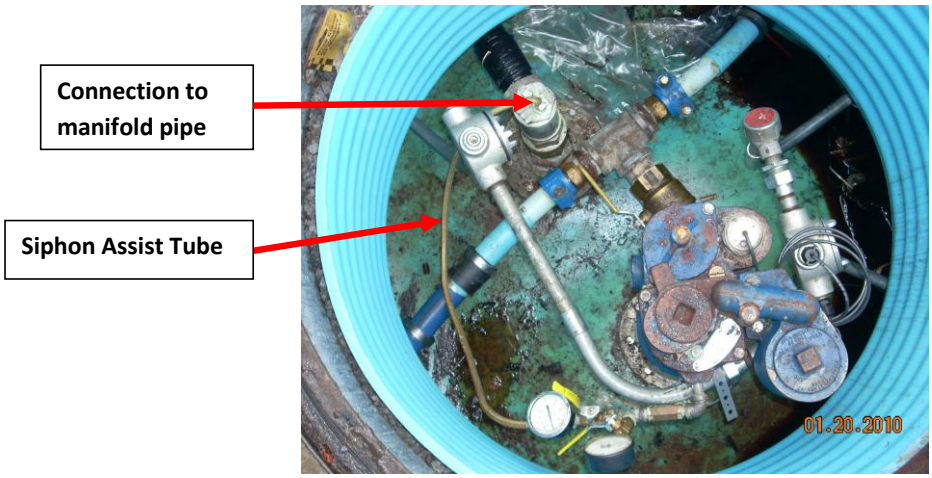

Figure 2.

MARINAS

Some marinas will have unique configurations. Sometimes tanks will be elevated significantly above the elevation of the dispensers. If the tank is located at an elevation greater than the dispenser, an anti-siphon valve should be installed at the tank. Look for line leak detector mounted in an offset tee adapter (the MLLD should not be located directly on the submersible pump). Ensure a pressure relief valve is located between the tee fitting and the submersible pump head. Whenever the dispenser is lower than the tank (or any product in the tank), then this configuration must be present to comply with requirements of rule .04(4)(a).

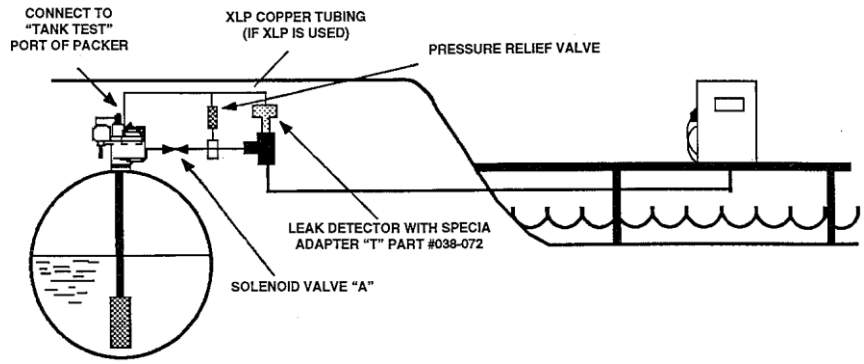

STAGE 1 AND 2 VAPOR RECOVERY SYSTEMS

Stage I vapor recovery is used during the refueling of gasoline storage tanks to reduce hydrocarbon emissions and is regulated by the TDEC's Division of Air Pollution Control unless a local authority has jurisdiction. Vapors in the tank, which are displaced by the incoming gasoline, are routed through a hose into the cargo tanker, instead of being vented to the atmosphere. Sometimes you will find piping terminated in the dispenser sump. Piping will sometimes have similar flexible connectors which are usually a smaller diameter. There are three types of Stage I systems: **coaxial, dual point (tank and vent) and remote as illustrated in the diagrams and photo below:**

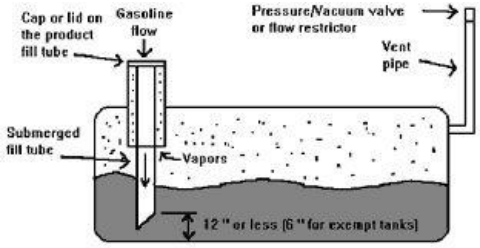

Coaxial-uses single hose

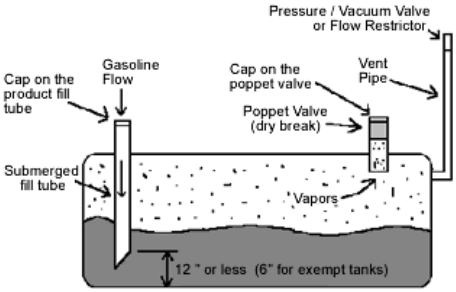

Dual point (tank and vent)

As a retrofit of tanks for Stage 1 Vapor Recovery requirements, some tank owners have chosen to install Stage 1 vapor recovery fittings in vent piping in lieu of using a tank top opening for these fittings. This type of retrofit will only work when the vent line is fitted with a pressure activated vent line cap. This cap will normally remain closed and open only when a positive or negative pressure of approximately 2 psi is reached inside the tank. A traditional vent cap open to the atmosphere will render the Stage 1 vapor recovery fittings useless, and must not be used in this application. All other tank top openings such as the fill pipe and ATG riser must be sealed vapor tight for the Stage 1 vent line retrofit to work properly.

Several counties in Tennessee have recently been re-designated as non-attainment for the new, tighter federal air quality standard for ozone (smog). As a part of a strategy to meet the new standard, the State Air Pollution Control Board has issued a new air pollution regulation extending Stage I Vapor Recovery (for loading and unloading tankers) to most gasoline dispensing facilities in designated counties. See the TDEC's Division of Air Pollution Control website to determine affected counties.

Stage II vapor recovery systems collect gasoline vapors from vehicles' fuel tanks while customers dispense gasoline products into their vehicles at gasoline dispensing facilities. The Stage II system consists of special nozzles and coaxial hoses at each gasoline pump that captures vapors from the vehicle's fuel tank and routes them to the station's underground or aboveground storage tank(s) during the refueling process.

When using Stage II Vapor Recovery equipment, the escape of gasoline vapors is held to a minimum, helping to protect the customers from the harmful effects of gasoline vapors as well as minimizing the escape of pollutants that contribute to air pollution.

The following diagram illustrates a typical Stage II setup.

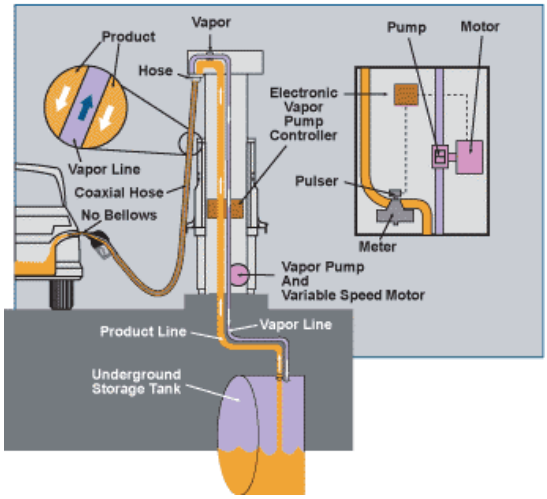

Additional piping associated with vapor recovery systems may occasionally be found during an inspection. This piping usually consists of a small diameter copper tube originating from the functional element area of the STP head and exiting the STP sump wall (Figure 1) into the ground. The tube will connect to the vapor recovery pipe somewhere outside of the STP sump between the sump and the dispenser. Sometimes this connection to the pipe is visible in a small access port (Figure 2). This piping is for the purpose of assisting the vapor recovery from the dispensers back to the tanks due to elevation differences. Because it is very similar to the piping associated with siphon assists for manifolded tanks (see figure X HeyJohn look here) under manifolded tank section above), the two configurations may be confused. An inspector must be familiar with both configurations and be able to distinguish between the two. All piping associated with vapor recovery is not required to have corrosion protection (CP) since it does not "routinely contain product". But, piping associated with manifolded tank siphon assist does "routinely contain product" and requires CP if in contact with the ground or any liquid. See rule .02(4)(b) and ~~CGD 109~~Technical Chapter 4.1 for specific requirements for CP.

Formatted: Highlight

Figure 1

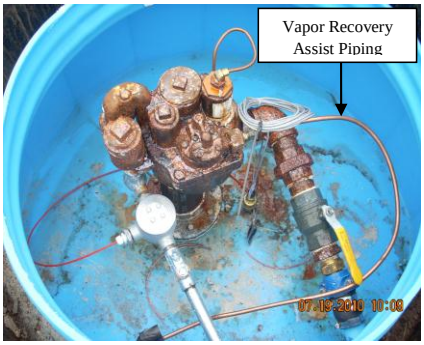

(Does not require CP)

Figure 2

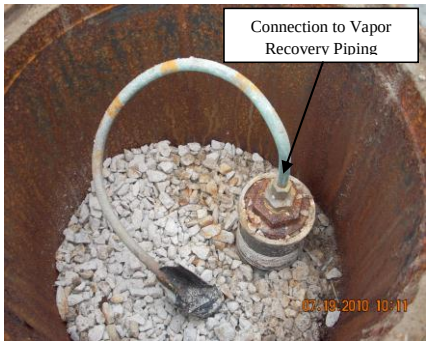

(Does not require CP)

EMERGENCY GENERATORS

Emergency generator tanks are typically deferred from release detection requirements but spill/overfill are still required in rule .02(3). However, tank or piping components of an emergency generator UST system installed or replaced on or after July 24, 2007, shall be secondarily contained and shall conduct interstitial monitoring (unless the piping is suction) in accordance with rules .02(2)(a) and (b) and .04(3)(g)1. Corrosion protection is also required in accordance with .02(4). The most commonly found piping is copper and should also be corrosion protected. Emergency generator tank systems are commonly found at the following locations: hospitals, prisons, courthouses, office buildings, certain manufacturing facilities, schools and nursing homes unless it is classified as a dual purpose tank (see below).

DUAL PURPOSE TANKS

"Dual purpose tank" refers to a tank which is used for the production of heat in permanently installed heating equipment *and* used for the generation of power in a power-outage emergency. Dual purpose tanks are exempt from UST law and regulations if 1.) One of the petroleum products listed in the definition of heating oil is stored in the tank; or 2.) the tank is used to operate boilers, furnaces, heating equipment or to produce steam, process heat or any other heating purpose using a petroleum product (including waste oil) not specifically listed in the regulatory definition of heating oil. See Appendix 2 (7/20/2001 memo Dual Purpose Tanks).

"SLOP" TANKS

Otherwise known as waste oil tanks, are commonly found at auto repair shops, trucking facilities, county and state transportation facilities, bulk plants and certain manufacturing facilities. These tanks are subject to all regulations with the exception of spill/overfill requirements (if filled with 25 gallons or less at one time). See rule .02(3)(a)2.(ii).

FARM TANKS

These are tanks located on a tract of land devoted to the production of crops or raising animals, including fish, and associated residences and improvements and is located on the farm property. "Farm" includes fish hatcheries, rangeland and nurseries with growing operations. Farm tanks of 1,100 gallons or less capacity used for storing motor fuel for **non-commercial purposes** are not regulated. "Farm" does not include laboratories where animals are raised, land used to grow timber, and pesticide aviation operations. Moreover, this definition does not include garden centers or retail stores where the product of nursery farms is marketed but not produced. See rule .01(4).

RESIDENTIAL TANKS

These are tanks located on a property used primarily for dwelling purposes. Residential tanks of 1,100 gallons or less capacity used for storing motor fuel for **non-commercial purposes** are not regulated. See rule .01(4).

SEASONAL TANKS

Seasonal tanks often require an alternate release detection method during seasonal low product months such as kerosene that is used in cold seasonal periods in accordance with rule .04(1)(e). Tanks may need to be temporarily closed for a portion of the year if release detection is not being properly performed in accordance with rules .04(1)(d) and .07(1).

UNMANNED FACILITIES

Occasionally tanks will be located at facilities which are unmanned. These locations are typically not retail locations, but may be owned by government or businesses that use these to fuel fleet or company owned vehicles. Emergency generator tanks at remote locations may be considered

unmanned facilities. Usually a card reader is used to make a fuel sales transaction where fuel may be purchased, although the unmanned facility may be simply tanks located in secured areas which require authorized access or a key to be able to gain access to the tanks. Locations which have personnel present during normal business hours, even though fuel may be dispensed when personnel are not present, are not considered unmanned locations. Unmanned locations typically do not have any personnel present.

Two important differences for unmanned facilities are as follows:

1. Effective August 8, 2012, unmanned facilities are not required to have a Class C operator on site ~~whenever the location is open. Unmanned facilities will~~ but must have a Class A and Class B Operator designated for this location in accordance with rule .16(3)(c). However, Class C Operator responsibilities ~~will be partially~~ may be met through appropriate conspicuously posted signage at the location. The Division will publish guidance for signage for unmanned facility Class C Operators in the future.

2. Any unmanned facility which utilizes an electronic line leak detector for line leak detection, must have the positive pump shutdown feature for a 3.0 gph leak enabled. The alarm feature is not appropriate for an unmanned location in the event of a catastrophic line leak as required by rule .04(4).

~~PETROFIRST™~~-ALL-IN-ONE ~~TANK~~ UST SYSTEM

A recent new innovation is the all-in-one UST system~~PetroFirst™ Tank System~~ which incorporates tank, dispensers, and canopy in an integrated system which seeks to minimize the space needed for a conventional storage and dispensing system. The concept requires only the space necessary to bury the storage tank and place the drive slab, dispensers, canopy protection, lighting and signage immediately above the buried storage tank. Product piping is contained in compartments above the tank and dispensers are located atop the tank, minimizing product piping runs. These locations will have remote fills and are subject to corrosion protection in accordance with rule .02(4) if made of unprotected steel.

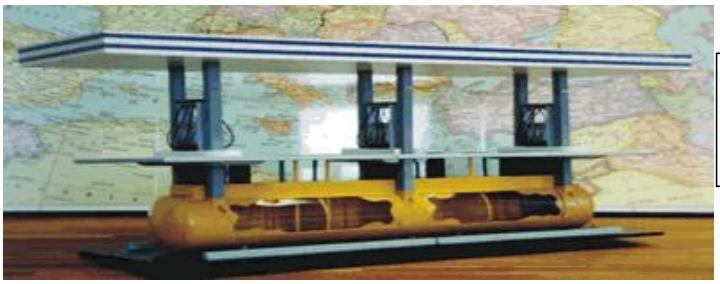

PetroFirst™ Tank System Model showing finished design. Individual configurations may vary.

Construction photos showing different stages of installation

AIRPORTS

Some unusual tank configurations may be found associated with fueling systems at airports. Underground storage tank (UST) systems may be in close proximity to each other as well as aboveground storage tank (AST) systems in what is called a "tank farm". These "farms" can appear to be very confusing when first observed due to the numerous aboveground transfer pumps, filter canisters and piping. Careful investigation must be conducted to differentiate the separate tanks and associated piping. Some systems may be associated with regulated or unregulated oil/water separator systems. Some may be associated with unregulated tanks which store substances such as glycol (de-icing fluid). These configurations may result in unusual release detection or corrosion protection requirements.

Examples:

1. Piping associated with other tank systems: Airports may have "off-specification" (off spec) fuel tanks. These are tanks which store waste fuel which cannot be re-used. These tanks may also be filled with other oils or fuels which are pumped (transfer pump) from an adjacent oil/water separator via a steel pipe. This piping may be completely underground, all above ground, or just partially underground. As a result, this creates a release detection issue as well as a corrosion issue for the pressurized underground piping between the two tank systems. The tank for the oil/water separator may or may not be regulated (see previous "Oil/water Separators" section). Even if the oil/water separator tank system is not regulated, the pressurized piping into the "off spec" tank is regulated and requires release detection in accordance with rule .04 and corrosion protection in accordance with rule .02(4).

The release detection issue may be difficult to correct as a result of the nature of configuration of this pressurized piping (i.e., to install a line leak detector for catastrophic release detection or conduct tightness testing). The piping is usually constructed in a manner which does not allow a leak detector to be easily installed or which does not have valves, etc. by which isolation can be achieved to conduct tightness testing. As a result, some airport tank system owners have elected to excavate this usually shallow,

pressurized piping resulting in the entire piping run being aboveground between both tank systems. This can eliminate all release detection requirements for piping. See Appendix 3.

Corrosion protection (CP) is only a concern if this same piping has not been proven to be continuous with any CP system which may be installed at the site. Also, sections of the piping may be isolated due to dielectric unions or gaskets associated with transfer pumps. Since this piping is regulated, then continuity must be established for the entire run of the piping. If continuous, then the appropriate CP testing of this piping must be included with all other tank system component testing. If not continuous, then CP must be added to this piping in accordance with rule .02(4)(b) or the piping must be excavated to qualify as aboveground piping as previously described and thus not regulated.

2. Piping associated with fuel transfer: Some airports may have piping which allows fuel to be transferred from one system to another or piping from a remote fill or fuel loading area to and from a particular tank system. This fuel loading area may include remote fill ports as well as offloading piping.

These pipes may be gravity/suction flow, pressurized, or a combination of both. This piping may be completely underground, all above ground, or just partially underground. The piping may have a transfer pump anywhere along the run of the piping. As a result, the piping run may be partially suction and then either pressurized or gravity flow beyond the transfer pump.

First determine if the piping is pressurized. If pressurized, then release detection is required for the underground portions. The same solutions described above for "Piping associated with other tank systems" may be applied. Note: if transfer pumps allow fuel to be contained in the suction portion of the piping and will not drain back into the tank, then release detection for this portion of the piping is required according to rule .04(2)(b)2. Again, since this is very impractical to implement in these type systems, the usual alternative is to excavate the section of piping to the top of the tank which will eliminate all release detection requirements since the piping will be considered aboveground.

In addition, the same corrosion issue solutions described above for "Piping associated with other tank systems" may be applied for the underground portions.

3. Specific CP issues: Some tank farm systems requiring CP have been found to be tested and reported along with the airport's AST and associated "hydrant system" piping (which delivers fuel directly to aircraft at the gate area). Sometimes their respective CP systems may be separate, and sometimes combined. If any other tank systems are protected by the same CP system, then the Division regulated UST systems should be tested and reported separately on the applicable Division required forms (CN-1309 and CN-1282). See rules .02(4)(c)2. and .02(4)(c)4.

Occasionally, unregulated tanks may be included in the same CP system protection as regulated tanks. These may include tanks such as the glycol tanks previously mentioned. This does not create a CP issue as

long as these unregulated tanks are properly maintained and do not adversely affect the protection of the CP system for the regulated tanks.

Example Piping Configuration

Example Fuel Farm with USTs and ASTs

Example Piping Configuration

Curbside Fuel Loading/Offloading

Example Transfer Pump

Inspection tips: It is important to not allow the confusing aboveground/underground piping configurations at these tank farms to cause a misinterpretation of the compliance/non-compliance of each system component. Before inspecting to determine what is in compliance or not:

1. First, ask questions to fully understand what the function of each component of the system(s) is and clearly distinguish what piping is associated with which tank (including transfer pumps and other ancillary equipment if present).

2. Completely map the tank farm and label each component.

3. Correctly label fuel flow direction of each visible pipe run.

4. Determine what section of piping is pressurized, gravity flow, or suction and then label it.

5. Thoroughly photograph each tank system and associated piping separately (and any other notable components or features) for future reference.

6. Finally, review all notes with the owner/operator for accuracy before beginning inspection.

These documents should be scanned and uploaded to the compliance database in Application Express for assistance with future inspections of the facility. If there are any concerns or questions upon completion of the inspection, refer for peer review.

BULK TERMINALS

Bulk Terminals are facilities that store large quantities of petroleum products usually in several large ASTs. Various petroleum products may be delivered to the facility by tanker trucks, barges, or pipelines and distributed to smaller facilities by transferring the fuel to tanker trucks. These facilities are also referred to as Fuel Terminals, Bulk Plants, onshore Major Oil Storage Facilities (MOSF) or Bulk Petroleum Storage

Terminals. Occasionally some USTs may be associated with these facilities. These facilities may be used by local or regional fuel distributors, environmental abatement companies storing used or waste petroleum products, or major fuel distributors.

Some inspection related concerns could include:

1. Tank and piping configuration - Although not usually as complicated as airport fuel farms, some of these facilities may have piping configurations that still require a more thorough investigation to determine compliance issues. Various configurations with a combination of above and underground piping may be observed as well as transfer pumps and filter canisters. The configuration usually includes a loading rack and sometimes typical dispenser(s).

2. Temporary Holding Tanks - Facilities often have holding tanks that are used to temporarily store petroleum products returned to the facility by a tanker truck. The product is later pumped back into the large storage tanks. If this temporary holding tank is "expeditiously emptied", then the tank is not regulated by the Division. The inspector must determine if the tank meets the requirements of "expeditiously emptied" in accordance with rule .01(2)(b)9.

Apply the same "Inspection tips" as detailed above for airport facilities.

Example Tank Configuration at a Bulk Terminal

APPENDIX 1

Tennessee Department of Environment and Conservation
Division of Underground Storage Tanks

Office of the Director

Regulatory Interpretive Memo

DATE: May 9, 2005

TO: All UST Division Staff

FROM: Stanley R. Boyd

SUBJECT: Oil/ Water Separator Holding Tanks

QUESTION: Is a separate holding tank used to collect and store waste oil or petroleum-containing wastes discharged from an oil/ water separator a regulated tank?

SCOPE OF THIS DISCUSSION

Oil/ water separators are deferred from Tennessee UST regulations, except rule 1200-1-15-.06, Release Response and Corrective Action because they are considered wastewater treatment tanks. Rule 1200-1-15-.01(1)(b)1 is consistent with the federal deferral for wastewater treatment tanks in 40 CFR 280.

Some oil/ water separators may use a separate tank to store lighter hydrocarbons which are separated from wastewater as they go through the separation process. Below is an illustration of an oil/ water separator with a separate holding tank.

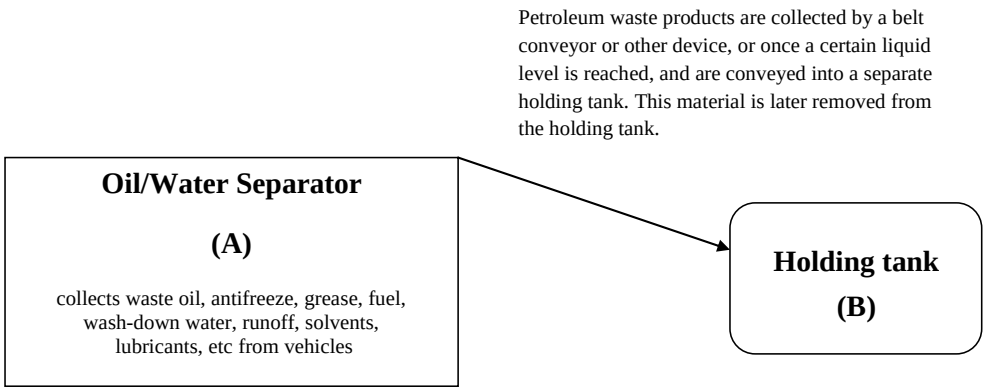

Since the separate holding tank (B) contains a mixture of more than a *de minimis* concentration of petroleum substances and is not involved in oil/ water separation, tank (B) is not deferred under Rule 1200-1-15-.01(1)(b)1. as a wastewater treatment tank. The proper classification for tank (B) in this illustration is waste oil tank. Waste oil tanks are regulated tanks, subject to all regulated tank requirements except spill and overfill prevention according to Rule 1200-1-15-.02(1)(c)2.(ii) as long as tank (B) is 110 gallons or more.

If you have any questions about this, contact Lamar Bradley at 615-532-0952.

APPENDIX 2

Tennessee Department of Environment and Conservation
Division of Underground Storage Tanks

Office of the Director

Statutory / Regulatory Interpretation Memo

DATE: **July 20, 2001**

TO: **All UST Division Staff**

FROM: **Wayne Gregory**

SUBJECT: **Dual Purpose Tanks**

QUESTION:

Are dual purpose tanks:

(1) exempted from UST law and regulations as heating oil tanks

or

(2) regulated as emergency generator tanks?

SCOPE OF THIS INTERPRETATION

For the purpose of this interpretation, "dual purpose tank" refers to a tank which is used for the production of heat *and* used for the generation of power in a power-outage emergency.

APPLICABLE LAWS AND REGULATIONS

Shown below is a comparison of language in the federal regulations (40 CFR 280) with the same or similar language in the Tennessee state law (TCA 68-215-101 *et seq.*) or in the Tennessee Regulations Governing Petroleum Underground Storage Tanks (Rule 1200-1-15).

Deferrals

40 CFR 280.10 (d) Deferrals. Subpart D does not apply to any UST system that stores fuel solely for use by emergency power generators.

Rule 1200-1-15-.01(1)(c) Deferrals. Rule 1200-1-15-.04 does not apply to any UST system that stores fuel solely for use by emergency power generators.

Heating Oil

40 CFR 280.12

"Heating oil" means petroleum that is No. 1, No. 2, No. 4 – light, No. 4 – heavy, No. 5 – light, No. 5 – heavy, and No. 6 technical grades of fuel oil; other residual fuel oils (including Navy Special Fuel Oil and Bunker C); and other fuels when used as substitutes for one of these fuel oils. Heating oil is typically used in the operation of heating equipment, boilers, or furnaces.

Rule 1200-1-15-.01(3)(y)

"Heating oil" means petroleum that is No. 1, No. 2, No. 4 – light, No. 4 – heavy, No. 5 – light, No. 5 – heavy, and No. 6 technical grades of fuel oil; other residual fuel oils (including Navy Special Fuel Oil and Bunker C); and other fuels when used as substitutes for one of these fuel oils. Heating oil is typically used in the operation of heating equipment, boilers, or furnaces.

On the premises where stored

40 CFR 280.12

"On the premises where stored" with respect to heating oil means UST systems located on the same property where the stored heating oil is used.

Rule 1200-1-15-.01(1)(ff)

"On the premises where stored" with respect to heating oil means UST systems located on the same property where the stored heating oil is used.

Exemptions and Underground storage tank definition

40 CFR 280.12 (Also, there is comparable language under "Definitions and exemptions" in US Code : Title 42, Section 6991 (1).)

"Underground storage tank" or "UST" means any one or combination of tanks (including underground pipes connected thereto) that is used to contain an accumulation of regulated substances, and the volume of which (including the volume of underground pipes connected thereto) is 10 percent or more beneath the surface of the ground. This term does not include any:

(b) Tank used for storing heating oil for consumptive use on the premises where stored.

TCA 68-215-124. Exemptions. --- Exempted from the provision of this chapter are:

(3) Tanks used for storing heating oil for consumption on the premises where stored;

Rule 1200-1-15-.01(3)(bbb)

"Underground storage tank" or "UST" means any one or combination of tanks (including underground pipes connected thereto) that is used to contain an accumulation of petroleum, and the volume of which (including the volume of underground pipes connected thereto) is ten percent (10%) or more beneath the surface of the ground. This term does not include any:

(b) Tank used for storing heating oil for consumption on the premises where stored;

As can be seen in the comparison above, the Tennessee state statute and regulations are no less stringent than the federal requirements.

Discussion

The preamble to the Federal regulations contains a discussion of the rulemaking rationale and some of the responses to public comments incorporated into the final federal rule. The preamble states that the only restriction placed upon usage, relative to heating oil tanks, is that the substance be used on site. However, further discussion lists examples of usage, including usage in boilers, furnaces, steam production and for the operation of heating equipment, the production of process heat and other heating purposes. Even the production of electricity and the powering of a generator are included if "heating oil" is the substance.

The federal rule itself defines "heating oil":

"Heating oil" means petroleum that is No. 1, No. 2, No. 4 – light, No. 4 – heavy, No. 5 – light, No. 5 – heavy, and No. 6 technical grades of fuel oil: other residual fuel oils (including Navy Special Fuel Oil and Bunker C): and other fuels when used as substitutes for one of these fuel oils. Heating oil is typically used in the operation of heating equipment, boilers, or furnaces.

As can be seen in this definition, substitutes for the listed substances are included in the definition of heating oil. When a substitute, such as diesel, kerosene, or even used oil, is used to fuel heating equipment such as boilers or furnaces, it is a heating oil by definition. The only other restriction which must be considered is

whether or not the fuel is used or consumed on the same property on which the underground storage tanks are located. A more detailed analysis of the substances and/or usages which qualify for the heating oil tank exemption is outlined in the table below.

In this analysis the following has been derived from the discussion of the Federal rule, in the preamble, as well as from the rule itself:

The following qualify for the heating oil exclusion:	
Petroleum sold as:	**Usage:**
No. 1 Fuel Oil	Any *
No. 2 Fuel Oil	Any *
No. 4 – Light Fuel Oil	Any *
No. 4 – Heavy Fuel Oil	Any *
No. 5 – Light Fuel Oil	Any *
No. 5 – Heavy Fuel Oil	Any *
No. 6 Fuel Oil	Any *
Navy Special	Any *
Bunker C	Any *
Substitutes for one of the fuel oils listed above, such as diesel, kerosene and used oil	Boilers
Substitutes for one of the fuel oils listed above, such as diesel, kerosene and used oil	Furnaces
Substitutes for one of the fuel oils listed above, such as diesel, kerosene and used oil	Operation of heating equipment
Substitutes for one of the fuel oils listed above, such as diesel, kerosene and used oil	Steam production
Substitutes for one of the fuel oils listed above, such as diesel, kerosene and used oil	Production of process heat
Substitutes for one of the fuel oils listed above, such as diesel, kerosene and used oil	Any other heating purpose

* "Any" includes the production of electricity and powering a motor generator. "Any" does not include product stored for resale, marketing or distribution because the "heating oil" must be consumed on the premises where stored.

Tennessee statute exempts certain tanks from **all** provisions of the Petroleum Underground Storage Tank Act in TCA 68-215-124. Tanks used for storing heating oil for consumption on the premises where stored are exempted. This statute has been in effect since July 1, 1988. The Tennessee regulation which defers UST systems that store fuel solely for use by emergency power generators from release detection requirements took effect in August of 1991. Tennessee regulations also state, in Rule 1200-1-15-.01(3)(aaa)2, that heating oil tanks are **not** underground storage tanks by definition.

Since, in the hierarchy of legal authority or strength, a statute is the higher authority and "out-ranks" a regulation, the position adopted here is that if and when a tank qualifies in any way for the heating oil exemption, that statutory exemption overrides a regulatory deferral. A regulatory deferral can only be applicable to a regulated tank. If a tank qualifies for a statutory exemption, it is not a regulated tank and therefore cannot be evaluated for a regulatory deferral. The legal hierarchy appears to be exactly the same in the Federal and the Tennessee requirements. This position is supported by the regulatory definition of an underground storage tank, which specifically states that the term "underground storage tank" does not include tanks used for storing heating oil for consumption on the premises where stored (Tennessee Rule 1200-1-15-.01(3)(bbb)2).

Another focus of this analysis is the distinction which can be observed in the statutory and regulatory language used relative to heating oil tanks verses that language used relative to emergency power generator tanks. The word "**solely**" is used in the language deferring emergency power generator tanks from the release detection requirements. No such limiting language is used relative to heating oil tanks. This comparison leads to the conclusion that heating oil tanks are exempted from the UST requirements even if the tank has other functions in addition to or as well as fueling boilers or furnaces, as long as the heating oil is consumed on the premises where stored. However, an emergency power generator deferral is applicable to tanks that **only or solely** serve as emergency power generator tanks. It can be concluded that the deferral does not apply to dual purpose tanks (heating oil and emergency power generator), but that the stronger statutory exemption does. If the authors of the Federal and the Tennessee law had intended to limit the heating oil exemption to tanks which were "solely" heating oil tanks, then language similar to that written for tanks used to fuel emergency power generators would have been written for heating oil tanks as well. It was not.

If we were to assume, just for the sake of argument, that the same weight were given to the statutory exemption of heating oil tanks and the regulatory deferral of emergency power generator tanks, then because of the use of the word "solely", dual purpose tanks could not qualify for the emergency power generator deferral from regulatory release detection requirements. The impact of this would have to be one of two

outcomes: (1) dual purpose tanks do qualify for the heating oil tank exemption or (2) dual purpose tanks are fully regulated and must perform release detection in accordance with state and federal regulations. There is nothing in the Tennessee nor in the Federal rules which suggests that tanks used for both heating purposes and emergency power generation are required to perform release detection. Therefore, the first outcome mentioned above, that dual purpose tanks do qualify for the heating oil tank exemption, must be the conclusion reached.

In most, if not all, of the contested case hearings before the Tennessee Petroleum Underground Storage Tank Board, the Administrative Law Judge admonishes the Board to consider the plain meaning of the words used in the law and the regulations. When looking at the plain meaning of Tennessee law and regulations, heating oil tanks are not regulated. Heating oil tanks are exempted by law from any and all provisions of the Tennessee Underground Storage Tank Act and therefore from the regulations promulgated pursuant to the Act. Heating oil tanks are not considered, by regulatory definition, to be underground storage tanks. Finally, heating oil is defined by rule. This definition includes substitutes for the listed fuel oils as well as those listed fuel oils. Therefore, if a tank stores a petroleum product which is used or consumed on the same property where the storage tank is located, and the petroleum product is used to produce heat or is listed in the regulatory definition of "heating oil", the tank is exempt from all requirements set forth in the Tennessee Underground Storage Tank Law and Regulations. This applies to all such tanks regardless of other functions, such as providing fuel for powering a generator during a power-outage emergency.

CONCLUSION

Dual purpose tanks are exempt from UST law and regulations if:

(1) one of the petroleum products listed in the definition of heating oil is stored in the tank;

or

(2) the tank is used to operate boilers, furnaces, heating equipment or to produce steam, process heat or for any other heating purpose using a petroleum product not specifically listed in the regulatory definition of heating oil.

APPENDIX 3

Tennessee Department of Environment and Conservation
Division of Underground Storage Tanks
Office of the Director

Statutory/Regulatory Interpretive Memo

DATE: November 26, 2001

TO: All UST Division Staff

FROM: Wayne Gregory

SUBJECT: Release Detection Requirements for Aboveground Piping

QUESTION:

Do the regulations require aboveground piping, connected to an underground storage tank, to be provided with a method of release detection?

SCOPE OF THIS DISCUSSION

In some locations, such as airport fuel farms, there are tank and piping configurations which include aboveground piping runs. The focus of this discussion is those piping runs, whether fill piping which conveys product to a tank, delivery piping which dispenses product from a tank or piping which connects two or more tanks together, which are totally aboveground.

APPLICABLE TENNESSEE PETROLEUM UNDERGROUND STORAGE TANK REGULATIONS

1200-1-15-.01(3)

(mm) ``Petroleum UST system" means an underground storage tank system that

contains petroleum or a mixture of petroleum with de minimis quantities of other hazardous

substances. Such systems include those containing motor fuels, jet fuels, distillate fuel oils, residual fuel oils, lubricants, petroleum solvents, and used oils.

(aaa) ``Underground storage tank'' or ``UST'' means any one or combination of tanks (including underground pipes connected thereto) that is used to contain an accumulation of petroleum, and the volume of which (including the volume of underground pipes connected thereto) is 10 percent or more beneath the surface of the ground. This term does not include any: ….

(ddd) ``UST system'' or ``Tank system'' means an underground storage tank, connected underground piping, underground ancillary equipment, and containment system, if any.

1200-1-15-.04 RELEASE DETECTION.

(1) General requirements for release detection.

(a) Owners and/or operators of new and existing UST systems must provide a method, or combination of methods, of release detection that:

1. Can detect a release from any portion of the tank and the connected underground piping that routinely contains petroleum;

(2) Requirements for petroleum UST systems.

Owners and operators of petroleum UST systems shall provide release detection for tanks and piping as follows:

(b) Piping. Underground piping that routinely contains petroleum must be monitored for releases in a manner that meets one of the following requirements:

DISCUSSION & ANALYSIS

The release detection requirements for piping are found in rule 1200-1-15-.04. In subparagraph (1)(a) the term UST system is used, so we must look at the definition of "UST system" contained in rule 1200-1-15-.01(3)(ddd). The definition includes "connected underground piping"; relevant to this discussion is the word "underground". Aboveground piping is not included in this definition. Both part (1)(a)1 and subparagraph (2)(b) of rule 1200-1-15-.04 contain the words "underground piping", but not the words "aboveground piping".

While there are several regulatory references to underground piping, no regulations could be found which require release detection for piping which is totally aboveground. Therefore, it can be concluded that aboveground piping connected to an underground tank is not required by regulation to be provided with a method of release detection.

For combination piping runs, which contain both aboveground and underground piping, the requirements are those which apply to underground piping.

CONCLUSION

Piping associated with an UST which is totally aboveground is not required by rule to be provided with release detection.