INTERCHANGE MODIFICATION STUDY

Interstate 65
at
State Route 248
Williamson County

PREPARED BY
SAIN ASSOCIATES, INC.

FOR
THE TENNESSEE DEPARTMENT OF TRANSPORTATION
PLANNING DIVISION

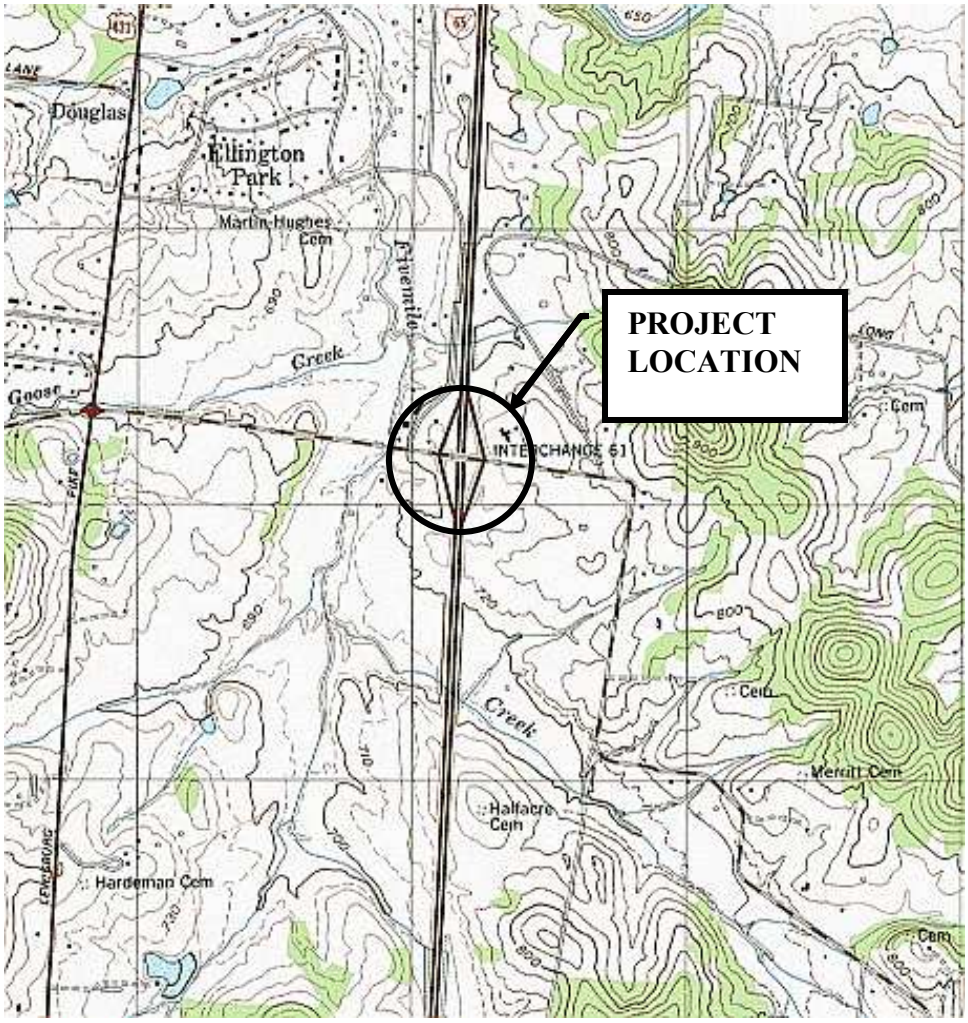

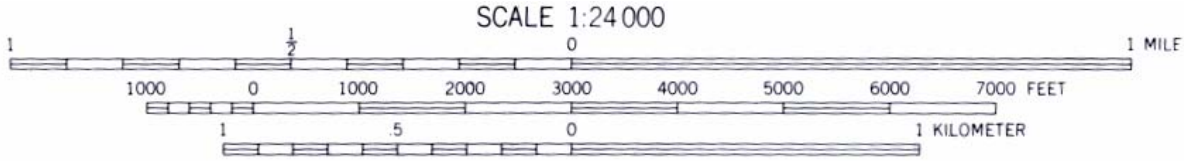

NORTH

BETHESDA, TENNESSEE
35086-E8-TF-024

Project Location Map

I-65 at State Route 248
Williamson County

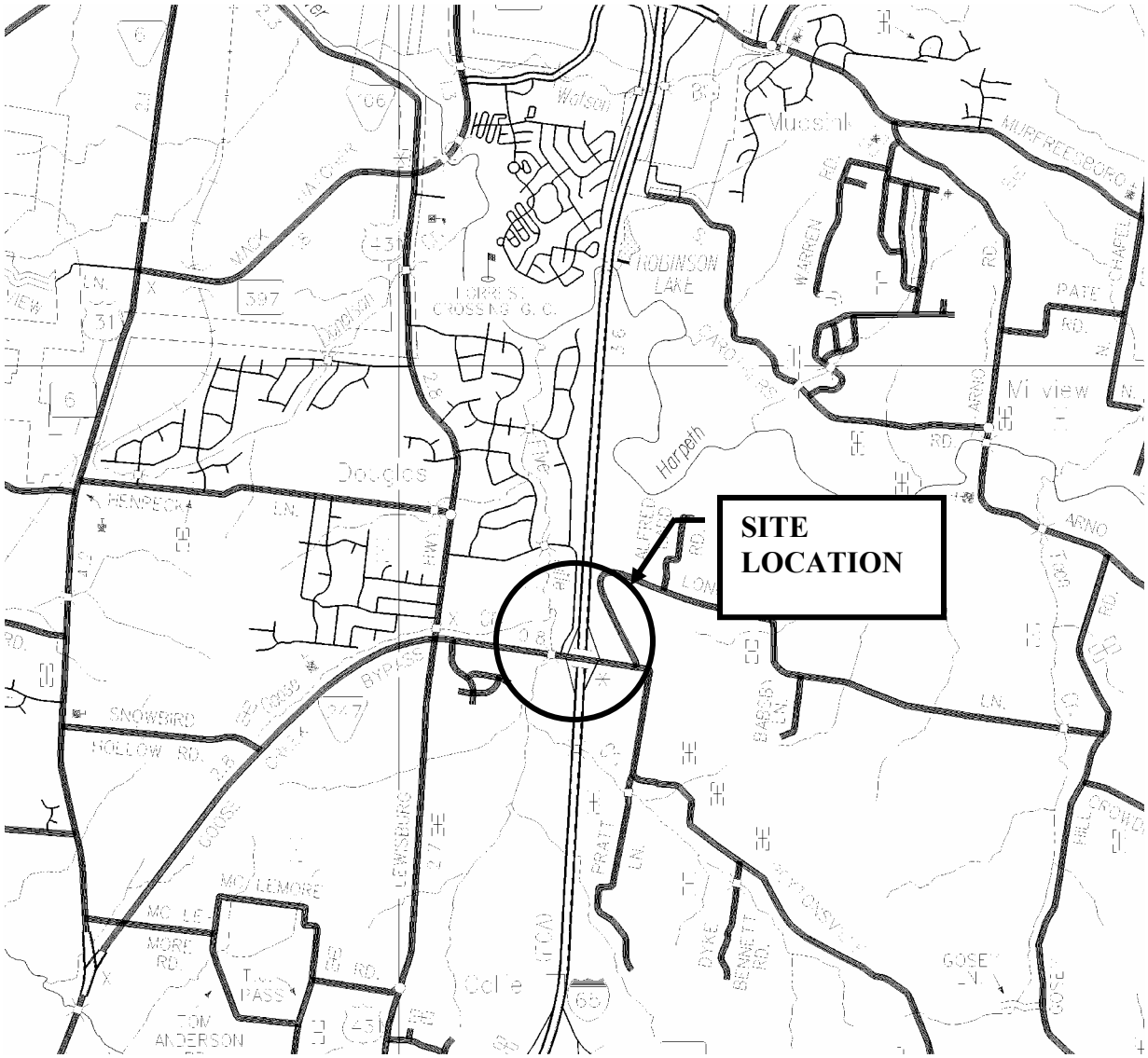

Scale: 1" = 1 Mile

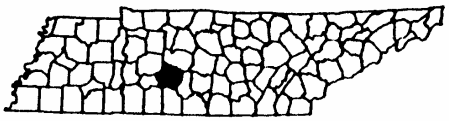

NORTH

Project Area Map

I-65 at State Route 248
Williamson County

TABLE OF CONTENTS

Item **Page**

Chapter 1. Introduction
A. Study Purpose and Scope 1-3
B. Description of the Area 1-4
C. Relationship to Other Highway Improvement Plans and Programs 1-5

Chapter 2. Preliminary Planning Data
A. Land Use 2-1
B. Traffic Served 2-1
C. Proposed Improvements 2-4
D. Discussion of Alternatives 2-6
E. Environmental Concerns 2-7

Chapter 3. Engineering Investigation
A. Traffic Operations 3-1
B. Access Analysis 3-2
C. Cost 3-5

Chapter 4. Summary and Conclusions 4-1

Maps

Project Location Map 1-1
Project Area Map 1-2

Appendix

Traffic Volumes
Figure 1 – 2008 AM Design Hour Volumes
Figure 2 – 2008 PM Design Hour Volumes
Figure 3 – 2028 AM Design Hour Volumes
Figure 4 – 2028 PM Design Hour Volumes
Considered Alternates
Functional Plans
Cost Estimate Worksheets
I-65 at SR 248 Interchange Capacity Analyses
Crash Rate Calculations

Chapter 1

INTRODUCTION

Chapter 1. INTRODUCTION

A. Study Purpose and Scope

The purpose of this study is to provide a detailed evaluation in response to a request by the Tennessee Department of Transportation for modifications to the existing interchange at Interstate 65 and State Route 248 (Goose Creek Bypass) in the City of Franklin and Williamson County. The subject interchange has a diamond type ramp configuration. State Route 248 is a two-lane roadway, classified as a major arterial from Interstate 65 to the west and a minor collector east of Interstate 65. The interchange is situated in the southern edge of Franklin's urban growth boundary and is considered the southern gateway to the City of Franklin.

The recommended plan for this interchange proposes construction of an improved diamond interchange in order to mitigate existing operational deficiencies as well as provide sufficient capacity for future growth in traffic. The Long Range Transportation Plan includes two projects that impact the interchange, widening of State Route 248 and widening of I-65.

The factors considered in the modification study for this interchange are traffic operations, right-of-way requirements, construction cost, land use impacts and possible environmental concerns.

This study was initiated by the Tennessee Department of Transportation based upon concerns regarding future growth in the Goose Creek area and its impact on traffic operations. Several large tracts of land in the vicinity of the interchange are in the development review process with the City of Franklin. Specifically, a project called "Berry Farms Mixed Use Development" is planned to be constructed in phases over the next 10-20 years on land tracts that border the northwest, southwest, and southeast quadrants of the I-65 and State Route 248 interchange. The Berry Farms development alone will substantially increase traffic demand on State Route 248. Existing traffic on State Route 248 exceeds the capacity of the existing interchange, and general growth, aside from Berry Farms, will contribute to further operational decline in the future if an improvement to the interchange is not undertaken.

Improvement of the interchange and widening of State Route 248 and Interstate 65 are reflected in the Long Range Transportation Plan (LRTP). Specifically, the LRTP calls for:

- widening of I-65 from 4 to 8 lanes from State Route 96 to State Route 840, and
- widening State Route 248 from 2 lanes to 4 lanes with a median between Lewisburg Pike and I-65.

A review of the crash history at this interchange revealed higher than average crash rates at both ramp terminal intersections and on mainline I-65. The table below summarizes the calculated rates for the three year period from 1999 through 2001. An explanation of the different rate calculations follows the summary table.

Traffic Crash Rates
1999-2001

Location	Statewide Average	Crash Rates			
		Actual Rate	Critical Rate	Actual/Critical Rate	Severity Index
SR 248 from Bridge over Five Mile Creek to Truck Stop Driveway	1.77	5.91	3.30	1.79	0.21
I-65 @ SR 248 Interchange	0.45	1.26	0.78	1.62	0.25

The actual traffic crash rate is determined by dividing the number of crashes that occur at a given location in a specified time period by the amount of vehicular exposure at that location. Exposure is measured in number of vehicle-miles of travel or in number of entering vehicles. Statewide averages for crash rates on comparable roadway segments are provided in the table for comparison. The critical crash rate reflects a statistical control that provides a means of evaluating actual crash rates. If an actual crash rate is higher than the critical rate, one can conclude that the crash pattern is most likely not due to chance but to some unfavorable characteristic of the local conditions. The severity index is an expression of the ratio of fatal and injury crashes to the total number of crashes at a given location. The higher the severity index, the more hazardous the location.

The calculated crash rates for the I-65 and State Route 248 interchange support the conclusion that deficient roadway geometry is contributing to the pattern of traffic crashes.

B. Description of the Area

The I-65 and State Route 248 interchange is located in central Williamson County on the southern edge of the City of Franklin's Urban Growth Boundary in an area known as Goose Creek. Both the City of Franklin and Williamson County have experienced significant population growth in the last decade. According to the U.S. Census Bureau, the population in Williamson County increased by 56.3% from 1990 to 2000. More significantly, the population in Franklin increased by 108% from 1990 to 2000.

U.S. Census Population Trends

Year	City of Franklin	Williamson County
1980	12,407	58,108
1990	20,098	81,021
2000	41,842	126,638

Franklin's Urban Growth Boundary is expanding to the south where real estate developers are proposing substantial residential and commercial development projects. The interchange of I-65 and State Route 248 is situated in the center of several large land tracts that have been purchased for a mixed-use development known as Berry Farms. The Berry Farms project is expected to be constructed in phases over the next 10-20 years. The growth in traffic associated with increased development and population trends in the Goose Creek area necessitate improvements to the transportation infrastructure in order to accommodate the mobility and safety needs of the public.

Existing land uses immediately adjacent to the I-65 and State Route 248 interchange include undeveloped agricultural land, gas stations, a truck stop, and miscellaneous commercial businesses. The Goose Creek Small Area Plan calls for future land uses consistent with a commercial activity center and mixed-use development (residential and commercial). The Small Area Plan envisions that the State Route 248 interchange provides a major regional economic development opportunity for the City of Franklin and would serve as a future gateway to the City.

The closest interchanges to the north and south on I-65 are located at State Route 96 which is approximately 4.2 miles to the north, and at State Route 840 which is approximately 2.7 miles to the south.

C. Relationship to Other Highway Improvement Plans and Programs

The Long Range Transportation Plan includes two transportation projects in the vicinity of the I-65 and State Route 248 interchange. These projects are summarized in the table below.

Long Range Transportation Plan Improvement Projects

Roadway	From	To	Project
Interstate 65	State Route 96	State Route 840	Widen from 4 to 8 lanes
SR 248 (Goose Creek Bypass)	Lewisburg Pike	I-65	Widen from 2 lanes to a 4-lane median divided facility with bike lanes

Chapter 2

PRELIMINARY PLANNING DATA

Chapter 2. PRELIMINARY PLANNING DATA

A. Land Use

The existing land use in the study area is primarily commercial and agricultural. The commercial land uses include gas stations, a truck stop and miscellaneous commercial businesses.

B. Traffic Served

Traffic volume estimates for this evaluation were prepared with data provided by the development team for Berry Farms. They include existing traffic counts, general area growth, and trips expected to be generated by the Berry Farms development.

Interstate 65 is presently (2005) a four-lane freeway with an anticipated year 2008 peak hour traffic volume of approximately 7,620 vehicles north of SR 248 (7,300 in the a.m. peak hour and 7,930 in the p.m. peak hour) and approximately 6,570 vehicles in the peak hour south of SR 248 (6,250 a.m. / 6,880 p.m.). By the design year 2028 these peak hour volumes are expected to increase to approximately 11,150 north of SR 248 (10,560 a.m. / 11,750 p.m.) and approximately 9,460 south of SR 248 (8,900 a.m. / 10,020 p.m.).

SR 248 is a two-lane major arterial roadway with an anticipated year 2008 peak hour volume of approximately 2,500 vehicles (2,150 a.m. / 2,930 p.m.) west of I-65 and approximately 1,600 east of I-65 (1,270 a.m. / 1,900 p.m.). By the design year 2028 these peak hour volumes are expected to increase to approximately 4,500 west of I-65 (3,680 a.m. / 5,220 p.m.) and approximately 2,900 east of I-65 (2,260 a.m. / 3,520 p.m.)

Present and projected design hour traffic volumes (DHV) are shown in the Appendix.

With the existing four travel lanes, peak direction levels of service on I-65 north of State Route 248 are “F” / “F” (northbound a.m. / southbound p.m.) for year 2008 design hour volumes and “F” / “F” (northbound a.m. / southbound p.m.) for year 2028 volumes. On I-65 south of State Route 248, the levels of service for peak direction design hour volumes are also “F” / “F” (northbound a.m. / southbound p.m.) for year 2008 and 2028.

Levels of service at the ramp terminal intersections with State Route 248 are either “E” or “F” with present-day geometry and year 2008 traffic volumes. With year 2028 volumes, all movements at these intersections operate at level of service “F”. The deficiencies are caused by extremely high traffic volumes with insufficient turn lanes and inadequate signalization.

In addition to the intersection deficiencies at the ramp terminals, there are deficiencies at the ramp merge and diverge areas along I-65. Operational deficiencies at the ramp merge and diverge points are primarily affected by heavy traffic volumes on I-65. In addition, the existing acceleration and deceleration lengths are short and do not meet current design standards. Traffic exiting at the southbound ramp routinely backs up onto mainline I-65. These acceleration and deceleration lanes need to be lengthened

and additional lanes are needed on all ramps to accommodate increasing traffic volumes on State Route 248.

Capacity Analysis Results with Existing Geometry
I-65 @ State Route 248

Freeway Segment	2008		2028	
	AM DHV	PM DHV	AM DHV	PM DHV
SR 840 to SR 248 (south of SR 248)				
I-65 Northbound	F	C	F	F
I-65 Southbound	C	F	C	F
SR 248 to SR 96 (north of SR 248)				
I-65 Northbound	F	E	F	F
I-65 Southbound	C	F	E	F

Ramp Diverge	2008		2028	
	AM DHV	PM DHV	AM DHV	PM DHV
I-65 @ Northbound Exit Ramp	F	C	F	D
I-65 @ Southbound Exit Ramp	C	F	D	F
Ramp Merge				
I-65 @ Northbound Entrance Ramp	F	D	F	F
I-65 @ Southbound Entrance Ramp	C	F	D	F

Ramp Intersection (stop sign control)	Approach & Movement	2008		2028	
		AM DHV	PM DHV	AM DHV	PM DHV
SR 248 @ I-65 NB Ramps	Eastbound left	E	F	F	F
	Northbound left/right	F	F	F	F

Ramp Intersection (signal control)	Approach	2008		2028	
		AM DHV	PM DHV	AM DHV	PM DHV
SR 248 @ I-65 SB Ramps	Eastbound	F	F	F	F
	Westbound	E	F	F	F
	Southbound	F	F	F	F

The recommended proposed modification to the interchange would maintain the existing diamond configuration but add capacity through additional travel lanes. The plan calls for widening all ramps to provide dual left turn lanes or dual receiver lanes. Separate right turn lanes are also recommended at each ramp terminal on State Route 248. Signalization is proposed for both ramp intersections with an urban diamond phasing pattern. The recommended plan assumes widening of I-65 to an 8-lane freeway from State Route 96 to State Route 840, as is stated in the Franklin Major Thoroughfare Plan Update.

Traffic operations with the improved diamond plan were analyzed with three traffic analysis software packages: Highway Capacity Software (HCS), Synchro/SimTraffic, and CORSIM. Levels of service from HCS and Synchro are shown in the following table. Printouts of all capacity analyses and levels of service are included in the Appendix. Intersection levels of service for the 2028 morning design hour are significantly improved with the upgraded diamond configuration. Levels of service for the 2028 afternoon design hour are “E” and “F” for the northbound and southbound

intersections, respectively. While not ideal, these levels of service are reflective of improved operations when compared to existing conditions.

Levels of service on the entrance and exit ramps improve significantly with the recommended plan. The only deficient ramp merge or diverge levels of service with the recommended plan are at the northbound entrance ramp merge area during the morning peak hour and at the southbound exit ramp diverge area during the afternoon peak hour. Levels of service at these ramps are constrained by mainline I-65.

Capacity Analysis Results with Recommended Geometry
I-65 @ State Route 248

Freeway Segment	2028	
	AM DHV	PM DHV
SR 840 to SR 248 (south of SR 248)		
I-65 Northbound – south of SR 248	E*	C
I-65 Southbound – south of SR 248	B	E*
SR 248 to SR 96 (north of SR 248)		
I-65 Northbound – north of SR 248	F**	C
I-65 Southbound – north of SR 248	B	F***

* LOS E is reached by 2023.
** LOS E is reached by 2016.
*** LOS E is reached by 2018.

Ramp Diverge	2028	
	AM DHV	PM DHV
I-65 @ Northbound Exit Ramp	A	A
I-65 @ Southbound Exit Ramp	A	F*
Ramp Merge		
I-65 @ Northbound Entrance Ramp	F*	A
I-65 @ Southbound Entrance Ramp	A	A

*Ramp fails due to mainline freeway failure.

Improved Diamond Interchange

Ramp Intersection (signal control)	Approach & Movement	2028	
		AM DHV	PM DHV
SR 248 @ I-65 Northbound Ramps	Eastbound	A	B
	Westbound	E	F
	Northbound	E	F
	Intersection Average	C	E
SR 248 @ I-65 Southbound Ramps	Eastbound	A	C
	Westbound	B	D
	Southbound	D	F
	Intersection Average	C	F

A detailed CORSIM simulation model was developed to assess traffic operations with the upgraded diamond plan versus two other considered alternate plans which included a single point urban interchange (SPUI) and a modified diamond with a loop ramp. (These alternate configurations are described in more detail in a later section of this report. Refer to the “Discussion of Alternatives” section.) Three measures of effectiveness were recorded for each interchange configuration: average travel time,

average network speed, and total network delay. The results of the CORSIM models are summarized in the following table. The simulation models showed the best performance measures for the diamond with loop ramp plan. The loop plan was removed from further consideration, however, because its greater right-of-way impacts make it impractical compared to the other two concepts. The traffic operational effectiveness of the diamond and SPUI plans were closely comparable, with slightly better results for the diamond configuration.

CORSIM Measures of Effectiveness Comparison

AM Design Hour

MOE	Interchange Alternative		
	Diamond	**SPUI**	**Loop**
Average Travel Time (sec/veh)			
*Eastbound SR-248 **	59	66	63
*Westbound SR-248 **	96	103	58
Average Network Speed (mph)	45	46	47
Total Network Delay (veh-hr)	124	126	95

* average travel times measured between traffic signals adjacent to I-65 ramps

PM Design Hour

MOE	Interchange Alternative		
	Diamond	**SPUI**	**Loop**
Average Travel Time (sec/veh)			
*Eastbound SR-248 **	88	85	100
*Westbound SR-248 **	117	109	77
Average Network Speed (mph)	40	41	42
Total Network Delay (veh-hr)	200	215	178

* average travel times measured between traffic signals adjacent to I-65 ramps

C. Proposed Improvements

The scope of work for the proposed modification consists of the following items. Functional concept plans for the recommended modification are included as an attachment to this report.

Item 1: Construct a new bridge on State Route 248 to accommodate the improved diamond interchange. The bridge would consist of ten 12' lanes, striped as side-by-side dual left turn lanes and three through lanes in each direction. A 10' outside shoulder is proposed to accommodate bicycles. Shift the centerline alignment of State Route 248 toward the south to aid in construction of the new bridge. Staged construction is proposed for the bridge in order to maintain traffic flow.

Item 2: Construct a new bridge across Five Mile Creek, west of I-65 to accommodate the widened cross section on State Route 248. Staged construction is proposed in order to maintain traffic flow.

Item 3: Widen State Route 248 to provide six travel lanes plus auxiliary turn lanes and 10' shared-use shoulders through the interchange. On the west side of I-

65 extend the widened six-lane cross section across Five Mile Creek to the intersection of realigned Old Peytonsville Road and the first access driveway to the Berry Farms development. In order to limit access control along State Route 248, a raised median shall be provided as a minimum to the first cross street west of the ramp terminals. It is recommended that the outside travel lanes be dropped at the Old Peytonsville Road intersection and that only four travel lanes be continued to the west of the intersection. It is expected that a separate project will be undertaken by the City of Franklin or the Tennessee DOT to widen State Route 248 to a four-lane median divided cross section west of the relocated Old Peytonsville Road intersection, as described in the Long Range Transportation Plan.

On the eastern side of I-65, extend the six-lane cross section including a raised median for a distance of approximately 600 feet to a new intersection that will provide access to the TA Travel Center truck stop and a development parcel on the south side of State Route 248. Drop the outside travel lanes at this intersection, as well as the raised median, then moving eastward, taper the remaining lanes down to match the existing two-lane cross section. Create a right-angle intersection with a stop condition at Long Lane and provide a left-turn lane on State Route 248 at Long Lane.

Item 4: Install traffic signals at the ramp terminal intersections on State Route 248. Use an urban diamond-type phasing plan for the signals.

Item 5: Relocate a portion of Old Peytonsville Road away from I-65 to make room for widening and improvement of the southbound exit ramp and allow for extension of the controlled access area near the ramp terminals. Construct a cul-de-sac on Old Peytonsville Road to eliminate its existing intersection with State Route 248. In conjunction with the cul-de-sac, construct an extension of Old Peytonsville Road to the west across Five Mile Creek into the Berry Farms development property. The extended Old Peytonsville Road would then intersect State Route 248 west of Five Mile Creek. Additional right-of-way and a new bridge will be needed to accommodate the realignment of Old Peytonsville Road. The concept for extension of Old Peytonsville Road was coordinated with the City of Franklin and the Berry Farms developer.

Item 5: Widen each of the existing entrance and exit ramps to I-65. On the northbound ramps and on the southbound entry ramp, provide three travel lanes near the intersection with State Route 248 and taper to two lanes in the merge / diverge area. On the southbound exit ramp, construct four lanes near the intersection with State Route 248 and taper to two lanes for the merge / diverge area.

Item 6: Lengthen all of the ramp acceleration and deceleration lanes on I-65 to comply with current American Association of State Highway and Transportation Officials (AASHTO) standards.

Item 7: On the east side of I-65, extend the controlled access (CA) fencing along State Route 248 for a distance of approximately 600’ east of the existing CA

fence termini. Construct a new access road between the two truck stops east of I-65 to provide full traffic access to each property.

Item 8: On the west side of I-65, extend the CA fence along State Route 248 for a distance of approximately 900' west of the existing fence termini. This extension of access control will affect access to the existing Cone Gas Station and Mapco Express Gas Station properties, as well as to various businesses along Old Peytonsville Road. The extension of Old Peytonsville Road described in Item 5 is the recommended means for providing access to these properties in the future.

The recommended plan assumes widening of I-65 to eight travel lanes with a median barrier. The functional plans for the recommended concept illustrate the freeway widening, but it is not included in the cost estimates for this project.

D. Discussion of Alternatives

Three alternatives were considered in the evaluation of this interchange. The first alternative is to make no changes to the interchange. The existing interchange geometry is deficient in terms of intersection capacity and geometry. With no improvements, the ramp terminal intersections will exceed capacity by the year 2008 and the higher than average crash rates will continue. Increasing delays at this interchange will result in increased vehicle emissions, on-going safety concerns, and costs from lost productivity. For these reasons, the "no build" option was considered unacceptable.

The second alternative plan considered was a modification of the interchange to include a loop ramp in the southeast quadrant of the interchange in order to accommodate traffic traveling from eastbound State Route 248 to northbound I-65. With this plan, the remaining ramp termini were kept in the existing diamond configuration with additional turn lanes and signalization. This alternate plan yields levels of service that are slightly better than the recommended diamond plan but requires significantly more right-of-way. A single-line concept plan for the loop ramp alternate is included in the appendix of this report. The table below summarizes intersection levels of service that could be achieved with the loop ramp plan. This alternate was presented to representatives from the City of Franklin. After discussion of the performance measures of each alternate, the City's representatives indicated a reluctance to support an interchange option with the property impacts that the loop ramp option would create.

Capacity Analysis Results for 2nd Considered Alternate
(Two Signals with a Loop Ramp)

Ramp Intersection (signal control)	Approach	2028	
		AM DHV	PM DHV
SR 248 @ I-65 NB Ramps	Eastbound	A	A
	Westbound	A	A
	Northbound	D	D
	Intersection Average	C	B
SR 248 @ I-65 SB Ramps	Eastbound	A	E
	Westbound	B	D
	Southbound	D	F
	Intersection Average	C	E

The third alternate plan considered for this interchange was a single point urban interchange (SPUI) configuration. The studied plan included an eight-lane bridge over I-65 to provide opposing dual left turn lanes and three through lanes in each direction. A signalized intersection was included at the ramp terminals with signal control for dual right turn lanes on the southbound exit ramp. The ramps were assumed to be lengthened and widened to two or more lanes as was included in the recommended diamond concept. The SPUI alternative provides similar levels of service to the recommended diamond configuration. The following table summarizes intersection levels of service with the SPUI alternative. Functional concept plans and a cost estimate were developed for the SPUI interchange because it was identified as the preferred configuration by representatives from the City of Franklin. The concept plans and costs estimate are included in the appendix of this report. The SPUI was not selected as the recommended plan, however, due to higher construction costs.

Capacity Analysis Results for 3rd Considered Alternate
Single Point Urban Interchange

Ramp Intersection (signal control)	Approach	2028	
		AM DHV	PM DHV
SR 248 @ I-65 Ramps	Eastbound	B	C
	Westbound	D	F
	Northbound	D	F
	Southbound	D	F
	Intersection Average	C	E

E. Environmental Concerns

The recommended interchange modification has been routed to minimize impacts to environmentally sensitive areas associated with the gas stations located in the northwest and northeast quadrants. Environmental technical studies will be completed at a later date.

CHAPTER 3

ENGINEERING INVESTIGATION

Chapter 3. ENGINEERING INVESTIGATIONS

A. Traffic Operations

Analyses were made to determine what impacts the proposed modifications to the existing interchange would have on the interstate system. The traffic operation analyses contained in the appendices include basic freeway segments, ramp analyses, and intersection analyses.

According to the analyses, I-65 will reach maximum capacity as a four-lane freeway before the base year of 2008. There are deficiencies at the ramp merge and diverge areas along I-65 due to inadequate acceleration / deceleration lengths and heavy traffic volumes. Levels of service at the ramp terminal intersections with State Route 248 fail with present-day geometry and year 2008 traffic volumes. Traffic crash rates were calculated for State Route 248 and I-65 using crash records from 1999 through 2001. In each case the crash rates are higher than statewide averages.

The proposed modifications to the interchange will improve overall operations and will provide acceptable levels of service during the peak hours through the year 2028 with only a few exceptions. Exceptions include afternoon design hour operations at the ramp terminal intersections, and peak direction ramp merge/diverge levels of service on the northbound entrance ramp and southbound exit ramp. Levels of service at the ramp terminal intersections will be improved to “C” for morning design hour (2028) volumes. All ramps are expected to operate at acceptable (“D” or better) levels through the design year except for the northbound entrance ramp merge area during the morning peak hour and the southbound exit ramp diverge area during the afternoon peak hour. These merge/diverge areas are expected to reach capacity around the year 2016 and 2018, respectively, when the mainline freeway drops below level of service “D”.

The recommended improvement plan is expected to improve the safety of the I-65 and State Route 248 interchange, thereby reducing traffic crash rates.

B. Access Analysis

This study was undertaken in accordance with the Federal Highway Administration's (FHWA) policy regarding requests for additional or revised access points to the Interstate System. The FHWA policy is described in the Federal Register Notice, Volume 63, No. 28, dated February 11, 1998. This analysis was conducted to demonstrate the impacts of revisions to the studied interchange. The FHWA requirements are provided in bold type with the response to those requirements immediately following.

The FHWA policy statement reads: "It is in the national interest to maintain the Interstate System to provide the highest level of service in terms of safety and mobility. Adequate control of access is critical to provide such service. Therefore, new or revised access points to the existing Interstate System should meet the following requirements:"

1. **It is demonstrated that the existing interchanges and / or local roads and streets in the corridor can neither provide the necessary access nor be improved to satisfactorily accommodate the design year traffic demands while at the same time providing the access intended by the proposal.**

   State Route 248 is a rural major arterial that provides access to the southern edge of the City of Franklin from I-65. Adjacent interchanges are approximately 4.2 and 2.7 miles away in the north and south directions, respectively. Increases in population in Williamson County and the City of Franklin have resulted in higher traffic volumes routed through the State Route 248 interchange. Traffic is expected to grow at an even faster pace in the coming decade as large tracts of land surrounding the interchange are developed with commercial and residential land uses. The capacity deficiencies projected for the State Route 248 and I-65 interchange cannot be alleviated by local roads or other interchanges. Furthermore, projected traffic volumes cannot be accommodated by the current interchange configuration.

2. **All reasonable alternatives for design options, location and transportation system management type improvements (such as ramp metering, mass transit and HOV facilities) have been assessed and provided for if currently justified, or provisions are included for accommodating such facilities if a future need is identified.**

   The proposed interchange modification is necessary to improve access to the area, provide congestion relief to the surface system it serves, and improve safety through geometric improvements. Safety problems related to the existing interchange cannot be addressed through transportation demand management (TDM) strategies. There is an existing Park and Ride lot located on Long Lane near the interchange that contains 104 parking spaces. It is presently an under-utilized facility that has capacity for serving additional park and ride users. There is no mass transit service in the area of the interchange. HOV facilities begin on I-65 just north of the State Route 96 interchange. TDOT plans to extend the HOV lanes through State Route 248 in conjunction with the previously mentioned widening of I-65 to eight lanes.

3. **The proposed access point does not have a significant adverse impact on the safety and operation of the interstate facility based on analysis of current and future traffic. The operational analysis for existing conditions shall, particularly in urbanized areas include an analysis of sections of interstate to and including at least the first adjacent existing or proposed interchange on either side. Crossroads and other roads and streets shall be included in the analysis to the extent necessary to assure their ability to collect and distribute traffic to and from the interchange with new or revised access points.**

   An operational analysis of current and future traffic was made for sections of the interstate and all ramps and ramp termini within the limits of the State Route 248 interchange area. The existing adjacent interchanges related to the subject interchange are outside the influence of weaving. The subject interchange at State Route 248 is approximately 4.2 miles south of the State Route 96 interchange and approximately 2.7 miles north of the State Route 840 interchange. Considering these observations and the results of the capacity analysis, no adverse impacts are expected from the proposed modification.

4. **The proposed access connects to a public road only and will provide for all turning movements. Less than 'full interchanges' for special purpose access for transit vehicles, for HOV's or into park and ride lots may be considered on a case-by-case basis. The proposed access will be designed to meet or exceed current standards for Federal-Aid projects on the Interstate system.**

   This proposal is a modification to the existing interchange at I-65 and State Route 248. An improved diamond interchange will provide for all traffic movements. The proposed interchange design will meet all American Association of State Highway and Transportation Officials (AASHTO) criteria.

5. **The proposal considers and is consistent with local and regional land use and transportation plans. Prior to final approval, all requests for new or revised access must be consistent with the metropolitan and / or statewide transportation plan, as appropriate, the applicable provisions of 23 CFR part 450 and the transportation conformity requirements of 40 CFR parts 51 and 95.**

   The study was coordinated with the appropriate state and local officials and is consistent with the land use and transportation plans for the City of Franklin.

6. **In areas where the potential exists for future multiple interchange additions, all requests for new or revised access are supported by a comprehensive Interstate network study with recommendations that address all proposed and desired access within the context of a long-term plan.**

   Multiple interchange additions are not foreseen for the project study area.

7. **The request for a new or revised access generated by new or expanded development demonstrates appropriate coordination between the**

development and related or otherwise required transportation system improvements.

Planning for modifications to this interchange were coordinated with the City of Franklin and the development team that is proposing to develop land surrounding the interchange.

8. **The request for new or revised access contains information relative to the planning requirements and the status of the environmental processing of the proposal.**

   This report documents the expected benefits from modifying the existing State Route 248 and I-65 interchange. With the proposed modification, traffic operations at the interchange can be adequately accommodated through the year 2028 with only a few exceptions. Design hour traffic on I-65 north of the interchange will perform at level of service "D" until approximately 2016. After that time, the northbound portion of I-65 and its associated entrance ramp at State Route 248 will be deficient during the morning peak hour, and the southbound portion of I-65 and its exit ramp to State Route 248 will be deficient during the afternoon peak hour. Traffic levels of service at the ramp terminal intersections will be improved with the recommended plan, although levels of service during the afternoon peak hour in 2028 will be in the "E / F" range. Levels of service for morning peak hour conditions in 2028 at the ramp terminal intersections will be greatly improved to a level of service "C". The recommended improvement has been designed to minimize impacts to environmentally sensitive areas. Detailed environmental technical studies will be conducted at a later date.

C. Cost

The total estimated project cost for the recommended plan is $19,710,000. This estimate includes costs to construct a new bridge over I-65, widen and lengthen the interchange ramps, widen State Route 248 in the vicinity of the interchange, and realign Old Peytonsville Road. An estimated cost breakdown for the plan is as follows:

Clear and Grubbing	$	30,000
Earthwork	$	1,070,000
Pavement Removal	$	30,000
Drainage (includes Erosion Control)	$	480,000
Structures	$	5,720,000
Railroad Crossing	$	0
Paving	$	2,845,000
Retaining Walls	$	540,000
Barrier Walls	$	515,000
Maintenance of Traffic	$	285,000
Topsoil	$	20,000
Seeding	$	10,000
Sodding	$	80,000
Signing	$	30,000
Signalization	$	150,000
Fence	$	20,000
Guardrail	$	40,000
Rip Rap or Slope Protection	$	80,000
Other Construction Items (8.5%)	$	1,035,000
Mobilization	$	490,000
Sub-Total Construction Cost	$	13,470,000
Engineering & Contingencies (10%)	$	1,350,000
Total Construction Cost	$	14,820,000
Preliminary Engineering	$	1,350,000
Total Engineering and Construction	**$**	**16,170,000**
Right-Of-Way		
Land, Improvements, and Damages (14 acres)	$	3,210,000
Incidentals (20 tracts)	$	60,000
Relocation Payments (0 Residences) (1 Businesses) (0 Non-Profits)	$	25,000
Total Right-Of-Way Cost	**$**	**3,295,000**
Utility Relocation		
Non-Reimbursable (Local)	$	40,000
Reimbursable (State)	$	205,000
Total Utility Cost	**$**	**245,000**
TOTAL PROJECT COST	**$**	**19,710,000**

CHAPTER 4

SUMMARY AND CONCLUSIONS

Chapter 4. SUMMARY AND CONCLUSIONS

The preceding study was conducted to evaluate the current operation of the existing Interstate 65 and State Route 248 interchange and the effects of the proposed modification. The analyses revealed that the existing interchange with base condition (2008) traffic is operating with failing levels of service at the ramp terminal intersections during peak hours. There are deficiencies on the entrance and exit ramps due to heavy peak hour traffic volumes and inadequate acceleration and deceleration lengths. Traffic crash rates on State Route 248 in the vicinity of the interchange and along mainline I-65 are higher than statewide averages.

With the proposed modifications to the interchange, levels of service can be improved to "D" or better through the year 2028 with only a few exceptions. These exceptions include the northbound entrance ramp during the morning design hour, the southbound exit ramp during the afternoon design hour, and the ramp terminal intersections during the afternoon design hour. The ramps are expected to reach capacity around the year 2016 when the mainline freeway drops below level of service "D".

The recommended improvements will reduce congestion on State Route 248, lower travel time and emissions, and improve safety for motorists. With the proposed modification, the service life of the interchange can be extended to at least the year 2016 and safety can be improved for the traveling public.

Interchange Modification Study for I-65 @ SR 248

APPENDIX

TRAFFIC VOLUMES

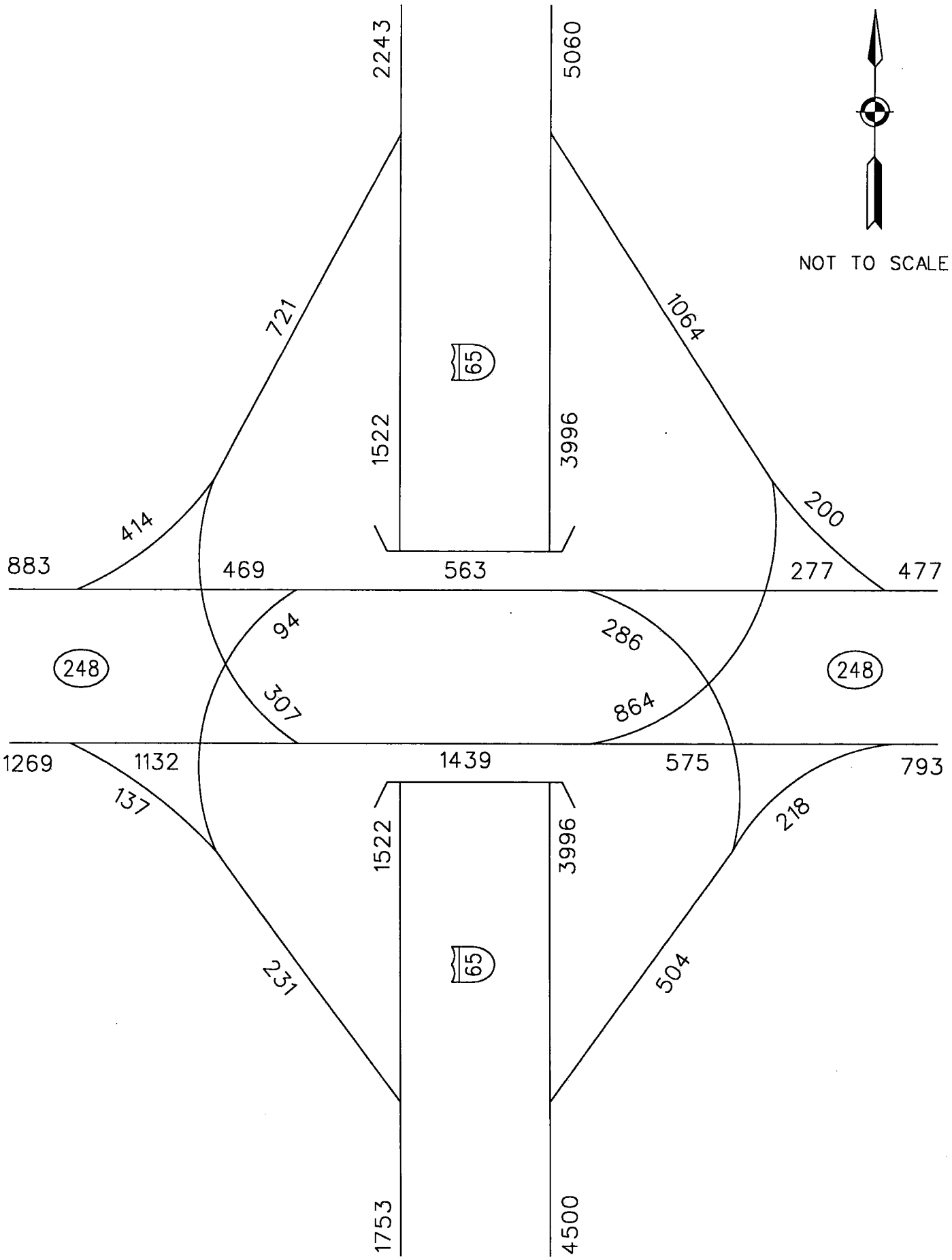

sain associates
Suite 200, 244 West Valley Avenue ◆ Birmingham, Alabama 35209
Phone: (205) 940-6420

FIGURE 1

2008 AM DESIGN HOUR VOLUMES

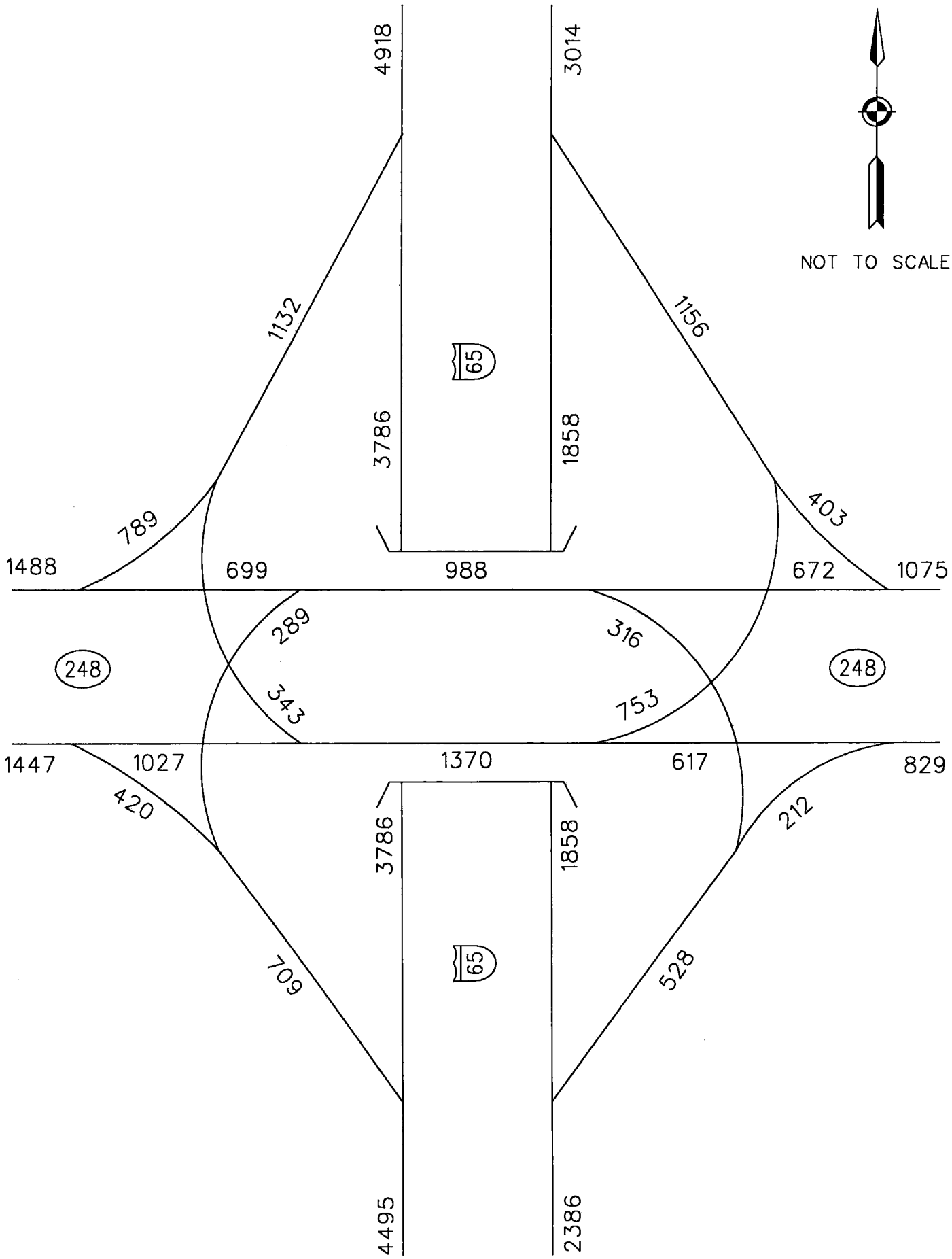

sain associates
Suite 200, 244 West Valley Avenue ◆ Birmingham, Alabama 35209
Phone: (205) 940-6420

FIGURE 2

2008 PM DESIGN HOUR VOLUMES

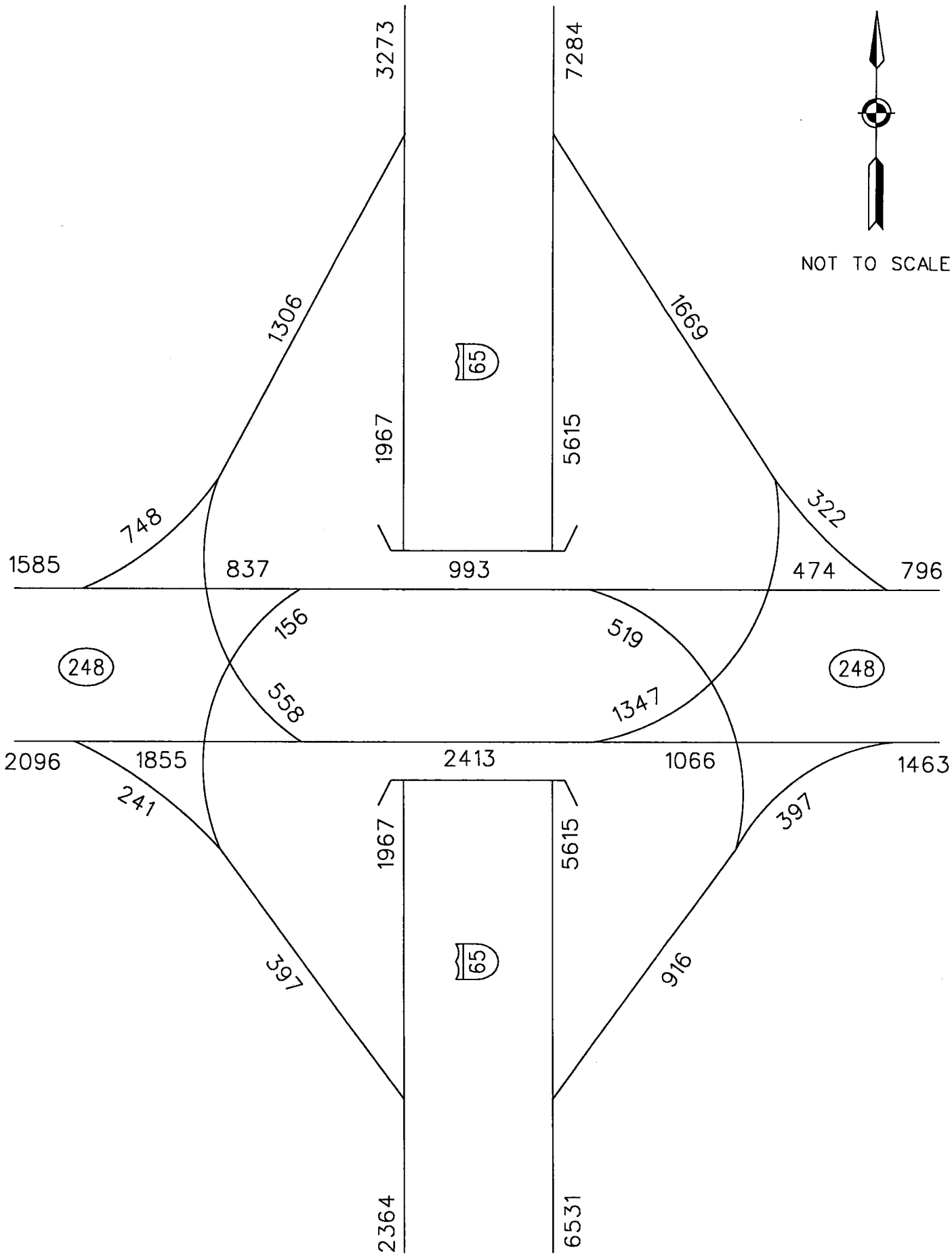

sain associates
Suite 200, 244 West Valley Avenue ◆ Birmingham, Alabama 35209
Phone: (205) 940-6420

FIGURE 3

2028 AM DESIGN HOUR VOLUMES

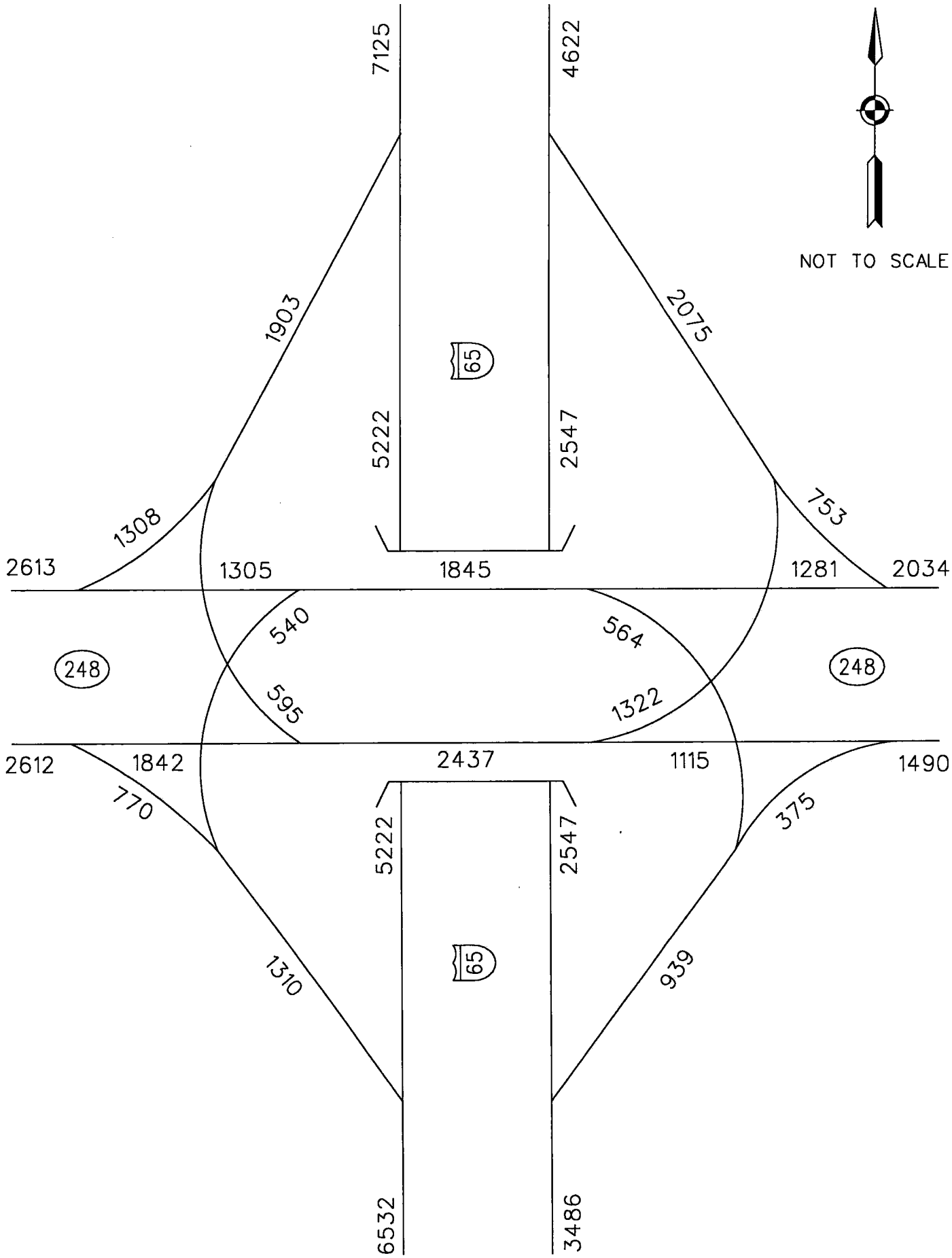

sain associates
Suite 200, 244 West Valley Avenue ◆ Birmingham, Alabama 35209
Phone: (205) 940-6420

FIGURE 4

2028 PM DESIGN HOUR VOLUMES

CONSIDERED ALTERNATES

TYPE	YEAR	PROJECT NO.	SHEET NO.
			1

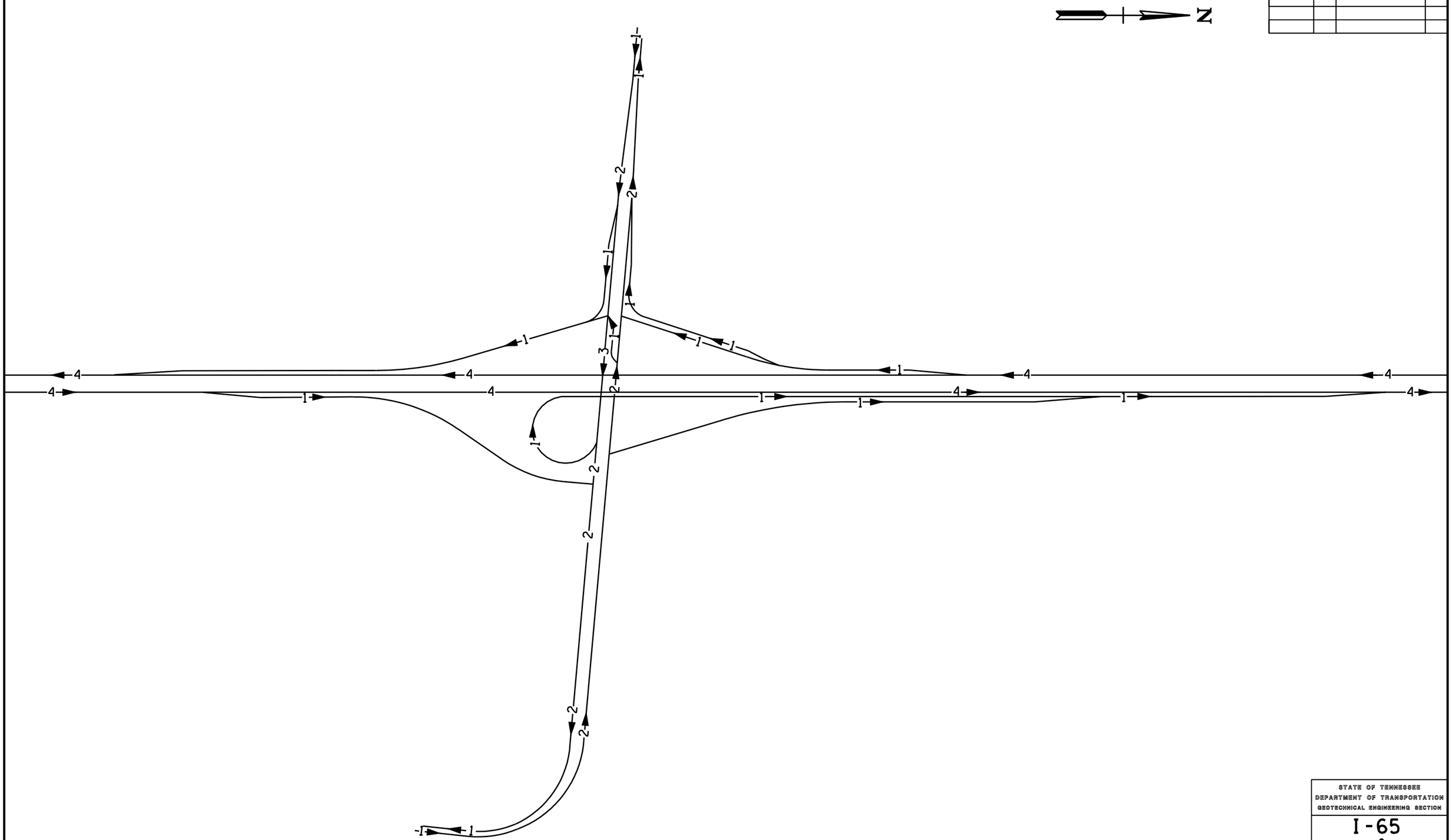

STATE OF TENNESSEE
DEPARTMENT OF TRANSPORTATION
GEOTECHNICAL ENGINEERING SECTION

I-65 & SR-248

(LOOP RAMP CONCEPT)

SCALE: NOT TO SCALE

FUNCTIONAL PLANS

DESIGN DIVISION

FILE NO. P01

TENN.	YEAR	SHEET NO.
	2006	1
FED. AID PROJ. NO.		
STATE PROJ. NO.		

Index Of Sheets

SHEET NO.	DESCRIPTION
1	TITLE SHEET
2-2B	TYPICAL SECTIONS
3-9	LAYOUT SHEETS

STATE OF TENNESSEE
DEPARTMENT OF TRANSPORTATION
PLANNING DIVISION

WILLIAMSON COUNTY

INTERCHANGE MODIFICATION STUDY
INTERSTATE 65 @ STATE ROUTE 248
(PEYTONSVILLE ROAD), WILLIAMSON COUNTY

STATE HIGHWAY NO. 248 F.A.H.S. NO.

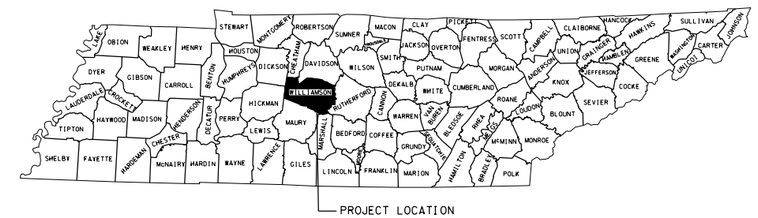

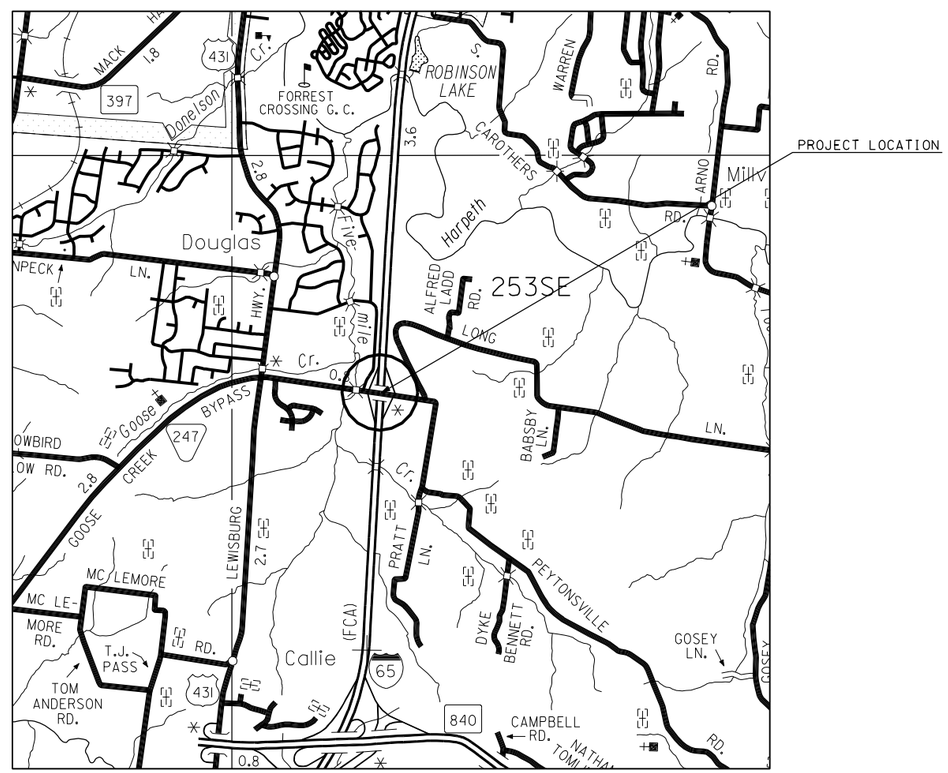

SCALE: 1"= 1 MILE

N

SPECIAL NOTES

PROPOSALS MAY BE REJECTED BY THE COMMISSIONER IF ANY OF THE UNIT PRICES CONTAINED THEREIN ARE OBVIOUSLY UNBALANCED, EITHER EXCESSIVE OR BELOW THE REASONABLE COST ANALYSIS VALUE.

THIS PROJECT TO BE CONSTRUCTED UNDER THE STANDARD SPECIFICATIONS OF THE TENNESSEE DEPARTMENT OF TRANSPORTATION DATED MARCH 1, 2006 AND ADDITIONAL SPECIFICATIONS AND SPECIAL PROVISIONS CONTAINED IN THE PLANS AND IN THE PROPOSAL CONTRACT

TDOT ROAD SP. SV. 2 _____

DESIGNER SAIN ASSOCIATES, INC CHECKED BY _____

P.E. NO. _____

TRAFFIC DATA

ADT (2008)	
ADT (2028)	
DHV (2028)	3,680 AM / 5,225 PM
D	46% / 54%
T (ADT)	
T (DHV)	11 %
V	40 MPH
V (EAST OF I-65)	30 MPH

APPROVED:

DIRECTOR, DESIGN DIVISION

DATE:

APPROVED:

COMMISSIONER

U.S. DEPARTMENT OF TRANSPORTATION
FEDERAL HIGHWAY ADMINISTRATION

APPROVED:

DIVISION ADMINISTRATOR DATE

$$$$DGNSPEC$$$$
$$$$SYTIME$$$$

DESIGN DIVISION

FILE NO.

TYPE	YEAR	PROJECT NO.	SHEET NO.
	2006		2

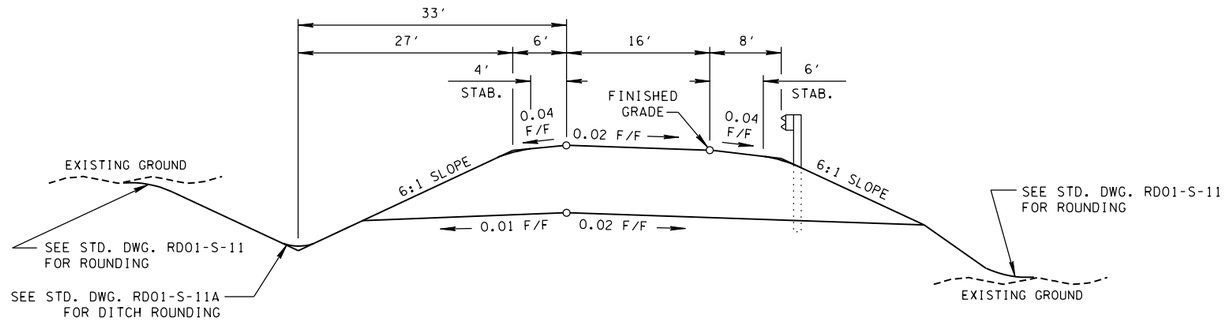

TYPICAL SECTION

(BASED ON STD. DWG. RD01-TS-4)

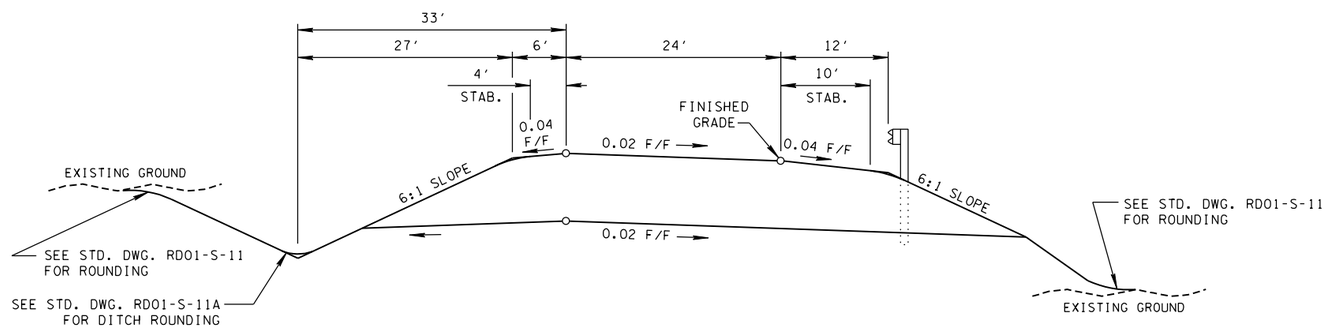

TYPICAL SECTION

(BASED ON STD. DWG. RD01-TS-4)

$$$$SYTIME$$$$$$$

$$$$DGNSPEC$$$$$$$

DESIGN DIVISION

FILE NO.

TYPE	YEAR	PROJECT NO.	SHEET NO.
	2006		2A

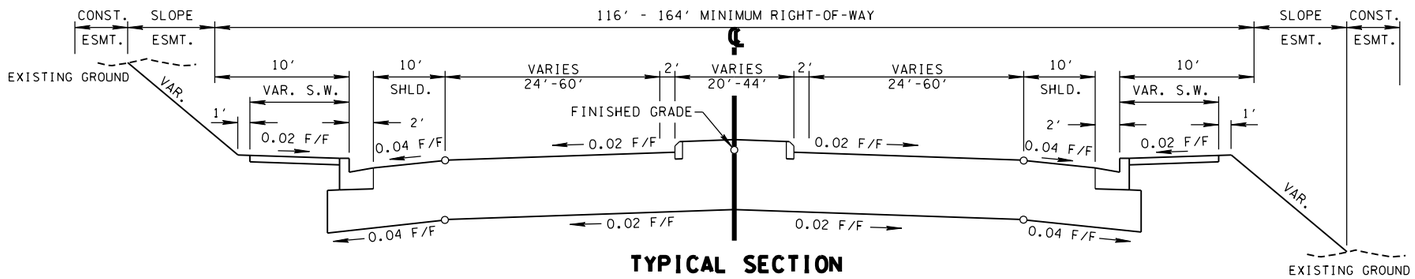

TYPICAL SECTION

(BASED ON STD. DWG. RD01-TS-6)

SR-248 (PEYTONSVILLE ROAD)

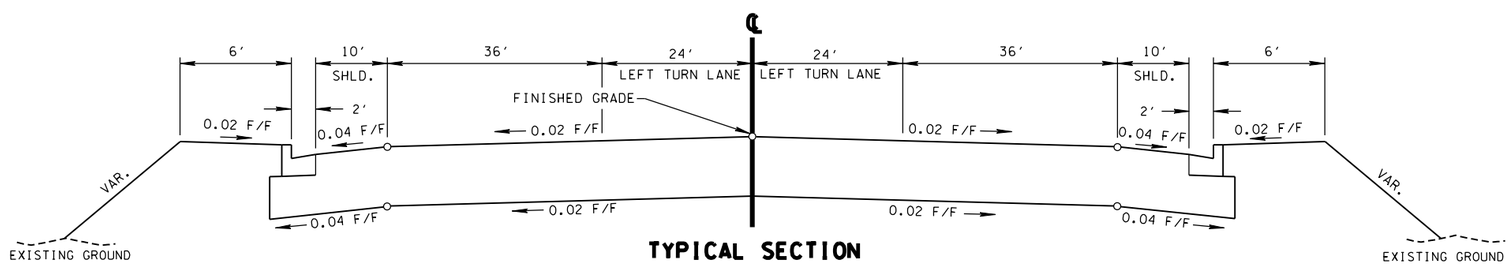

TYPICAL SECTION

(BASED ON STD. DWG. RD01-TS-6)

SR-248 (PEYTONSVILLE ROAD)
OVER I-65

$$$$SYTIME$$$$$$$
$$$$DGNSPEC$$$$$$$

DESIGN DIVISION

FILE NO.

TYPE	YEAR	PROJECT NO.	SHEET NO.
	2006		2B

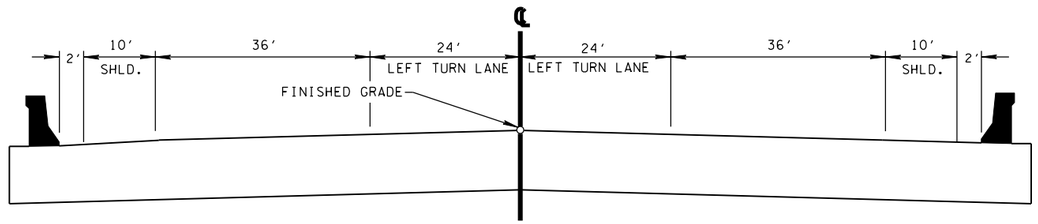

TYPICAL SECTION

(BASED ON STD. DWG. RD01-TS-6)

SR-248 (PEYTONSVILLE ROAD)
BRIDGE OVER I-65

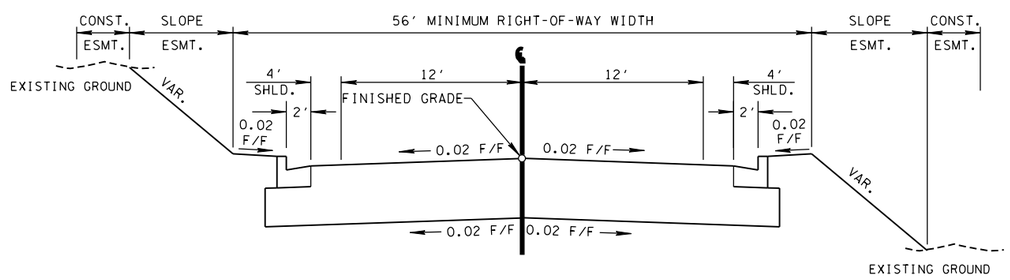

TANGENT SECTION

(BASED ON STD. DWG. RD01-TS-6)

OLD PEYTONSVILLE ROAD

$$$$SYTIME$$$$$$$$
$$$$DGNSPEC$$$$$$$$

DESIGN DIVISION

FILE NO.

$$$$SYTIME$$$$$$$$

$$$$DGNSPEC$$$$$$$$

DESIGN DIVISION

FILE NO.

TYPE	YEAR	PROJECT NO.	SHEET NO.
	2006		4

STATE OF TENNESSEE
DEPARTMENT OF TRANSPORTATION
BUREAU OF PLANNING & DEVELOPMENT

WILLIAMSON COUNTY
S.R. 248/I65
PROPOSED LAYOUT
(DIAMOND CONCEPT)

SCALE: 1"=100'

$$$$SYTIME$$$$$$$

$$$$DGNSPEC$$$$$$$

DESIGN DIVISION

FILE NO.

TYPE	YEAR	PROJECT NO.	SHEET NO.
	2006		5

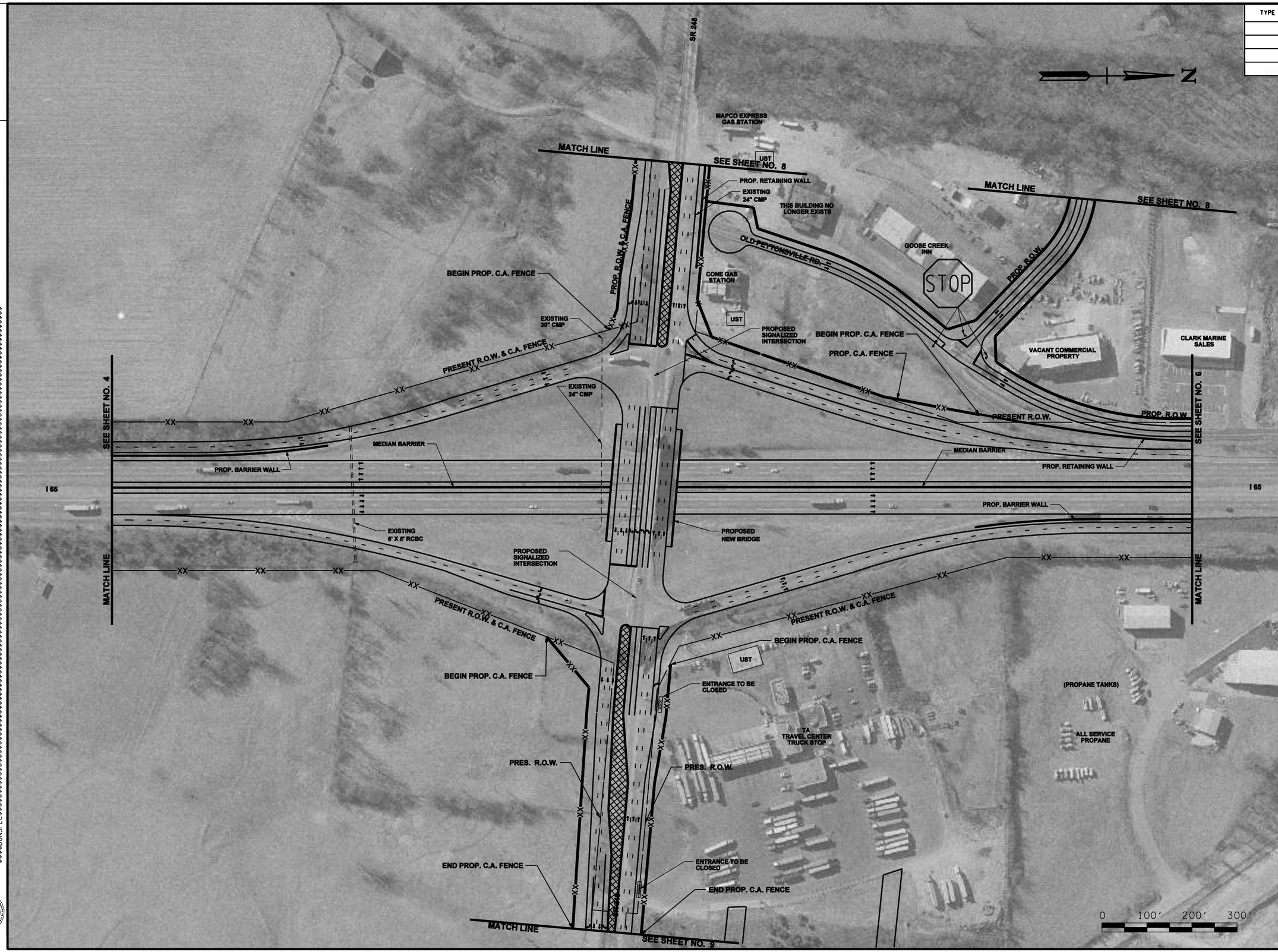

PROPOSED RAISED MEDIAN

STATE OF TENNESSEE
DEPARTMENT OF TRANSPORTATION
BUREAU OF PLANNING & DEVELOPMENT

WILLIAMSON COUNTY
S.R. 248/I65
PROPOSED LAYOUT
(DIAMOND CONCEPT)

SCALE: 1"=100'

$$$$SYTIME$$$$$$$
$$$$DONSPEC$$$$$$$

DESIGN DIVISION

FILE NO.

TYPE	YEAR	PROJECT NO.	SHEET NO.
	2006		6

$$$$SYTIME$$$$$$$

$$$$DONSPEC$$$$$$$

DESIGN DIVISION

FILE NO.

TYPE	YEAR	PROJECT NO.	SHEET NO.
	2006		7

$$$$SYTIME$$$$$$$$

$$$$DGNSPEC$$$$$$$$

DESIGN DIVISION

FILE NO.

TYPE	YEAR	PROJECT NO.	SHEET NO.
	2006		8

PROPOSED RAISED MEDIAN

STATE OF TENNESSEE
DEPARTMENT OF TRANSPORTATION
BUREAU OF PLANNING & DEVELOPMENT

WILLIAMSON COUNTY
S.R. 248/I65
PROPOSED LAYOUT
(DIAMOND CONCEPT)

SCALE: 1"=100'

$$$$SYTIME$$$$$$$

$$$$DGNSPEC$$$$$$$

DESIGN DIVISION

FILE NO.

TYPE	YEAR	PROJECT NO.	SHEET NO.
	2006		9

PROPOSED RAISED MEDIAN

STATE OF TENNESSEE
DEPARTMENT OF TRANSPORTATION
BUREAU OF PLANNING & DEVELOPMENT

WILLIAMSON COUNTY
S.R. 248/I65
PROPOSED LAYOUT
(DIAMOND CONCEPT)

SCALE: 1"=100'

$$$$SYTIME$$$$$$$$
$$$$DGNSPEC$$$$$$$$

DESIGN DIVISION

FILE NO.

TYPE	YEAR	PROJECT NO.	SHEET NO.
	2006		2

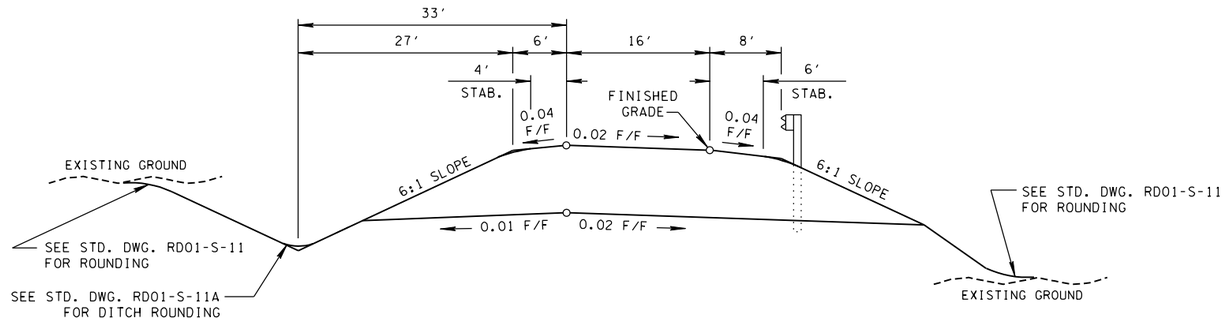

TYPICAL SECTION

(BASED ON STD. DWG. RD01-TS-4)

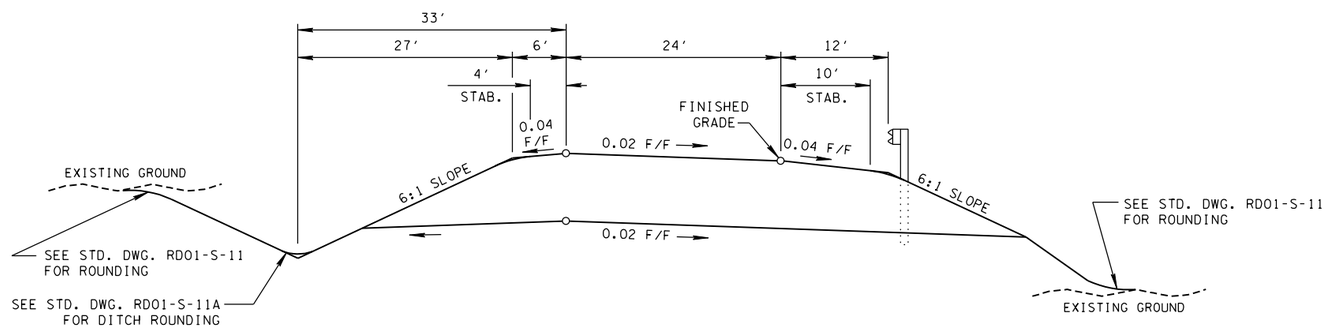

TYPICAL SECTION

(BASED ON STD. DWG. RD01-TS-4)

$$$$SYTIME$$$$$$$

$$$$DGNSPEC$$$$$$$

DESIGN DIVISION

FILE NO.

TYPE	YEAR	PROJECT NO.	SHEET NO.
	2006		2A

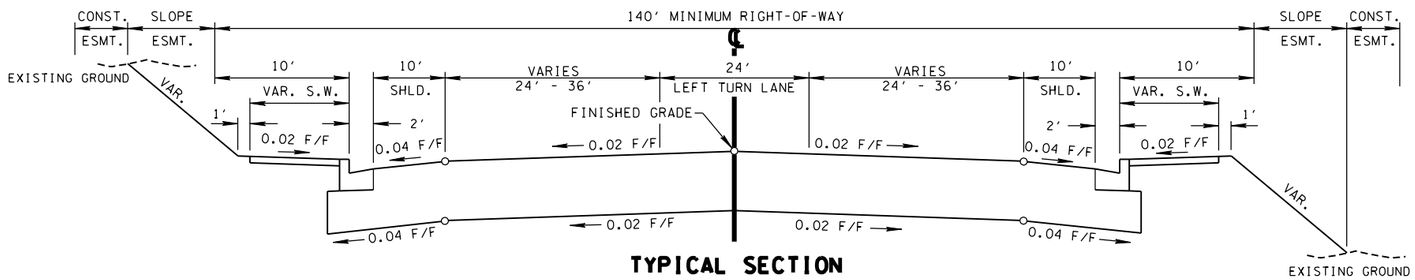

TYPICAL SECTION

(BASED ON STD. DWG. RD01-TS-6)

SR-248 (PEYTONSVILLE ROAD)

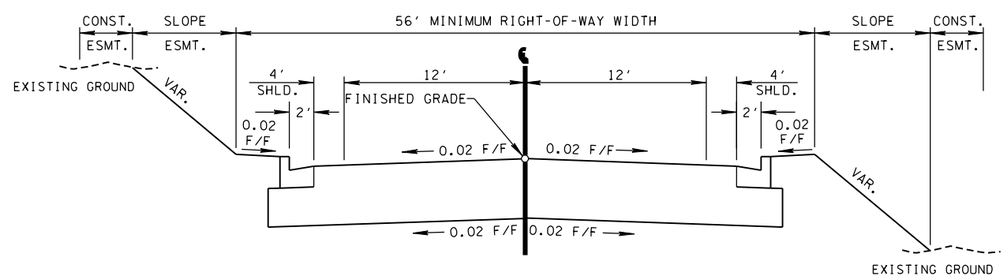

TANGENT SECTION

(BASED ON STD. DWG. RD01-TS-6)

OLD PEYTONSVILLE ROAD

$$$$SYTIME$$$$$$$

$$$$DGNSPEC$$$$$$$

DESIGN DIVISION

FILE NO.

TYPE	YEAR	PROJECT NO.	SHEET NO.
	2006		3

$$$$SYTIME$$$$$$$

$$$$DGNSPEC$$$$$$$

STATE OF TENNESSEE
DEPARTMENT OF TRANSPORTATION
BUREAU OF PLANNING & DEVELOPMENT

WILLIAMSON COUNTY
S.R. 248/I65
PROPOSED LAYOUT
(S.P.U.I.)

SCALE: 1"=100'

DESIGN DIVISION

FILE NO.

TYPE	YEAR	PROJECT NO.	SHEET NO.
	2006		4

STATE OF TENNESSEE
DEPARTMENT OF TRANSPORTATION
BUREAU OF PLANNING & DEVELOPMENT

WILLIAMSON COUNTY
S.R. 248/I65
PROPOSED LAYOUT
(S.P.U.I.)

SCALE: 1"=100'

$$$$SYTIME$$$$$$$

$$$$DONSPEC$$$$$$$

DESIGN DIVISION

FILE NO.

TYPE	YEAR	PROJECT NO.	SHEET NO.
	2006		5

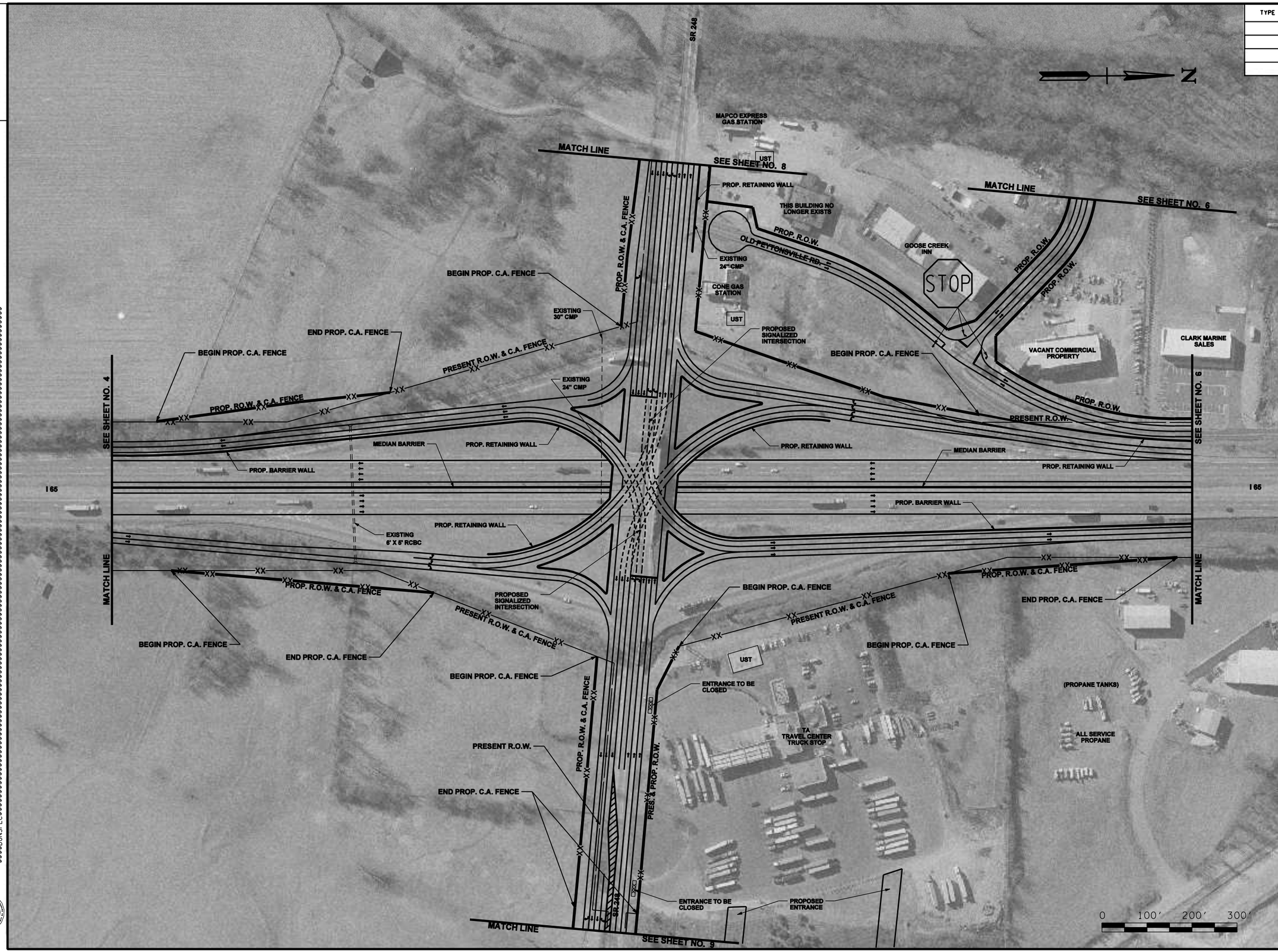

STATE OF TENNESSEE
DEPARTMENT OF TRANSPORTATION
BUREAU OF PLANNING & DEVELOPMENT

WILLIAMSON COUNTY
S.R. 248/I65
PROPOSED LAYOUT
(S.P.U.I.)

SCALE: 1"=100'

$$$$SYTIME$$$$$$$$
$$$$DGNSPEC$$$$$$$$

DESIGN DIVISION

FILE NO.

TYPE	YEAR	PROJECT NO.	SHEET NO.
	2006		6

$$$$SYTIME$$$$$$$

$$$$DONSPEC$$$$$$$

DESIGN DIVISION

FILE NO.

TYPE	YEAR	PROJECT NO.	SHEET NO.
	2006		7

STATE OF TENNESSEE
DEPARTMENT OF TRANSPORTATION
BUREAU OF PLANNING & DEVELOPMENT

WILLIAMSON COUNTY
S.R. 248/I65
PROPOSED LAYOUT
(S.P.U.I.)

SCALE: 1"=100'

$$$$SYTIME$$$$$$$
$$$$DGNSPEC$$$$$$$

DESIGN DIVISION

FILE NO.

TYPE	YEAR	PROJECT NO.	SHEET NO.
	2006		8

STATE OF TENNESSEE
DEPARTMENT OF TRANSPORTATION
BUREAU OF PLANNING & DEVELOPMENT

WILLIAMSON COUNTY
S.R. 248/I65
PROPOSED LAYOUT
(S.P.U.I.)

SCALE: 1"=100'

$$$$SYTIME$$$$$$$
$$$$DONSPEC$$$$$$$

DESIGN DIVISION

FILE NO.

TYPE	YEAR	PROJECT NO.	SHEET NO.
	2006		9

STATE OF TENNESSEE
DEPARTMENT OF TRANSPORTATION
BUREAU OF PLANNING & DEVELOPMENT

WILLIAMSON COUNTY
S.R. 248/I65
PROPOSED LAYOUT
(S.P.U.I.)

SCALE: 1"=100'

$$$$SYTIME$$$$$$$$

$$$$DGNSPEC$$$$$$$$

COST ESTIMATE WORKSHEETS

COST ESTIMATE

PROJECT NUMBER	SECTION #	ALT. NAME	SECTION LENGTH (FT)
01-184-8		DIAMOND	**N.A.**
I-65 @ SR-248			
(Williamson County)			

CLEARING & GRUBBING					**COST ($)**
Acres	14				
Cost/acre ($) =	2000				
TOTAL ($) =	28000				
ROUNDED TOTAL ($) =					**$30,000**
EARTHWORK					
TOTAL ($) =	1066667			1066667	
ROUNDED TOTAL ($) =					**$1,070,000**
PAVEMENT REMOVAL					
Length (ft) =	650	2500			
# of lanes =	1	2			
Cost / l.f. =	5.00	5.00			
TOTAL ($) =	3250	25000			
ROUNDED TOTAL ($) =					**$30,000**
DRAINAGE					
Closed System					
Storm Sewer Pipe	*pipe size*	*length (ft)*	*cost / l.f. ($)*	total ($)	
	18	2150	30	64500	
	24	1505	35	52675	
	30	645	40	25800	
Inlets	*number*	*cost / ea. ($)*	total ($)		
	22	2000	44000		
Open System					
	width	length	cost/s.f. ($)	total ($)	
Box Culverts(Extension)	6	20	60	7200	
Subtotal	194175				
Other Drainage	19418				
TOTAL	213593				
ROUNDED TOTAL					**$215,000**
STRUCTURES					
Description:	*Size (s.f.)*	*cost /s.f. ($)*	total ($)		
Bridge over I-65	37440	100.00	3744000		
Bridge over Five Mile Creek	23760	75.00	1782000		
Bridge over Five Mile Creek	2552	75.00	191400		
TOTAL ($) =			**5717400**		
ROUNDED TOTAL ($) =					**$5,720,000**
PAVING					
DESCRIPTION:	*Length (ft)*	*Cost / l.f. ($)*	Total ($)		
2-Lane rural	550	50	27500		
3-Lane rural	280	58	16240		
2-Lane curb and gutter w/shldr	3610	110	397100		
3-Lane curb and gutter w/shldr	650	130	84500		
4-Lane w/flush median	350	300	105000		
Transition from 2L to 4L flush med	310	200	62000		
6-Lane w/median	875	300	262500		
10-Lane Bridge	550	325	178750		
8-Lane w/median	500	325	162500		
6-Lane w/median	725	300	217500		
4-Lane w/taper median	500	182	91000		
1-Lane Ramps	6300	79	497700		
2-Lane Ramps	5960	105	625800		
3-Lane Ramps	1230	130	159900		
TOTAL ($) =			2844250		
ROUNDED TOTAL ($) =					**$2,845,000**

RETAINING WALLS

Length (ft)	=	1020	
Height (ft)	=	15	
Cost / s.f. ($)	=	35.00	
TOTAL ($)	=	535500	
ROUNDED TOTAL ($)	=		**$540,000**

BARRIER WALL

Length (ft)	=	3200	
Cost / ft. ($)	=	160	
TOTAL ($)	=	512000	
ROUNDED TOTAL ($)	=		**$515,000**

MAINT. OF TRAFFIC

Length (ft)	=	15000	
Cost / mile ($)	=	100000	
TOTAL ($)	=	284091	
ROUNDED TOTAL ($)	=		**$285,000**

TOPSOIL

Length (ft.)	=	15000	1200	
Width (ft.)	=	20	44	
Depth (ft.)	=	0.5	0.5	
Volume (cu. yd.)	=	5556	978	
Cost / cu. yd	=	3.00	3.00	
TOTAL ($)	=	16667	2933	
ROUNDED TOTAL ($)	=			**$20,000**

SEEDING

TOTAL ($)	=	9800	
ROUNDED TOTAL ($)	=		**$10,000**

SODDING

Length (ft.)	=	8800	1200	
Width (ft.)	=	20	44	
Area (sq. yd.)	=	19556	5867	
Cost / sq. yd	=	3.00	3.00	
TOTAL ($)	=	58667	17600	
ROUNDED TOTAL ($)	=			**$80,000**

SIGNING

Length (ft)	=	15000	
Cost / mile ($)	=	10000	
TOTAL ($)	=	28409	
ROUNDED TOTAL ($)	=		**$30,000**

SIGNALIZATION

		number	*Cost / ea. ($)*	Total ($)	
		2	75000	150000	
TOTAL ($)	=			150000	
ROUNDED TOTAL ($)	=				**$150,000**

C.A. FENCE

Length (ft)	=	3855	
Cost / ft. ($)	=	4.00	
TOTAL ($)	=	15420	
ROUNDED TOTAL ($)	=		**$20,000**

GUARDRAIL

Length (ft)	=	950		
Cost / l.f. ($)	=	12.00		
Subtotal	=	11400		
End Treatments (#)	=	12		
Cost (each) ($)	=	2000		
Subtotal	=	24000		
TOTAL ($)	=	35400		
ROUNDED TOTAL ($)	=			**$40,000**

RIP-RAP

TOTAL ($)	=	80000		
ROUNDED TOTAL ($)	=			**$80,000**

SUBTOTAL	=		$11,680,000	
OTHER CONST. ITEMS (8.5%)	=	$1,034,450		**$1,035,000**
MOBILIZATION	=	$488,800		**$490,000**
($430,000 plus 3.5% of total contract amount exceeding $10,000,000)				
EROSION CONTROL	=	$261,975		**$265,000**
(3.5% of Construction Cost Excluding Structures)				
SUBTOTAL CONST. COST	=			**$13,470,000**
10% ENG. & CONT.	=	1347000		**$1,350,000**

TOTAL CONST. COST	=	**$14,820,000**
PRELIMNINARY ENG. (10%)	=	**$1,350,000**
R.O.W. ACQUISITION COST	=	**$3,295,000**
REIMBURSABLE UTILITY COST	=	**$205,000**
NON-REIMBURSABLE UTILITY COST	=	**$40,000**
TOTAL SECTION COST	=	**$19,710,000**

RIGHT-OF-WAY REPORT FOR LOCATION STUDY

STATE PROJ. SR-248 @ I-65 COUNTY WILLIAMSON

FEDERAL PROJ. PROJ. DESC. DIAMOND INTERCHANGE

ESTIMATED RIGHT-OF-WAY COSTS

	SECTION 1	SECTION	SECTION	SECTION	SECTION
		ALT.	ALT.	ALT.	ALT.
COST ITEMS	EST. COST	EST. COST	EST. COST	EST. COST	EST. COST
LAND REQUIRED	$1,935,000				
ACRES	14				
IMPROVEMENTS	$1,000,000				
NUMBER	20				
DAMAGES	$275,000				
INCIDENTALS	$60,000				
RESIDENTIAL REL.	$0				
NUMBER	0				
BUS. & FARM REL.	$25,000				
NUMBER	1				
TOTAL EST. COST OF ROW	$3,295,000		$0	$0	$0

REMARKS:

PREPARED BY

SAIN ASSOCIATES, INC. 2/6/2006

NAME DATE

RECOMMENDED

NAME DATE

APPROVED

NAME DATE

SA# 01-184-8 (DIAMOND) ESTIMATED R.O.W. ACQUISITION COST

Improvement, Land, and Damage Figures

Land:	Acres	Cost/Acre	Total Cost	Rounded Total
	14	75000	1050000	$1,050,000

Improvements:	Total Cost	Rounded Total
	1000000	$1,000,000
Subtotal		$2,050,000

Moving Cost Expenses

Description	Number	Cost/Ea.	Total Cost	Rounded Total
Business	1	25000	25000	$25,000

Damages:	Total Cost	Rounded Total
Loss of Parking	75000	
Loss of Access	200000	
Subtotal	275000	$275,000

Replacement Housing Cost

Description	Number	Cost/Ea.	Total Cost	Rounded Total
Owner Occupant	0	12000	0	$0

Incidental Expenses per Tract

Number	Cost/Ea.	Total Cost	Rounded Total
20	3000	60000	$60,000

Contingencies, including condemnation and time adjustment

$2,650,000 X 0.43 =	881500
Rounded for Estimate	$885,000

Total R.O.W. Estimate = **$3,295,000**

PARCEL	LAND APPRAISAL	TOTAL LAND UNITS		
21.00	$200,000.00	1.00	$200,000.00	
22.00	$392,300.00	5.23	$75,009.56	
22.01	$27,000.00	2.60	$10,384.62	
22.02	$324,200.00	2.29	$141,572.05	
24.00	$659,500.00	13.19	$50,000.00	
25.00	$191,000.00	5.97	$31,993.30	
30.00	$2,484,500.00	207.00	$12,002.42	
			$520,961.94	$74,423.13

STATE OF TENNESSEE - DEPARTMENT OF TRANSPORTATION

UTILITY REPORT FOR LOCATION STUDY

ROUTE NO. SR-248 @ I-65 ALTERNATE DIAMOND INTERCHANGE

PROJECT NO. COUNTY WILLIAMSON

FROM

TO

UTILITY	TOTAL COST OF ADJUSTMENTS	REIMBURSABLE BY STATE
ELECTRIC	$32,250	$26,250
TELEPHONE	$140,000	$140,000
WATER	$43,225	$13,375
NATURAL GAS	$22,550	$22,550
SANITARY SEWER	$0	$0
TOTAL	$238,025	$202,175
ROUNDED TOTAL FOR ESTIMATE	$245,000	$205,000

REMARKS:

RAILROAD YES [ ] NO [X]

PREPARED BY: SAIN ASSOCIATES, INC.

DATE: 2/6/2006

SA# 01-184-8 (DIAMOND) REIMBURSABLE UTILITY RELOCATION COST

ELECTRIC

DESCRIPTION	NUMBER	COST/EA.	COST
TWO-PHASE LINE	10	2000.00	20000
SERVICE DROPS	5	1250.00	6250
SUBTOTAL			26250

TELEPHONE

DESCRIPTION	NUMBER	COST/FT	COST
Toll Cable (AT&T)	2000	70.00	140000
SUBTOTAL			140000

WATER

DESCRIPTION	LENGTH (FT.)	COST/L.F.	COST
6" DUCTILE IRON	625	17.00	10625
	NUMBER	COST/EA.	COST
Water Meters	5	550.00	2750
	NUMBER	COST/EA.	COST
FIRE HYDRANT	0	1250.00	0
SUBTOTAL			13375

NATURAL GAS

DESCRIPTION	LENGTH (FT.)	COST/L.F.	COST
2" Steel	2050	11.00	22550
SUBTOTAL			22550

TOTAL	202175
ROUNDED TOTAL	**$205,000**

NON-REIMBURSABLE UTILITY RELOCATION COST

ELECTRIC

DESCRIPTION	NUMBER	COST/EA.	COST
TWO-PHASE LINE	3	2000.00	6000
SUBTOTAL			6000

TELEPHONE

DESCRIPTION	NUMBER	COST/FT	COST
Toll Cable (AT&T)	0	58.00	0
SUBTOTAL			0

WATER

DESCRIPTION	LENGTH (FT.)	COST/L.F.	COST
6" DUCTILE IRON	1650	17.00	28050
	NUMBER	COST/EA.	COST
6" VALVE & BOX	1	550.00	550
	NUMBER	COST/EA.	COST
FIRE HYDRANT	1	1250.00	1250
SUBTOTAL			29850

NATURAL GAS

DESCRIPTION	LENGTH (FT.)	COST/L.F.	COST
2" Steel	0	11.00	0
SUBTOTAL			0

TOTAL	35850
ROUNDED TOTAL	**$40,000**

COST ESTIMATE

PROJECT NUMBER	SECTION #	ALT. NAME	SECTION LENGTH (FT)
01-184-8		(SPUI)	**N.A.**
I-65 @ SR-248			
(Williamson County)			

CLEARING & GRUBBING					**COST ($)**
Acres	13				
Cost/acre ($) =	2000				
TOTAL ($) =	26000				
ROUNDED TOTAL ($) =					**$30,000**
EARTHWORK					
TOTAL ($) =	1066667			1066667	
ROUNDED TOTAL ($) =					**$1,070,000**
PAVEMENT REMOVAL					
Length (ft) =	4100	4500			
# of lanes =	1	2			
Cost / l.f. =	5.00	5.00			
TOTAL ($) =	20500	45000			
ROUNDED TOTAL ($) =					**$70,000**
DRAINAGE					
Closed System					
Storm Sewer Pipe	*pipe size*	*length (ft)*	*cost / l.f. ($)*	total ($)	
	18	2150	30	64500	
	24	1505	35	52675	
	30	645	40	25800	
Inlets	*number*	*cost / ea. ($)*	total ($)		
	22	2000	44000		
Open System					
	width	length	cost/s.f. ($)	total ($)	
Box Culverts(Extension)	6	120	60	43200	
Subtotal	230175				
Other Drainage	23018				
TOTAL	253193				
ROUNDED TOTAL					**$255,000**
STRUCTURES					
Description:	*Size (s.f.)*	*cost /s.f. ($)*	total ($)		
Bridge over I-65	73500	100.00	7350000		
Bridge over Five Mile Creek	13800	75.00	1035000		
Bridge over Five Mile Creek	2080	75.00	156000		
TOTAL ($) =			**8541000**		
ROUNDED TOTAL ($) =					**$8,545,000**
PAVING					
DESCRIPTION:	*Length (ft)*	*Cost / l.f. ($)*	Total ($)		
8-Lane Curb and Gutter	1600	300	480000		
Transition	1900	250	475000		
3-Lane with shoulders	800	58	46400		
2-lane curb & gutter w/shoulder	4700	110	517000		
1-Lane Ramps	5700	79	450300		
2-Lane Ramps	6400	105	672000		
3-Lane Ramps	2100	130	273000		
TOTAL ($) =			2913700		
ROUNDED TOTAL ($) =					**$2,915,000**

RETAINING WALLS

Length (ft)	=	2000	
Height (ft)	=	15	
Cost / s.f. ($)	=	35.00	
TOTAL ($)	=	1050000	
ROUNDED TOTAL ($)	=		**$1,050,000**

BARRIER WALL

Length (ft)	=	4350	
Cost / ft. ($)	=	160	
TOTAL ($)	=	696000	
ROUNDED TOTAL ($)	=		**$700,000**

MAINT. OF TRAFFIC

Length (ft)	=	15000	
Cost / mile ($)	=	100000	
TOTAL ($)	=	284091	
ROUNDED TOTAL ($)	=		**$285,000**

TOPSOIL

Length (ft.)	=	15000	
Width (ft.)	=	20	
Depth (ft.)	=	0.5	
Volume (cu. yd.)	=	5556	
Cost / cu. yd	=	3.00	
TOTAL ($)	=	16667	
ROUNDED TOTAL ($)	=		**$20,000**

SEEDING

TOTAL ($)	=	8333	
ROUNDED TOTAL ($)	=		**$10,000**

SODDING

Length (ft.)	=	8800	
Width (ft.)	=	20	
Area (sq. yd.)	=	19556	
Cost / sq. yd	=	3.00	
TOTAL ($)	=	58667	
ROUNDED TOTAL ($)	=		**$60,000**

SIGNING

Length (ft)	=	15000	
Cost / mile ($)	=	10000	
TOTAL ($)	=	28409	
ROUNDED TOTAL ($)	=		**$30,000**

SIGNALIZATION

		number	*Cost / ea. ($)*	Total ($)	
		1	100000	100000	
TOTAL ($)	=			100000	
ROUNDED TOTAL ($)	=				**$100,000**

C.A. FENCE

Length (ft)	=	5350	
Cost / ft. ($)	=	4.00	
TOTAL ($)	=	21400	
ROUNDED TOTAL ($)	=		**$25,000**

GUARDRAIL

Length (ft)	=	1500		
Cost / l.f. ($)	=	12.00		
Subtotal	=	18000		
End Treatments (#)	=	11		
Cost (each) ($)	=	2000		
Subtotal	=	22000		
TOTAL ($)	=	40000		
ROUNDED TOTAL ($)	=			**$40,000**

RIP-RAP

TOTAL ($)	=	80000		
ROUNDED TOTAL ($)	=			**$80,000**

SUBTOTAL	=		$15,285,000	
OTHER CONST. ITEMS (8.5%)	=	$1,351,500		**$1,355,000**
MOBILIZATION	=	$614,975		**$615,000**
($430,000 plus 3.5% of total contract amount exceeding $10,000,000)				
EROSION CONTROL	=	$304,850		**$305,000**
(3.5% of Construction Cost Excluding Structures)				
SUBTOTAL CONST. COST	=			**$17,560,000**
10% ENG. & CONT.	=	1756000		**$1,760,000**

TOTAL CONST. COST	=	**$19,320,000**
PRELIMNINARY ENG. (10%)	=	**$1,760,000**
R.O.W. ACQUISITION COST	=	**$3,185,000**
REIMBURSABLE UTILITY COST	=	**$205,000**
NON-REIMBURSABLE UTILITY COST	=	**$40,000**
TOTAL SECTION COST	=	**$24,510,000**

RIGHT-OF-WAY REPORT FOR LOCATION STUDY

STATE PROJ. SR-248 @ I-65 COUNTY WILLIAMSON

FEDERAL PROJ. PROJ. DESC. SINGLE POINT INTERCHANGE

ESTIMATED RIGHT-OF-WAY COSTS

	SECTION 1	SECTION	SECTION	SECTION	SECTION
		ALT.	ALT.	ALT.	ALT.
COST ITEMS	EST. COST	EST. COST	EST. COST	EST. COST	EST. COST
LAND REQUIRED	$1,825,000				
ACRES	13				
IMPROVEMENTS	$1,000,000				
NUMBER	20				
DAMAGES	$275,000				
INCIDENTALS	$60,000				
RESIDENTIAL REL.	$0				
NUMBER	0				
BUS. & FARM REL.	$25,000				
NUMBER	1				
TOTAL EST. COST OF ROW	$3,185,000		$0	$0	$0

REMARKS:

PREPARED BY

SAIN ASSOCIATES, INC. 2/6/2006

NAME DATE

RECOMMENDED

NAME DATE

APPROVED

NAME DATE

SA# 01-184-8 (SPUI) ESTIMATED R.O.W. ACQUISITION COST

Improvement, Land, and Damage Figures

Land:	Acres	Cost/Acre	Total Cost	Rounded Total
	13	75000	975000	$975,000

Improvements:	Total Cost	Rounded Total
	1000000	$1,000,000
Subtotal		$1,975,000

Moving Cost Expenses

Description	Number	Cost/Ea.	Total Cost	Rounded Total
Business	1	25000	25000	$25,000

Damages:	Total Cost	Rounded Total
Loss of Parking	75000	
Loss of Access	200000	
Subtotal	275000	$275,000

Replacement Housing Cost

Description	Number	Cost/Ea.	Total Cost	Rounded Total
Owner Occupant	0	12000	0	$0

Incidental Expenses per Tract

Number	Cost/Ea.	Total Cost	Rounded Total
20	3000	60000	$60,000

Contingencies, including condemnation and time adjustment

$2,650,000 X 0.43 =	849250
Rounded for Estimate	$850,000

Total R.O.W. Estimate = **$3,185,000**

STATE OF TENNESSEE - DEPARTMENT OF TRANSPORTATION

UTILITY REPORT FOR LOCATION STUDY

ROUTE NO. SR-248 @ I-65 ALTERNATE SINGLE POINT

PROJECT NO. COUNTY WILLIAMSON

FROM

TO

UTILITY	TOTAL COST OF ADJUSTMENTS	REIMBURSABLE BY STATE
ELECTRIC	$32,250	$26,250
TELEPHONE	$140,000	$140,000
WATER	$43,225	$13,375
NATURAL GAS	$22,550	$22,550
SANITARY SEWER	$0	$0
TOTAL	$238,025	$202,175
ROUNDED TOTAL FOR ESTIMATE	$245,000	$205,000

REMARKS:

RAILROAD YES [ ] NO [X]

PREPARED BY: SAIN ASSOCIATES, INC.

DATE: 2/6/2006

SA# 01-184-8 (SPUI) REIMBURSABLE UTILITY RELOCATION COST

ELECTRIC

DESCRIPTION	NUMBER	COST/EA.	COST
TWO-PHASE LINE	10	2000.00	20000
SERVICE DROPS	5	1250.00	6250
SUBTOTAL			26250

TELEPHONE

DESCRIPTION	NUMBER	COST/FT	COST
Toll Cable (AT&T)	2000	70.00	140000
SUBTOTAL			140000

WATER

DESCRIPTION	LENGTH (FT.)	COST/L.F.	COST
6" DUCTILE IRON	625	17.00	10625
	NUMBER	COST/EA.	COST
Water Meters	5	550.00	2750
	NUMBER	COST/EA.	COST
FIRE HYDRANT	0	1250.00	0
SUBTOTAL			13375

NATURAL GAS

DESCRIPTION	LENGTH (FT.)	COST/L.F.	COST
2" Steel	2050	11.00	22550
SUBTOTAL			22550

TOTAL	202175
ROUNDED TOTAL	**$205,000**

NON-REIMBURSABLE UTILITY RELOCATION COST

ELECTRIC

DESCRIPTION	NUMBER	COST/EA.	COST
TWO-PHASE LINE	3	2000.00	6000
SUBTOTAL			6000

TELEPHONE

DESCRIPTION	NUMBER	COST/FT	COST
Toll Cable (AT&T)	0	58.00	0
SUBTOTAL			0

WATER

DESCRIPTION	LENGTH (FT.)	COST/L.F.	COST
6" DUCTILE IRON	1650	17.00	28050
	NUMBER	COST/EA.	COST
6" VALVE & BOX	1	550.00	550
	NUMBER	COST/EA.	COST
FIRE HYDRANT	1	1250.00	1250
SUBTOTAL			29850

NATURAL GAS

DESCRIPTION	LENGTH (FT.)	COST/L.F.	COST
2" Steel	0	11.00	0
SUBTOTAL			0

TOTAL	35850
ROUNDED TOTAL	**$40,000**

I-65 MAINLINE

OPERATIONAL ANALYSIS

2008 & 2028

HCS2000: Basic Freeway Segments Release 4.1b

Traffic Department
Sain Associates, Inc.

Operational Analysis

Analyst:	MJL
Agency or Company:	Sain Associates
Date Performed:	8/5/2003
Analysis Time Period:	AM DHV
Freeway/Direction:	NB I-65
From/To:	I-840 to SR 248
Jurisdiction:	TDOT
Analysis Year:	2008
Description: SR 248 @ I-65	

Flow Inputs and Adjustments

Volume, V	4500	veh/h
Peak-hour factor, PHF	0.95	
Peak 15-min volume, v15	1184	v
Trucks and buses	25	%
Recreational vehicles	0	%
Terrain type:	Rolling	
Grade	0.00	%
Segment length	0.00	mi
Trucks and buses PCE, ET	2.5	
Recreational vehicle PCE, ER	2.0	
Heavy vehicle adjustment, fHV	0.727	
Driver population factor, vp	1.00	
Flow rate, vp	3257	pc/h/ln

Speed Inputs and Adjustments

Lane width	12.0	ft
Right-shoulder lateral clearance	6.0	ft
Interchange density	0.50	interchange/mi
Number of lanes, N	2	
Free-flow speed:	Ideal	
FFS or BFFS	70.0	mi/h
Lane width adjustment, fLW	0.0	mi/h
Lateral clearance adjustment, fLC	0.0	mi/h
Interchange density adjustment, fID	0.0	mi/h
Number of lanes adjustment, fN	0.0	mi/h
Free-flow speed, FFS	70.0	mi/h
	Rural Freeway	

LOS and Performance Measures

Flow rate, vp	3257	pc/h/ln
Free-flow speed, FFS	70.0	mi/h
Average passenger-car speed, S		mi/h
Number of lanes, N	2	
Density, D		pc/mi/ln
Level of service, LOS	F	

Overall results are not computed when free-flow speed is less than 55 mph.

HCS2000: Basic Freeway Segments Release 4.1b

Traffic Department
Sain Associates, Inc.

Operational Analysis

Analyst:	MJL
Agency or Company:	Sain Associates
Date Performed:	8/5/2003
Analysis Time Period:	PM DHV
Freeway/Direction:	NB I-65
From/To:	I-840 to SR 248
Jurisdiction:	TDOT
Analysis Year:	2008
Description: SR 248 @ I-65	

Flow Inputs and Adjustments

Volume, V	2386	veh/h
Peak-hour factor, PHF	0.95	
Peak 15-min volume, v15	628	v
Trucks and buses	25	%
Recreational vehicles	0	%
Terrain type:	Rolling	
Grade	0.00	%
Segment length	0.00	mi
Trucks and buses PCE, ET	2.5	
Recreational vehicle PCE, ER	2.0	
Heavy vehicle adjustment, fHV	0.727	
Driver population factor, vp	1.00	
Flow rate, vp	1727	pc/h/ln

Speed Inputs and Adjustments

Lane width	12.0	ft
Right-shoulder lateral clearance	6.0	ft
Interchange density	0.50	interchange/mi
Number of lanes, N	2	
Free-flow speed:	Ideal	
FFS or BFFS	70.0	mi/h
Lane width adjustment, fLW	0.0	mi/h
Lateral clearance adjustment, fLC	0.0	mi/h
Interchange density adjustment, fID	0.0	mi/h
Number of lanes adjustment, fN	0.0	mi/h
Free-flow speed, FFS	70.0	mi/h
	Rural Freeway	

LOS and Performance Measures

Flow rate, vp	1727	pc/h/ln
Free-flow speed, FFS	70.0	mi/h
Average passenger-car speed, S	68.6	mi/h
Number of lanes, N	2	
Density, D	25.2	pc/mi/ln
Level of service, LOS	C	

Overall results are not computed when free-flow speed is less than 55 mph.

HCS2000: Basic Freeway Segments Release 4.1b

Traffic Department
Sain Associates, Inc.

Operational Analysis

Analyst:	MJL
Agency or Company:	Sain Associates
Date Performed:	8/5/2003
Analysis Time Period:	AM DHV
Freeway/Direction:	NB I-65
From/To:	I-840 to SR 248
Jurisdiction:	TDOT
Analysis Year:	2028
Description: SR 248 @ I-65	

Flow Inputs and Adjustments

Volume, V	6531	veh/h
Peak-hour factor, PHF	0.95	
Peak 15-min volume, v15	1719	v
Trucks and buses	25	%
Recreational vehicles	0	%
Terrain type:	Rolling	
Grade	0.00	%
Segment length	0.00	mi
Trucks and buses PCE, ET	2.5	
Recreational vehicle PCE, ER	2.0	
Heavy vehicle adjustment, fHV	0.727	
Driver population factor, vp	1.00	
Flow rate, vp	4726	pc/h/ln

Speed Inputs and Adjustments

Lane width	12.0	ft
Right-shoulder lateral clearance	6.0	ft
Interchange density	0.50	interchange/mi
Number of lanes, N	2	
Free-flow speed:	Ideal	
FFS or BFFS	70.0	mi/h
Lane width adjustment, fLW	0.0	mi/h
Lateral clearance adjustment, fLC	0.0	mi/h
Interchange density adjustment, fID	0.0*	mi/h
Number of lanes adjustment, fN	0.0	mi/h
Free-flow speed, FFS	70.0	mi/h
	Rural Freeway	

LOS and Performance Measures

Flow rate, vp	4726	pc/h/ln
Free-flow speed, FFS	70.0	mi/h
Average passenger-car speed, S		mi/h
Number of lanes, N	2	
Density, D		pc/mi/ln
Level of service, LOS	F	

Overall results are not computed when free-flow speed is less than 55 mph.

HCS2000: Basic Freeway Segments Release 4.1b

Traffic Department
Sain Associates, Inc.

Operational Analysis

Analyst:	MJL
Agency or Company:	Sain Associates
Date Performed:	8/5/2003
Analysis Time Period:	PM DHV
Freeway/Direction:	NB I-65
From/To:	I-840 to SR 248
Jurisdiction:	TDOT
Analysis Year:	2028
Description: SR 248 @ I-65	

Flow Inputs and Adjustments

Volume, V	3486	veh/h
Peak-hour factor, PHF	0.95	
Peak 15-min volume, v15	917	v
Trucks and buses	25	%
Recreational vehicles	0	%
Terrain type:	Rolling	
Grade	0.00	%
Segment length	0.00	mi
Trucks and buses PCE, ET	2.5	
Recreational vehicle PCE, ER	2.0	
Heavy vehicle adjustment, fHV	0.727	
Driver population factor, vp	1.00	
Flow rate, vp	2523	pc/h/ln

Speed Inputs and Adjustments

Lane width	12.0	ft
Right-shoulder lateral clearance	6.0	ft
Interchange density	0.50	interchange/mi
Number of lanes, N	2	
Free-flow speed:	Ideal	
FFS or BFFS	70.0	mi/h
Lane width adjustment, fLW	0.0	mi/h
Lateral clearance adjustment, fLC	0.0	mi/h
Interchange density adjustment, fID	0.0	mi/h
Number of lanes adjustment, fN	0.0	mi/h
Free-flow speed, FFS	70.0	mi/h
	Rural Freeway	

LOS and Performance Measures

Flow rate, vp	2523	pc/h/ln
Free-flow speed, FFS	70.0	mi/h
Average passenger-car speed, S		mi/h
Number of lanes, N	2	
Density, D		pc/mi/ln
Level of service, LOS	F	

Overall results are not computed when free-flow speed is less than 55 mph.

HCS2000: Basic Freeway Segments Release 4.1b

Traffic Department
Sain Associates, Inc.

Operational Analysis

Analyst:	MJL
Agency or Company:	Sain Associates
Date Performed:	8/5/2003
Analysis Time Period:	AM DHV
Freeway/Direction:	SB I-65
From/To:	I-840 to SR 248
Jurisdiction:	TDOT
Analysis Year:	2008
Description: SR 248 @ I-65	

Flow Inputs and Adjustments

Volume, V	1753	veh/h
Peak-hour factor, PHF	0.95	
Peak 15-min volume, v15	461	v
Trucks and buses	25	%
Recreational vehicles	0	%
Terrain type:	Rolling	
Grade	0.00	%
Segment length	0.00	mi
Trucks and buses PCE, ET	2.5	
Recreational vehicle PCE, ER	2.0	
Heavy vehicle adjustment, fHV	0.727	
Driver population factor, vp	1.00	
Flow rate, vp	1269	pc/h/ln

Speed Inputs and Adjustments

Lane width	12.0	ft
Right-shoulder lateral clearance	6.0	ft
Interchange density	0.50	interchange/mi
Number of lanes, N	2	
Free-flow speed:	Ideal	
FFS or BFFS	70.0	mi/h
Lane width adjustment, fLW	0.0	mi/h
Lateral clearance adjustment, fLC	0.0	mi/h
Interchange density adjustment, fID	0.0	mi/h
Number of lanes adjustment, fN	0.0	mi/h
Free-flow speed, FFS	70.0	mi/h
	Rural Freeway	

LOS and Performance Measures

Flow rate, vp	1269	pc/h/ln
Free-flow speed, FFS	70.0	mi/h
Average passenger-car speed, S	70.0	mi/h
Number of lanes, N	2	
Density, D	18.1	pc/mi/ln
Level of service, LOS	C	

Overall results are not computed when free-flow speed is less than 55 mph.

HCS2000: Basic Freeway Segments Release 4.1b

Traffic Department
Sain Associates, Inc.

Operational Analysis

Analyst:	MJL
Agency or Company:	Sain Associates
Date Performed:	8/5/2003
Analysis Time Period:	PM DHV
Freeway/Direction:	SB I-65
From/To:	I-840 to SR 248
Jurisdiction:	TDOT
Analysis Year:	2008
Description: SR 248 @ I-65	

Flow Inputs and Adjustments

Volume, V	4495	veh/h
Peak-hour factor, PHF	0.95	
Peak 15-min volume, v15	1183	v
Trucks and buses	25	%
Recreational vehicles	0	%
Terrain type:	Rolling	
Grade	0.00	%
Segment length	0.00	mi
Trucks and buses PCE, ET	2.5	
Recreational vehicle PCE, ER	2.0	
Heavy vehicle adjustment, fHV	0.727	
Driver population factor, vp	1.00	
Flow rate, vp	3253	pc/h/ln

Speed Inputs and Adjustments

Lane width	12.0	ft
Right-shoulder lateral clearance	6.0	ft
Interchange density	0.50	interchange/mi
Number of lanes, N	2	
Free-flow speed:	Ideal	
FFS or BFFS	70.0	mi/h
Lane width adjustment, fLW	0.0	mi/h
Lateral clearance adjustment, fLC	0.0	mi/h
Interchange density adjustment, fID	0.0	mi/h
Number of lanes adjustment, fN	0.0	mi/h
Free-flow speed, FFS	70.0	mi/h
	Rural Freeway	

LOS and Performance Measures

Flow rate, vp	3253	pc/h/ln
Free-flow speed, FFS	70.0	mi/h
Average passenger-car speed, S		mi/h
Number of lanes, N	2	
Density, D		pc/mi/ln
Level of service, LOS	F	

Overall results are not computed when free-flow speed is less than 55 mph.

HCS2000: Basic Freeway Segments Release 4.1b

Traffic Department
Sain Associates, Inc.

Operational Analysis

Analyst:	MJL
Agency or Company:	Sain Associates
Date Performed:	8/5/2003
Analysis Time Period:	AM DHV
Freeway/Direction:	SB I-65
From/To:	I-840 to SR 248
Jurisdiction:	TDOT
Analysis Year:	2028
Description: SR 248 @ I-65	

Flow Inputs and Adjustments

Volume, V	2364	veh/h
Peak-hour factor, PHF	0.95	
Peak 15-min volume, v15	622	v
Trucks and buses	25	%
Recreational vehicles	0	%
Terrain type:	Rolling	
Grade	0.00	%
Segment length	0.00	mi
Trucks and buses PCE, ET	2.5	
Recreational vehicle PCE, ER	2.0	
Heavy vehicle adjustment, fHV	0.727	
Driver population factor, vp	1.00	
Flow rate, vp	1711	pc/h/ln

Speed Inputs and Adjustments

Lane width	12.0	ft
Right-shoulder lateral clearance	6.0	ft
Interchange density	0.50	interchange/mi
Number of lanes, N	2	
Free-flow speed:	Ideal	
FFS or BFFS	70.0	mi/h
Lane width adjustment, fLW	0.0	mi/h
Lateral clearance adjustment, fLC	0.0	mi/h
Interchange density adjustment, fID	0.0	mi/h
Number of lanes adjustment, fN	0.0	mi/h
Free-flow speed, FFS	70.0	mi/h
	Rural Freeway	

LOS and Performance Measures

Flow rate, vp	1711	pc/h/ln
Free-flow speed, FFS	70.0	mi/h
Average passenger-car speed, S	68.7	mi/h
Number of lanes, N	2	
Density, D	24.9	pc/mi/ln
Level of service, LOS	C	

Overall results are not computed when free-flow speed is less than 55 mph.

HCS2000: Basic Freeway Segments Release 4.1b

Traffic Department
Sain Associates, Inc.

Operational Analysis

Analyst:	MJL
Agency or Company:	Sain Associates
Date Performed:	8/5/2003
Analysis Time Period:	PM DHV
Freeway/Direction:	SB I-65
From/To:	I-840 to SR 248
Jurisdiction:	TDOT
Analysis Year:	2028
Description: SR 248 @ I-65	

Flow Inputs and Adjustments

Volume, V	6532	veh/h
Peak-hour factor, PHF	0.95	
Peak 15-min volume, v15	1719	v
Trucks and buses	25	%
Recreational vehicles	0	%
Terrain type:	Rolling	
Grade	0.00	%
Segment length	0.00	mi
Trucks and buses PCE, ET	2.5	
Recreational vehicle PCE, ER	2.0	
Heavy vehicle adjustment, fHV	0.727	
Driver population factor, vp	1.00	
Flow rate, vp	4727	pc/h/ln

Speed Inputs and Adjustments

Lane width	12.0	ft
Right-shoulder lateral clearance	6.0	ft
Interchange density	0.50	interchange/mi
Number of lanes, N	2	
Free-flow speed:	Ideal	
FFS or BFFS	70.0	mi/h
Lane width adjustment, fLW	0.0	mi/h
Lateral clearance adjustment, fLC	0.0	mi/h
Interchange density adjustment, fID	0.0	mi/h
Number of lanes adjustment, fN	0.0	mi/h
Free-flow speed, FFS	70.0	mi/h
	Rural Freeway	

LOS and Performance Measures

Flow rate, vp	4727	pc/h/ln
Free-flow speed, FFS	70.0	mi/h
Average passenger-car speed, S		mi/h
Number of lanes, N	2	
Density, D		pc/mi/ln
Level of service, LOS	F	

Overall results are not computed when free-flow speed is less than 55 mph.

HCS2000: Basic Freeway Segments Release 4.1b

Traffic Department
Sain Associates, Inc.

Operational Analysis

Analyst:	MJL
Agency or Company:	Sain Associates
Date Performed:	8/5/2003
Analysis Time Period:	AM DHV
Freeway/Direction:	NB I-65
From/To:	SR 248 to SR 96
Jurisdiction:	TDOT
Analysis Year:	2008
Description: SR 248 @ I-65	

Flow Inputs and Adjustments

Volume, V	5060	veh/h
Peak-hour factor, PHF	0.95	
Peak 15-min volume, v15	1332	v
Trucks and buses	25	%
Recreational vehicles	0	%
Terrain type:	Rolling	
Grade	0.00	%
Segment length	0.00	mi
Trucks and buses PCE, ET	2.5	
Recreational vehicle PCE, ER	2.0	
Heavy vehicle adjustment, fHV	0.727	
Driver population factor, vp	1.00	
Flow rate, vp	3662	pc/h/ln

Speed Inputs and Adjustments

Lane width	12.0	ft
Right-shoulder lateral clearance	6.0	ft
Interchange density	0.50	interchange/mi
Number of lanes, N	2	
Free-flow speed:	Ideal	
FFS or BFFS	70.0	mi/h
Lane width adjustment, fLW	0.0	mi/h
Lateral clearance adjustment, fLC	0.0	mi/h
Interchange density adjustment, fID	0.0	mi/h
Number of lanes adjustment, fN	0.0	mi/h
Free-flow speed, FFS	70.0	mi/h
	Rural Freeway	

LOS and Performance Measures

Flow rate, vp	3662	pc/h/ln
Free-flow speed, FFS	70.0	mi/h
Average passenger-car speed, S		mi/h
Number of lanes, N	2	
Density, D		pc/mi/ln
Level of service, LOS	F	

Overall results are not computed when free-flow speed is less than 55 mph.

HCS2000: Basic Freeway Segments Release 4.1b

Traffic Department
Sain Associates, Inc.

Operational Analysis

Analyst:	MJL
Agency or Company:	Sain Associates
Date Performed:	8/5/2003
Analysis Time Period:	PM DHV
Freeway/Direction:	NB I-65
From/To:	SR 248 to SR 96
Jurisdiction:	TDOT
Analysis Year:	2008
Description: SR 248 @ I-65	

Flow Inputs and Adjustments

Volume, V	3014	veh/h
Peak-hour factor, PHF	0.95	
Peak 15-min volume, v15	793	v
Trucks and buses	25	%
Recreational vehicles	0	%
Terrain type:	Rolling	
Grade	0.00	%
Segment length	0.00	mi
Trucks and buses PCE, ET	2.5	
Recreational vehicle PCE, ER	2.0	
Heavy vehicle adjustment, fHV	0.727	
Driver population factor, vp	1.00	
Flow rate, vp	2181	pc/h/ln

Speed Inputs and Adjustments

Lane width	12.0	ft
Right-shoulder lateral clearance	6.0	ft
Interchange density	0.50	interchange/mi
Number of lanes, N	2	
Free-flow speed:	Ideal	
FFS or BFFS	70.0	mi/h
Lane width adjustment, fLW	0.0	mi/h
Lateral clearance adjustment, fLC	0.0	mi/h
Interchange density adjustment, fID	0.0	mi/h
Number of lanes adjustment, fN	0.0	mi/h
Free-flow speed, FFS	70.0	mi/h
	Rural Freeway	

LOS and Performance Measures

Flow rate, vp	2181	pc/h/ln
Free-flow speed, FFS	70.0	mi/h
Average passenger-car speed, S	60.6	mi/h
Number of lanes, N	2	
Density, D	36.0	pc/mi/ln
Level of service, LOS	E	

Overall results are not computed when free-flow speed is less than 55 mph.

HCS2000: Basic Freeway Segments Release 4.1b

Traffic Department
Sain Associates, Inc.

Operational Analysis

Analyst:	MJL
Agency or Company:	Sain Associates
Date Performed:	8/5/2003
Analysis Time Period:	AM DHV
Freeway/Direction:	NB I-65
From/To:	SR 248 to SR 96
Jurisdiction:	TDOT
Analysis Year:	2028
Description: SR 248 @ I-65	

Flow Inputs and Adjustments

Volume, V	7284	veh/h
Peak-hour factor, PHF	0.95	
Peak 15-min volume, v15	1917	v
Trucks and buses	25	%
Recreational vehicles	0	%
Terrain type:	Rolling	
Grade	0.00	%
Segment length	0.00	mi
Trucks and buses PCE, ET	2.5	
Recreational vehicle PCE, ER	2.0	
Heavy vehicle adjustment, fHV	0.727	
Driver population factor, vp	1.00	
Flow rate, vp	5271	pc/h/ln

Speed Inputs and Adjustments

Lane width	12.0	ft
Right-shoulder lateral clearance	6.0	ft
Interchange density	0.50	interchange/mi
Number of lanes, N	2	
Free-flow speed:	Ideal	
FFS or BFFS	70.0	mi/h
Lane width adjustment, fLW	0.0	mi/h
Lateral clearance adjustment, fLC	0.0	mi/h
Interchange density adjustment, fID	0.0	mi/h
Number of lanes adjustment, fN	0.0	mi/h
Free-flow speed, FFS	70.0	mi/h
	Rural Freeway	

LOS and Performance Measures

Flow rate, vp	5271	pc/h/ln
Free-flow speed, FFS	70.0	mi/h
Average passenger-car speed, S		mi/h
Number of lanes, N	2	
Density, D		pc/mi/ln
Level of service, LOS	F	

Overall results are not computed when free-flow speed is less than 55 mph.

HCS2000: Basic Freeway Segments Release 4.1b

Traffic Department
Sain Associates, Inc.

Operational Analysis

Analyst:	MJL
Agency or Company:	Sain Associates
Date Performed:	8/5/2003
Analysis Time Period:	PM DHV
Freeway/Direction:	NB I-65
From/To:	SR 248 to SR 96
Jurisdiction:	TDOT
Analysis Year:	2028
Description: SR 248 @ I-65	

Flow Inputs and Adjustments

Volume, V	4622	veh/h
Peak-hour factor, PHF	0.95	
Peak 15-min volume, v15	1216	v
Trucks and buses	25	%
Recreational vehicles	0	%
Terrain type:	Rolling	
Grade	0.00	%
Segment length	0.00	mi
Trucks and buses PCE, ET	2.5	
Recreational vehicle PCE, ER	2.0	
Heavy vehicle adjustment, fHV	0.727	
Driver population factor, vp	1.00	
Flow rate, vp	3345	pc/h/ln

Speed Inputs and Adjustments

Lane width	12.0	ft
Right-shoulder lateral clearance	6.0	ft
Interchange density	0.50	interchange/mi
Number of lanes, N	2	
Free-flow speed:	Ideal	
FFS or BFFS	70.0	mi/h
Lane width adjustment, fLW	0.0	mi/h
Lateral clearance adjustment, fLC	0.0	mi/h
Interchange density adjustment, fID	0.0	mi/h
Number of lanes adjustment, fN	0.0	mi/h
Free-flow speed, FFS	70.0	mi/h
	Rural Freeway	

LOS and Performance Measures

Flow rate, vp	3345	pc/h/ln
Free-flow speed, FFS	70.0	mi/h
Average passenger-car speed, S		mi/h
Number of lanes, N	2	
Density, D		pc/mi/ln
Level of service, LOS	F	

Overall results are not computed when free-flow speed is less than 55 mph.

HCS2000: Basic Freeway Segments Release 4.1b

Traffic Department
Sain Associates, Inc.

Operational Analysis

Analyst:	MJL
Agency or Company:	Sain Associates
Date Performed:	8/5/2003
Analysis Time Period:	AM DHV
Freeway/Direction:	SB I-65
From/To:	SR 248 to SR 96
Jurisdiction:	TDOT
Analysis Year:	2008
Description: SR 248 @ I-65	

Flow Inputs and Adjustments

Volume, V	2243	veh/h
Peak-hour factor, PHF	0.95	
Peak 15-min volume, v15	590	v
Trucks and buses	25	%
Recreational vehicles	0	%
Terrain type:	Rolling	
Grade	0.00	%
Segment length	0.00	mi
Trucks and buses PCE, ET	2.5	
Recreational vehicle PCE, ER	2.0	
Heavy vehicle adjustment, fHV	0.727	
Driver population factor, vp	1.00	
Flow rate, vp	1623	pc/h/ln

Speed Inputs and Adjustments

Lane width	12.0	ft
Right-shoulder lateral clearance	6.0	ft
Interchange density	0.50	interchange/mi
Number of lanes, N	2	
Free-flow speed:	Ideal	
FFS or BFFS	70.0	mi/h
Lane width adjustment, fLW	0.0	mi/h
Lateral clearance adjustment, fLC	0.0	mi/h
Interchange density adjustment, fID	0.0	mi/h
Number of lanes adjustment, fN	0.0	mi/h
Free-flow speed, FFS	70.0	mi/h
	Rural Freeway	

LOS and Performance Measures

Flow rate, vp	1623	pc/h/ln
Free-flow speed, FFS	70.0	mi/h
Average passenger-car speed, S	69.3	mi/h
Number of lanes, N	2	
Density, D	23.4	pc/mi/ln
Level of service, LOS	C	

Overall results are not computed when free-flow speed is less than 55 mph.

HCS2000: Basic Freeway Segments Release 4.1b

Traffic Department
Sain Associates, Inc.

Operational Analysis

Analyst:	MJL
Agency or Company:	Sain Associates
Date Performed:	8/5/2003
Analysis Time Period:	PM DHV
Freeway/Direction:	SB I-65
From/To:	SR 248 to SR 96
Jurisdiction:	TDOT
Analysis Year:	2008
Description: SR 248 @ I-65	

Flow Inputs and Adjustments

Volume, V	4918	veh/h
Peak-hour factor, PHF	0.95	
Peak 15-min volume, v15	1294	v
Trucks and buses	25	%
Recreational vehicles	0	%
Terrain type:	Rolling	
Grade	0.00	%
Segment length	0.00	mi
Trucks and buses PCE, ET	2.5	
Recreational vehicle PCE, ER	2.0	
Heavy vehicle adjustment, fHV	0.727	
Driver population factor, vp	1.00	
Flow rate, vp	3559	pc/h/ln

Speed Inputs and Adjustments

Lane width	12.0	ft
Right-shoulder lateral clearance	6.0	ft
Interchange density	0.50	interchange/mi
Number of lanes, N	2	
Free-flow speed:	Ideal	
FFS or BFFS	70.0	mi/h
Lane width adjustment, fLW	0.0	mi/h
Lateral clearance adjustment, fLC	0.0	mi/h
Interchange density adjustment, fID	0.0	mi/h
Number of lanes adjustment, fN	0.0	mi/h
Free-flow speed, FFS	70.0	mi/h
	Rural Freeway	

LOS and Performance Measures

Flow rate, vp	3559	pc/h/ln
Free-flow speed, FFS	70.0	mi/h
Average passenger-car speed, S		mi/h
Number of lanes, N	2	
Density, D		pc/mi/ln
Level of service, LOS	F	

Overall results are not computed when free-flow speed is less than 55 mph.

HCS2000: Basic Freeway Segments Release 4.1b

Traffic Department
Sain Associates, Inc.

Operational Analysis

Analyst:	MJL
Agency or Company:	Sain Associates
Date Performed:	8/5/2003
Analysis Time Period:	AM DHV
Freeway/Direction:	SB I-65
From/To:	SR 248 to SR 96
Jurisdiction:	TDOT
Analysis Year:	2028
Description: SR 248 @ I-65	

Flow Inputs and Adjustments

Volume, V	3273	veh/h
Peak-hour factor, PHF	0.95	
Peak 15-min volume, v15	861	v
Trucks and buses	25	%
Recreational vehicles	0	%
Terrain type:	Rolling	
Grade	0.00	%
Segment length	0.00	mi
Trucks and buses PCE, ET	2.5	
Recreational vehicle PCE, ER	2.0	
Heavy vehicle adjustment, fHV	0.727	
Driver population factor, vp	1.00	
Flow rate, vp	2369	pc/h/ln

Speed Inputs and Adjustments

Lane width	12.0	ft
Right-shoulder lateral clearance	6.0	ft
Interchange density	0.50	interchange/mi
Number of lanes, N	2	
Free-flow speed:	Ideal	
FFS or BFFS	70.0	mi/h
Lane width adjustment, fLW	0.0	mi/h
Lateral clearance adjustment, fLC	0.0	mi/h
Interchange density adjustment, fID	0.0	mi/h
Number of lanes adjustment, fN	0.0	mi/h
Free-flow speed, FFS	70.0	mi/h
	Rural Freeway	

LOS and Performance Measures

Flow rate, vp	2369	pc/h/ln
Free-flow speed, FFS	70.0	mi/h
Average passenger-car speed, S	54.5	mi/h
Number of lanes, N	2	
Density, D	43.4	pc/mi/ln
Level of service, LOS	E	

Overall results are not computed when free-flow speed is less than 55 mph.

HCS2000: Basic Freeway Segments Release 4.1b

Traffic Department
Sain Associates, Inc.

Operational Analysis

Analyst:	MJL
Agency or Company:	Sain Associates
Date Performed:	8/5/2003
Analysis Time Period:	PM DHV
Freeway/Direction:	SB I-65
From/To:	SR 248 to SR 96
Jurisdiction:	TDOT
Analysis Year:	2028
Description: SR 248 @ I-65	

Flow Inputs and Adjustments

Volume, V	7125	veh/h
Peak-hour factor, PHF	0.95	
Peak 15-min volume, v15	1875	v
Trucks and buses	25	%
Recreational vehicles	0	%
Terrain type:	Rolling	
Grade	0.00	%
Segment length	0.00	mi
Trucks and buses PCE, ET	2.5	
Recreational vehicle PCE, ER	2.0	
Heavy vehicle adjustment, fHV	0.727	
Driver population factor, vp	1.00	
Flow rate, vp	5156	pc/h/ln

Speed Inputs and Adjustments

Lane width	12.0	ft
Right-shoulder lateral clearance	6.0	ft
Interchange density	0.50	interchange/mi
Number of lanes, N	2	
Free-flow speed:	Ideal	
FFS or BFFS	70.0	mi/h
Lane width adjustment, fLW	0.0	mi/h
Lateral clearance adjustment, fLC	0.0	mi/h
Interchange density adjustment, fID	0.0	mi/h
Number of lanes adjustment, fN	0.0	mi/h
Free-flow speed, FFS	70.0	mi/h
	Rural Freeway	

LOS and Performance Measures

Flow rate, vp	5156	pc/h/ln
Free-flow speed, FFS	70.0	mi/h
Average passenger-car speed, S		mi/h
Number of lanes, N	2	
Density, D		pc/mi/ln
Level of service, LOS	F	

Overall results are not computed when free-flow speed is less than 55 mph.

HCS2000: Basic Freeway Segments Release 4.1b

Traffic Department
Sain Associates, Inc.

Operational Analysis

Analyst:	MJL
Agency or Company:	Sain Associates
Date Performed:	9/2/2003
Analysis Time Period:	FUTURE AM DHV
Freeway/Direction:	NB I-65
From/To:	I-840 to SR 248
Jurisdiction:	TDOT
Analysis Year:	2028 - Future Improvements
Description: SR 248 @ I-65	

Flow Inputs and Adjustments

Volume, V	6531	veh/h
Peak-hour factor, PHF	0.95	
Peak 15-min volume, v15	1719	v
Trucks and buses	25	%
Recreational vehicles	0	%
Terrain type:	Rolling	
Grade	0.00	%
Segment length	0.00	mi
Trucks and buses PCE, ET	2.5	
Recreational vehicle PCE, ER	2.0	
Heavy vehicle adjustment, fHV	0.727	
Driver population factor, vp	1.00	
Flow rate, vp	2363	pc/h/ln

Speed Inputs and Adjustments

Lane width	12.0	ft
Right-shoulder lateral clearance	6.0	ft
Interchange density	0.50	interchange/mi
Number of lanes, N	4	
Free-flow speed:	Ideal	
FFS or BFFS	70.0	mi/h
Lane width adjustment, fLW	0.0	mi/h
Lateral clearance adjustment, fLC	0.0	mi/h
Interchange density adjustment, fID	0.0	mi/h
Number of lanes adjustment, fN	0.0	mi/h
Free-flow speed, FFS	70.0	mi/h
	Rural Freeway	

LOS and Performance Measures

Flow rate, vp	2363	pc/h/ln
Free-flow speed, FFS	70.0	mi/h
Average passenger-car speed, S	54.8	mi/h
Number of lanes, N	4	
Density, D	43.2	pc/mi/ln
Level of service, LOS	E	

Overall results are not computed when free-flow speed is less than 55 mph.

HCS2000: Basic Freeway Segments Release 4.1b

Traffic Department
Sain Associates, Inc.

Operational Analysis

Analyst:	MJL
Agency or Company:	Sain Associates
Date Performed:	9/2/2003
Analysis Time Period:	FUTURE PM DHV
Freeway/Direction:	NB I-65
From/To:	I-840 to SR 248
Jurisdiction:	TDOT
Analysis Year:	2028 - Future Improvements
Description: SR 248 @ I-65	

Flow Inputs and Adjustments

Volume, V	3486	veh/h
Peak-hour factor, PHF	0.95	
Peak 15-min volume, v15	917	v
Trucks and buses	25	%
Recreational vehicles	0	%
Terrain type:	Rolling	
Grade	0.00	%
Segment length	0.00	mi
Trucks and buses PCE, ET	2.5	
Recreational vehicle PCE, ER	2.0	
Heavy vehicle adjustment, fHV	0.727	
Driver population factor, vp	1.00	
Flow rate, vp	1261	pc/h/ln

Speed Inputs and Adjustments

Lane width	12.0	ft
Right-shoulder lateral clearance	6.0	ft
Interchange density	0.50	interchange/mi
Number of lanes, N	4	
Free-flow speed:	Ideal	
FFS or BFFS	70.0	mi/h
Lane width adjustment, fLW	0.0	mi/h
Lateral clearance adjustment, fLC	0.0	mi/h
Interchange density adjustment, fID	0.0	mi/h
Number of lanes adjustment, fN	0.0	mi/h
Free-flow speed, FFS	70.0	mi/h
	Rural Freeway	

LOS and Performance Measures

Flow rate, vp	1261	pc/h/ln
Free-flow speed, FFS	70.0	mi/h
Average passenger-car speed, S	70.0	mi/h
Number of lanes, N	4	
Density, D	18.0+	pc/mi/ln
Level of service, LOS	C	

Overall results are not computed when free-flow speed is less than 55 mph.

HCS2000: Basic Freeway Segments Release 4.1b

Traffic Department
Sain Associates, Inc.

Operational Analysis

Analyst:	MJL
Agency or Company:	Sain Associates
Date Performed:	9/2/2003
Analysis Time Period:	FUTURE AM DHV
Freeway/Direction:	SB I-65
From/To:	I-840 to SR 248
Jurisdiction:	TDOT
Analysis Year:	2028 - Future Improvements
Description: SR 248 @ I-65	

Flow Inputs and Adjustments

Volume, V	2364	veh/h
Peak-hour factor, PHF	0.95	
Peak 15-min volume, v15	622	v
Trucks and buses	25	%
Recreational vehicles	0	%
Terrain type:	Rolling	
Grade	0.00	%
Segment length	0.00	mi
Trucks and buses PCE, ET	2.5	
Recreational vehicle PCE, ER	2.0	
Heavy vehicle adjustment, fHV	0.727	
Driver population factor, vp	1.00	
Flow rate, vp	855	pc/h/ln

Speed Inputs and Adjustments

Lane width	12.0	ft
Right-shoulder lateral clearance	6.0	ft
Interchange density	0.50	interchange/mi
Number of lanes, N	4	
Free-flow speed:	Ideal	
FFS or BFFS	70.0	mi/h
Lane width adjustment, fLW	0.0	mi/h
Lateral clearance adjustment, fLC	0.0	mi/h
Interchange density adjustment, fID	0.0	mi/h
Number of lanes adjustment, fN	0.0	mi/h
Free-flow speed, FFS	70.0	mi/h
	Rural Freeway	

LOS and Performance Measures

Flow rate, vp	855	pc/h/ln
Free-flow speed, FFS	70.0	mi/h
Average passenger-car speed, S	70.0	mi/h
Number of lanes, N	4	
Density, D	12.2	pc/mi/ln
Level of service, LOS	B	

Overall results are not computed when free-flow speed is less than 55 mph.

HCS2000: Basic Freeway Segments Release 4.1b

Traffic Department
Sain Associates, Inc.

Operational Analysis

Analyst:	MJL
Agency or Company:	Sain Associates
Date Performed:	9/2/2003
Analysis Time Period:	FUTURE PM DHV
Freeway/Direction:	SB I-65
From/To:	I-840 to SR 248
Jurisdiction:	TDOT
Analysis Year:	2028 - Future Improvements
Description: SR 248 @ I-65	

Flow Inputs and Adjustments

Volume, V	6532	veh/h
Peak-hour factor, PHF	0.95	
Peak 15-min volume, v15	1719	v
Trucks and buses	25	%
Recreational vehicles	0	%
Terrain type:	Rolling	
Grade	0.00	%
Segment length	0.00	mi
Trucks and buses PCE, ET	2.5	
Recreational vehicle PCE, ER	2.0	
Heavy vehicle adjustment, fHV	0.727	
Driver population factor, vp	1.00	
Flow rate, vp	2364	pc/h/ln

Speed Inputs and Adjustments

Lane width	12.0	ft
Right-shoulder lateral clearance	6.0	ft
Interchange density	0.50	interchange/mi
Number of lanes, N	4	
Free-flow speed:	Ideal	
FFS or BFFS	70.0	mi/h
Lane width adjustment, fLW	0.0	mi/h
Lateral clearance adjustment, fLC	0.0	mi/h
Interchange density adjustment, fID	0.0	mi/h
Number of lanes adjustment, fN	0.0	mi/h
Free-flow speed, FFS	70.0	mi/h
	Rural Freeway	

LOS and Performance Measures

Flow rate, vp	2364	pc/h/ln
Free-flow speed, FFS	70.0	mi/h
Average passenger-car speed, S	54.7	mi/h
Number of lanes, N	4	
Density, D	43.2	pc/mi/ln
Level of service, LOS	E	

Overall results are not computed when free-flow speed is less than 55 mph.

FUTURE sr248tosr96 NB-AM(2028)Peak.txt

HCS2000: Basic Freeway Segments Release 4.1b

Traffic Department
Sain Associates, Inc.

Operational Analysis

Analyst:	MJL
Agency or Company:	Sain Associates
Date Performed:	9/2/2003
Analysis Time Period:	FUTURE AM DHV
Freeway/Direction:	NB I-65
From/To:	SR 248 to SR 96
Jurisdiction:	TDOT
Analysis Year:	2028 - Future Improvements
Description: SR 248 @ I-65	

Flow Inputs and Adjustments

Volume, V	7284	veh/h
Peak-hour factor, PHF	0.95	
Peak 15-min volume, v15	1917	v
Trucks and buses	25	%
Recreational vehicles	0	%
Terrain type:	Rolling	
Grade	0.00	%
Segment length	0.00	mi
Trucks and buses PCE, ET	2.5	
Recreational vehicle PCE, ER	2.0	
Heavy vehicle adjustment, fHV	0.727	
Driver population factor, vp	1.00	
Flow rate, vp	2636	pc/h/ln

Speed Inputs and Adjustments

Lane width	12.0	ft
Right-shoulder lateral clearance	6.0	ft
Interchange density	0.50	interchange/mi
Number of lanes, N	4	
Free-flow speed:	Ideal	
FFS or BFFS	70.0	mi/h
Lane width adjustment, fLW	0.0	mi/h
Lateral clearance adjustment, fLC	0.0	mi/h
Interchange density adjustment, fID	0.0	mi/h
Number of lanes adjustment, fN	0.0	mi/h
Free-flow speed, FFS	70.0	mi/h
	Rural Freeway	

LOS and Performance Measures

Flow rate, vp	2636	pc/h/ln
Free-flow speed, FFS	70.0	mi/h
Average passenger-car speed, S		mi/h
Number of lanes, N	4	
Density, D		pc/mi/ln
Level of service, LOS	F	

Overall results are not computed when free-flow speed is less than 55 mph.

FUTURE sr248tosr96 NB-PM(2028)Peak.txt

HCS2000: Basic Freeway Segments Release 4.1b

Traffic Department
Sain Associates, Inc.

Operational Analysis

Analyst:	MJL
Agency or Company:	Sain Associates
Date Performed:	8/5/2003
Analysis Time Period:	FUTURE PM DHV
Freeway/Direction:	NB I-65
From/To:	SR 248 to SR 96
Jurisdiction:	TDOT
Analysis Year:	2028 - Future Improvements
Description: SR 248 @ I-65	

Flow Inputs and Adjustments

Volume, V	4622	veh/h
Peak-hour factor, PHF	0.95	
Peak 15-min volume, v15	1216	v
Trucks and buses	25	%
Recreational vehicles	0	%
Terrain type:	Rolling	
Grade	0.00	%
Segment length	0.00	mi
Trucks and buses PCE, ET	2.5	
Recreational vehicle PCE, ER	2.0	
Heavy vehicle adjustment, fHV	0.727	
Driver population factor, vp	1.00	
Flow rate, vp	1672	pc/h/ln

Speed Inputs and Adjustments

Lane width	12.0	ft
Right-shoulder lateral clearance	6.0	ft
Interchange density	0.50	interchange/mi
Number of lanes, N	4	
Free-flow speed:	Ideal	
FFS or BFFS	70.0	mi/h
Lane width adjustment, fLW	0.0	mi/h
Lateral clearance adjustment, fLC	0.0	mi/h
Interchange density adjustment, fID	0.0	mi/h
Number of lanes adjustment, fN	0.0	mi/h
Free-flow speed, FFS	70.0	mi/h
	Rural Freeway	

LOS and Performance Measures

Flow rate, vp	1672	pc/h/ln
Free-flow speed, FFS	70.0	mi/h
Average passenger-car speed, S	69.0	mi/h
Number of lanes, N	4	
Density, D	24.2	pc/mi/ln
Level of service, LOS	C	

Overall results are not computed when free-flow speed is less than 55 mph.

HCS2000: Basic Freeway Segments Release 4.1b

Traffic Department
Sain Associates, Inc.

Operational Analysis

Analyst:	MJL
Agency or Company:	Sain Associates
Date Performed:	8/5/2003
Analysis Time Period:	FUTURE PM DHV
Freeway/Direction:	SB I-65
From/To:	SR 248 to SR 96
Jurisdiction:	TDOT
Analysis Year:	2028 - Future Improvements
Description: SR 248 @ I-65	

Flow Inputs and Adjustments

Volume, V	7125	veh/h
Peak-hour factor, PHF	0.95	
Peak 15-min volume, v15	1875	v
Trucks and buses	25	%
Recreational vehicles	0	%
Terrain type:	Rolling	
Grade	0.00	%
Segment length	0.00	mi
Trucks and buses PCE, ET	2.5	
Recreational vehicle PCE, ER	2.0	
Heavy vehicle adjustment, fHV	0.727	
Driver population factor, vp	1.00	
Flow rate, vp	2578	pc/h/ln

Speed Inputs and Adjustments

Lane width	12.0	ft
Right-shoulder lateral clearance	6.0	ft
Interchange density	0.50	interchange/mi
Number of lanes, N	4	
Free-flow speed:	Ideal	
FFS or BFFS	70.0	mi/h
Lane width adjustment, fLW	0.0	mi/h
Lateral clearance adjustment, fLC	0.0	mi/h
Interchange density adjustment, fID	0.0	mi/h
Number of lanes adjustment, fN	0.0	mi/h
Free-flow speed, FFS	70.0	mi/h
	Rural Freeway	

LOS and Performance Measures

Flow rate, vp	2578	pc/h/ln
Free-flow speed, FFS	70.0	mi/h
Average passenger-car speed, S		mi/h
Number of lanes, N	4	
Density, D		pc/mi/ln
Level of service, LOS	F	

Overall results are not computed when free-flow speed is less than 55 mph.

HCS2000: Basic Freeway Segments Release 4.1b

Traffic Department
Sain Associates, Inc.

Operational Analysis

Analyst:	MJL
Agency or Company:	Sain Associates
Date Performed:	9/2/2003
Analysis Time Period:	FUTURE AM DHV
Freeway/Direction:	SB I-65
From/To:	SR 248 to SR 96
Jurisdiction:	TDOT
Analysis Year:	2028 - Future Improvements
Description: SR 248 @ I-65	

Flow Inputs and Adjustments

Volume, V	3273	veh/h
Peak-hour factor, PHF	0.95	
Peak 15-min volume, v15	861	v
Trucks and buses	25	%
Recreational vehicles	0	%
Terrain type:	Rolling	
Grade	0.00	%
Segment length	0.00	mi
Trucks and buses PCE, ET	2.5	
Recreational vehicle PCE, ER	2.0	
Heavy vehicle adjustment, fHV	0.727	
Driver population factor, vp	1.00	
Flow rate, vp	1184	pc/h/ln

Speed Inputs and Adjustments

Lane width	12.0	ft
Right-shoulder lateral clearance	6.0	ft
Interchange density	0.50	interchange/mi
Number of lanes, N	4	
Free-flow speed:	Ideal	
FFS or BFFS	70.0	mi/h
Lane width adjustment, fLW	0.0	mi/h
Lateral clearance adjustment, fLC	0.0	mi/h
Interchange density adjustment, fID	0.0	mi/h
Number of lanes adjustment, fN	0.0	mi/h
Free-flow speed, FFS	70.0	mi/h
	Rural Freeway	

LOS and Performance Measures

Flow rate, vp	1184	pc/h/ln
Free-flow speed, FFS	70.0	mi/h
Average passenger-car speed, S	70.0	mi/h
Number of lanes, N	4	
Density, D	16.9	pc/mi/ln
Level of service, LOS	B	

Overall results are not computed when free-flow speed is less than 55 mph.

I-65 RAMPS

AT

SR 248

NORTHBOUND AND SOUTHBOUND
MERGE / DIVERGE ANALYSIS

AM/PM DHV

2008 & 2028

HCS2000: Ramps and Ramp Junctions Release 4.1d

Traffic Department
Sain Associates, Inc.

Diverge Analysis

Analyst:	MJL
Agency/Co.:	Sain Associates
Date performed:	1/12/05
Analysis time period:	AM DHV
Freeway/Dir of Travel:	NB I-65
Junction:	@ SR 248
Jurisdiction:	TDOT
Analysis Year:	2008 - Existing Layout
Description:	I-65 at SR 248

Freeway Data

Type of analysis	Diverge	
Number of lanes in freeway	2	
Free-flow speed on freeway	70.0	mph
Volume on freeway	4500	vph

Off Ramp Data

Side of freeway	Right	
Number of lanes in ramp	1	
Free-Flow speed on ramp	40.0	mph
Volume on ramp	504	vph
Length of first accel/decel lane	580	ft
Length of second accel/decel lane		ft

Adjacent Ramp Data (if one exists)

Does adjacent ramp exist?	Yes	
Volume on adjacent ramp	1064	vph
Position of adjacent ramp	Downstream	
Type of adjacent ramp	On	
Distance to adjacent ramp	1830	ft

Conversion to pc/h Under Base Conditions

Junction Components	Freeway		Ramp		Adjacent Ramp		
Volume, V (vph)	4500		504		1064		vph
Peak-hour factor, PHF	0.95		0.95		0.95		
Peak 15-min volume, v15	1184		133		280		v
Trucks and buses	25		25		4		%
Recreational vehicles	0		0		0		%
Terrain type:	Level		Level		Level		
Grade	0.00	%	0.00	%	0.00	%	
Length	0.00	mi	0.00	mi	0.00	mi	
Trucks and buses PCE, ET	1.5		1.5		1.5		
Recreational vehicle PCE, ER	1.2		1.2		1.2		
Heavy vehicle adjustment, fHV	0.889		0.889		0.980		
Driver population factor, fP	1.00		1.00		1.00		
Flow rate, vp	5329		597		1142		pcph

Estimation of V12 Diverge Areas

L_{EQ} = (Equation 25-8 or 25-9)

P_{FD} = 1.000 Using Equation 0

$v_{12} = v_R + (v_F - v_R) P_{FD}$ = 5329 pc/h

Capacity Checks

	Actual	Maximum	LOS F?
$v_{Fi} = v_F$	5329	4800	Yes
v_{12}	5329	4400	Yes
$v_{FO} = v_F - v_R$	4732	4800	No
v_R	597	2100	No

Level of Service Determination (if not F)

Density, $D_R = 4.252 + 0.0086\, v_{12} - 0.009\, L_D$ = 44.9 pc/mi/ln

Level of service for ramp-freeway junction areas of influence F

Speed Estimation

Intermediate speed variable, D_S = 0.417

Space mean speed in ramp influence area, S_R = 58.3 mph

Space mean speed in outer lanes, S_O = N/A mph

Space mean speed for all vehicles, S = 58.3 mph

HCS2000: Ramps and Ramp Junctions Release 4.1d

Traffic Department
Sain Associates, Inc.

Diverge Analysis

Analyst:	MJL
Agency/Co.:	Sain Associates
Date performed:	1/12/05
Analysis time period:	PM DHV
Freeway/Dir of Travel:	NB I-65
Junction:	@ SR 248
Jurisdiction:	TDOT
Analysis Year:	2008 - Existing Layout
Description:	I-65 at SR 248

Freeway Data

Type of analysis	Diverge	
Number of lanes in freeway	2	
Free-flow speed on freeway	70.0	mph
Volume on freeway	2386	vph

Off Ramp Data

Side of freeway	Right	
Number of lanes in ramp	1	
Free-Flow speed on ramp	40.0	mph
Volume on ramp	528	vph
Length of first accel/decel lane	580	ft
Length of second accel/decel lane		ft

Adjacent Ramp Data (if one exists)

Does adjacent ramp exist?	Yes	
Volume on adjacent ramp	1156	vph
Position of adjacent ramp	Downstream	
Type of adjacent ramp	On	
Distance to adjacent ramp	1830	ft

Conversion to pc/h Under Base Conditions

Junction Components	Freeway		Ramp		Adjacent Ramp		
Volume, V (vph)	2386		528		1156		vph
Peak-hour factor, PHF	0.95		0.95		0.95		
Peak 15-min volume, v15	628		139		304		v
Trucks and buses	25		25		6		%
Recreational vehicles	0		0		0		%
Terrain type:	Level		Level		Level		
Grade	0.00	%	0.00	%	0.00	%	
Length	0.00	mi	0.00	mi	0.00	mi	
Trucks and buses PCE, ET	1.5		1.5		1.5		
Recreational vehicle PCE, ER	1.2		1.2		1.2		
Heavy vehicle adjustment, fHV	0.889		0.889		0.971		
Driver population factor, fP	1.00		1.00		1.00		
Flow rate, vp	2826		625		1253		pcph

Estimation of V12 Diverge Areas

L_{EQ} = (Equation 25-8 or 25-9)

P_{FD} = 1.000 Using Equation 0

$v_{12} = v_R + (v_F - v_R) P_{FD}$ = 2826 pc/h

Capacity Checks

	Actual	Maximum	LOS F?
$v_{Fi} = v_F$	2826	4800	No
v_{12}	2826	4400	No
$v_{FO} = v_F - v_R$	2201	4800	No
v_R	625	2100	No

Level of Service Determination (if not F)

Density, $D_R = 4.252 + 0.0086\, v_{12} - 0.009\, L_D$ = 23.3 pc/mi/ln

Level of service for ramp-freeway junction areas of influence C

Speed Estimation

Intermediate speed variable,	D_S = 0.419	
Space mean speed in ramp influence area,	S_R = 58.3	mph
Space mean speed in outer lanes,	S_O = N/A	mph
Space mean speed for all vehicles,	S = 58.3	mph

HCS2000: Ramps and Ramp Junctions Release 4.1d

Traffic Department
Sain Associates, Inc.

Diverge Analysis

Analyst:	MJL
Agency/Co.:	Sain Associates
Date performed:	1/12/05
Analysis time period:	AM DHV
Freeway/Dir of Travel:	NB I-65
Junction:	@ SR 248
Jurisdiction:	TDOT
Analysis Year:	2028 - Existing Layout
Description:	I-65 at SR 248

Freeway Data

Type of analysis	Diverge	
Number of lanes in freeway	2	
Free-flow speed on freeway	70.0	mph
Volume on freeway	6531	vph

Off Ramp Data

Side of freeway	Right	
Number of lanes in ramp	1	
Free-Flow speed on ramp	40.0	mph
Volume on ramp	916	vph
Length of first accel/decel lane	580	ft
Length of second accel/decel lane		ft

Adjacent Ramp Data (if one exists)

Does adjacent ramp exist?	Yes	
Volume on adjacent ramp	1669	vph
Position of adjacent ramp	Downstream	
Type of adjacent ramp	On	
Distance to adjacent ramp	1830	ft

Conversion to pc/h Under Base Conditions

Junction Components	Freeway		Ramp		Adjacent Ramp		
Volume, V (vph)	6531		916		1669		vph
Peak-hour factor, PHF	0.95		0.95		0.95		
Peak 15-min volume, v15	1719		241		439		v
Trucks and buses	25		25		4		%
Recreational vehicles	0		0		0		%
Terrain type:	Level		Level		Level		
Grade	0.00	%	0.00	%	0.00	%	
Length	0.00	mi	0.00	mi	0.00	mi	
Trucks and buses PCE, ET	1.5		1.5		1.5		
Recreational vehicle PCE, ER	1.2		1.2		1.2		
Heavy vehicle adjustment, fHV	0.889		0.889		0.980		
Driver population factor, fP	1.00		1.00		1.00		
Flow rate, vp	7734		1085		1792		pcph

Estimation of V12 Diverge Areas

L_{EQ} = (Equation 25-8 or 25-9)

P_{FD} = 1.000 Using Equation 0

$v_{12} = v_R + (v_F - v_R) P_{FD}$ = 7734 pc/h

Capacity Checks

	Actual	Maximum	LOS F?
$v_{Fi} = v_F$	7734	4800	Yes
v_{12}	7734	4400	Yes
$v_{FO} = v_F - v_R$	6649	4800	Yes
v_R	1085	2100	No

Level of Service Determination (if not F)

Density, $D_R = 4.252 + 0.0086\, v_{12} - 0.009\, L_D$ = 65.5 pc/mi/ln

Level of service for ramp-freeway junction areas of influence F

Speed Estimation

Intermediate speed variable, D_S = 0.461

Space mean speed in ramp influence area, S_R = 57.1 mph

Space mean speed in outer lanes, S_O = N/A mph

Space mean speed for all vehicles, S = 57.1 mph

HCS2000: Ramps and Ramp Junctions Release 4.1d

Traffic Department
Sain Associates, Inc.

Diverge Analysis

Analyst:	MJL
Agency/Co.:	Sain Associates
Date performed:	1/12/05
Analysis time period:	PM DHV
Freeway/Dir of Travel:	NB I-65
Junction:	@ SR 248
Jurisdiction:	TDOT
Analysis Year:	2028 - Existing Layout
Description:	I-65 at SR 248

Freeway Data

Type of analysis	Diverge	
Number of lanes in freeway	2	
Free-flow speed on freeway	70.0	mph
Volume on freeway	3486	vph

Off Ramp Data

Side of freeway	Right	
Number of lanes in ramp	1	
Free-Flow speed on ramp	40.0	mph
Volume on ramp	939	vph
Length of first accel/decel lane	580	ft
Length of second accel/decel lane		ft

Adjacent Ramp Data (if one exists)

Does adjacent ramp exist?	Yes	
Volume on adjacent ramp	2075	vph
Position of adjacent ramp	Downstream	
Type of adjacent ramp	On	
Distance to adjacent ramp	1830	ft

Conversion to pc/h Under Base Conditions

Junction Components	Freeway		Ramp		Adjacent Ramp		
Volume, V (vph)	3486		939		2075		vph
Peak-hour factor, PHF	0.95		0.95		0.95		
Peak 15-min volume, v15	917		247		546		v
Trucks and buses	25		25		6		%
Recreational vehicles	0		0		0		%
Terrain type:	Level		Level		Level		
Grade	0.00	%	0.00	%	0.00	%	
Length	0.00	mi	0.00	mi	0.00	mi	
Trucks and buses PCE, ET	1.5		1.5		1.5		
Recreational vehicle PCE, ER	1.2		1.2		1.2		
Heavy vehicle adjustment, fHV	0.889		0.889		0.971		
Driver population factor, fP	1.00		1.00		1.00		
Flow rate, vp	4128		1112		2250		pcph

Estimation of V12 Diverge Areas

L_{EQ} = (Equation 25-8 or 25-9)

P_{FD} = 1.000 Using Equation 0

$v_{12} = v_R + (v_F - v_R) P_{FD}$ = 4128 pc/h

Capacity Checks

	Actual	Maximum	LOS F?
$v_{Fi} = v_F$	4128	4800	No
v_{12}	4128	4400	No
$v_{FO} = v_F - v_R$	3016	4800	No
v_R	1112	2100	No

Level of Service Determination (if not F)

Density, $D_R = 4.252 + 0.0086\, v_{12} - 0.009\, L_D$ = 34.5 pc/mi/ln

Level of service for ramp-freeway junction areas of influence D

Speed Estimation

Intermediate speed variable, D_S = 0.463

Space mean speed in ramp influence area, S_R = 57.0 mph

Space mean speed in outer lanes, S_O = N/A mph

Space mean speed for all vehicles, S = 57.0 mph

HCS2000: Ramps and Ramp Junctions Release 4.1b

Traffic Department
Sain Associates, Inc.

Merge Analysis

Analyst:	MJL
Agency/Co.:	Sain Associates
Date performed:	8/5/2003
Analysis time period:	AM DHV
Freeway/dir or travel:	NB I-65
Junction:	@ SR 248
Jurisdiction:	TDOT
Analysis Year:	2008 - Existing Layout
Description:	I-65 at SR 248

Freeway Data

Type of analysis	Merge	
Number of lanes in freeway	2	
Free-flow speed on freeway	70.0	mph
Volume on freeway	3996	vph

On Ramp Data

Side of freeway	Right	
Number of lanes in ramp	1	
Free-flow speed on ramp	40.0	mph
Volume on ramp	1064	vph
Length of first accel/decel lane	400	ft
Length of second accel/decel lane		ft

Adjacent Ramp Data (if one exists)

Does adjacent ramp exist?	Yes	
Volume on adjacent Ramp	504	vph
Position of adjacent Ramp	Upstream	
Type of adjacent Ramp	Off	
Distance to adjacent Ramp	1830	ft

Conversion to pc/h Under Base Conditions

Junction Components	Freeway	Ramp	Adjacent Ramp	
Volume, V (vph)	3996	1064	504	vph
Peak-hour factor, PHF	0.95	0.95	0.95	
Peak 15-min volume, v15	1052	280	133	v
Trucks and buses	25	4	25	%
Recreational vehicles	0	0	0	%
Terrain type:	Rolling	Rolling	Rolling	
Grade	%	%	%	
Length	mi	mi	mi	
Trucks and buses PCE, ET	2.5	2.5	2.5	
Recreational vehicle PCE, ER	2.0	2.0	2.0	
Heavy vehicle adjustment, fHV	0.727	0.943	0.727	
Driver population factor, fP	1.00	1.00	1.00	
Flow rate, vp	5784	1187	729	pcph

Estimation of V12 Merge Areas

L_{EQ} = 0.00 (Equation 25-2 or 25-3)

P_{FM} = 1.000 Using Equation 0

$v_{12} = v_F (P_{FM})$ = 5784 pc/h

Capacity Checks

	Actual	Maximum	LOS F?
v_{FO}	6971	4800	Yes
v_{R12}	6971	4600	Yes

Level of Service Determination (if not F)

Density, $D_R = 5.475 + 0.00734\, v_R + 0.0078\, v_{12} - 0.00627\, L_A$ = 56.8 pc/mi/ln

Level of service for ramp-freeway junction areas of influence F

Speed Estimation

Intermediate speed variable, M_S = 4.444

Space mean speed in ramp influence area, S_R = mph

Space mean speed in outer lanes, S_O = N/A mph

Space mean speed for all vehicles, S = mph

HCS2000: Ramps and Ramp Junctions Release 4.1b

Traffic Department
Sain Associates, Inc.

Merge Analysis

Analyst:	MJL
Agency/Co.:	Sain Associates
Date performed:	8/5/2003
Analysis time period:	PM DHV
Freeway/dir or travel:	NB I-65
Junction:	@ SR 248
Jurisdiction:	TDOT
Analysis Year:	2008 - Existing Layout
Description:	I-65 at SR 248

Freeway Data

Type of analysis	Merge	
Number of lanes in freeway	2	
Free-flow speed on freeway	70.0	mph
Volume on freeway	1858	vph

On Ramp Data

Side of freeway	Right	
Number of lanes in ramp	1	
Free-flow speed on ramp	40.0	mph
Volume on ramp	1156	vph
Length of first accel/decel lane	400	ft
Length of second accel/decel lane		ft

Adjacent Ramp Data (if one exists)

Does adjacent ramp exist?	Yes	
Volume on adjacent Ramp	528	vph
Position of adjacent Ramp	Upstream	
Type of adjacent Ramp	Off	
Distance to adjacent Ramp	1830	ft

Conversion to pc/h Under Base Conditions

Junction Components	Freeway	Ramp	Adjacent Ramp	
Volume, V (vph)	1858	1156	528	vph
Peak-hour factor, PHF	0.95	0.95	0.95	
Peak 15-min volume, v15	489	304	139	v
Trucks and buses	25	6	25	%
Recreational vehicles	0	0	0	%
Terrain type:	Rolling	Rolling	Rolling	
Grade	%	%	%	
Length	mi	mi	mi	
Trucks and buses PCE, ET	2.5	2.5	2.5	
Recreational vehicle PCE, ER	2.0	2.0	2.0	
Heavy vehicle adjustment, fHV	0.727	0.917	0.727	
Driver population factor, fP	1.00	1.00	1.00	
Flow rate, vp	2689	1326	764	pcph

Estimation of V12 Merge Areas

L_{EQ} = 0.00 (Equation 25-2 or 25-3)

P_{FM} = 1.000 Using Equation 0

$v_{12} = v_F (P_{FM})$ = 2689 pc/h

Capacity Checks

	Actual	Maximum	LOS F?
v_{FO}	4015	4800	No
v_{R12}	4015	4600	No

Level of Service Determination (if not F)

Density, $D_R = 5.475 + 0.00734\, v_R + 0.0078\, v_{12} - 0.00627\, L_A$ = 33.7 pc/mi/ln

Level of service for ramp-freeway junction areas of influence D

Speed Estimation

Intermediate speed variable,	M_S = 0.505
Space mean speed in ramp influence area,	S_R = 55.9 mph
Space mean speed in outer lanes,	S_O = N/A mph
Space mean speed for all vehicles,	S = 55.9 mph

HCS2000: Ramps and Ramp Junctions Release 4.1b

Traffic Department
Sain Associates, Inc.

Merge Analysis

Analyst:	MJL
Agency/Co.:	Sain Associates
Date performed:	8/5/2003
Analysis time period:	AM DHV
Freeway/dir or travel:	NB I-65
Junction:	@ SR 248
Jurisdiction:	TDOT
Analysis Year:	2028 - Existing Layout
Description:	I-65 at SR 248

Freeway Data

Type of analysis	Merge	
Number of lanes in freeway	2	
Free-flow speed on freeway	70.0	mph
Volume on freeway	5615	vph

On Ramp Data

Side of freeway	Right	
Number of lanes in ramp	1	
Free-flow speed on ramp	40.0	mph
Volume on ramp	1669	vph
Length of first accel/decel lane	400	ft
Length of second accel/decel lane		ft

Adjacent Ramp Data (if one exists)

Does adjacent ramp exist?	Yes	
Volume on adjacent Ramp	916	vph
Position of adjacent Ramp	Upstream	
Type of adjacent Ramp	Off	
Distance to adjacent Ramp	1830	ft

Conversion to pc/h Under Base Conditions

Junction Components	Freeway	Ramp	Adjacent Ramp	
Volume, V (vph)	5615	1669	916	vph
Peak-hour factor, PHF	0.95	0.95	0.95	
Peak 15-min volume, v15	1478	439	241	v
Trucks and buses	25	4	25	%
Recreational vehicles	0	0	0	%
Terrain type:	Rolling	Rolling	Rolling	
Grade	%	%	%	
Length	mi	mi	mi	
Trucks and buses PCE, ET	2.5	2.5	2.5	
Recreational vehicle PCE, ER	2.0	2.0	2.0	
Heavy vehicle adjustment, fHV	0.727	0.943	0.727	
Driver population factor, fP	1.00	1.00	1.00	
Flow rate, vp	8127	1862	1326	pcph

Estimation of V12 Merge Areas

L_{EQ} = 0.00 (Equation 25-2 or 25-3)

P_{FM} = 1.000 Using Equation 0

$v_{12} = v_F (P_{FM})$ = 8127 pc/h

Capacity Checks

	Actual	Maximum	LOS F?
v_{FO}	9989	4800	Yes
v_{R12}	9989	4600	Yes

Level of Service Determination (if not F)

Density, $D_R = 5.475 + 0.00734\, v_R + 0.0078\, v_{12} - 0.00627\, L_A$ = 80.0 pc/mi/ln

Level of service for ramp-freeway junction areas of influence F

Speed Estimation

Intermediate speed variable, M_S = 85.252

Space mean speed in ramp influence area, S_R = mph

Space mean speed in outer lanes, S_O = N/A mph

Space mean speed for all vehicles, S = mph

HCS2000: Ramps and Ramp Junctions Release 4.1b

Traffic Department
Sain Associates, Inc.

Merge Analysis

Analyst:	MJL
Agency/Co.:	Sain Associates
Date performed:	8/5/2003
Analysis time period:	PM DHV
Freeway/dir or travel:	NB I-65
Junction:	@ SR 248
Jurisdiction:	TDOT
Analysis Year:	2028 - Existing Layout
Description:	I-65 at SR 248

Freeway Data

Type of analysis	Merge	
Number of lanes in freeway	2	
Free-flow speed on freeway	70.0	mph
Volume on freeway	2547	vph

On Ramp Data

Side of freeway	Right	
Number of lanes in ramp	1	
Free-flow speed on ramp	40.0	mph
Volume on ramp	2075	vph
Length of first accel/decel lane	400	ft
Length of second accel/decel lane		ft

Adjacent Ramp Data (if one exists)

Does adjacent ramp exist?	Yes	
Volume on adjacent Ramp	939	vph
Position of adjacent Ramp	Upstream	
Type of adjacent Ramp	Off	
Distance to adjacent Ramp	1830	ft

Conversion to pc/h Under Base Conditions

Junction Components	Freeway	Ramp	Adjacent Ramp	
Volume, V (vph)	2547	2075	939	vph
Peak-hour factor, PHF	0.95	0.95	0.95	
Peak 15-min volume, v15	670	546	247	v
Trucks and buses	25	6	25	%
Recreational vehicles	0	0	0	%
Terrain type:	Rolling	Rolling	Rolling	
Grade	%	%	%	
Length	mi	mi	mi	
Trucks and buses PCE, ET	2.5	2.5	2.5	
Recreational vehicle PCE, ER	2.0	2.0	2.0	
Heavy vehicle adjustment, fHV	0.727	0.917	0.727	
Driver population factor, fP	1.00	1.00	1.00	
Flow rate, vp	3686	2381	1359	pcph

Estimation of V12 Merge Areas

L_{EQ} = 0.00 (Equation 25-2 or 25-3)

P_{FM} = 1.000 Using Equation 0

$v_{12} = v_F (P_{FM})$ = 3686 pc/h

Capacity Checks

	Actual	Maximum	LOS F?
v_{FO}	6067	4800	Yes
v_{R12}	6067	4600	Yes

Level of Service Determination (if not F)

Density, $D_R = 5.475 + 0.00734\, v_R + 0.0078\, v_{12} - 0.00627\, L_A$ = 49.2 pc/mi/ln

Level of service for ramp-freeway junction areas of influence F

Speed Estimation

Intermediate speed variable,	M_S = 1.971	
Space mean speed in ramp influence area,	S_R = 14.8	mph
Space mean speed in outer lanes,	S_O = N/A	mph
Space mean speed for all vehicles,	S = 14.8	mph

HCS2000: Ramps and Ramp Junctions Release 4.1d

Traffic Department
Sain Associates, Inc.

Diverge Analysis

Analyst:	MJL
Agency/Co.:	Sain Associates
Date performed:	1/12/05
Analysis time period:	AM DHV
Freeway/Dir of Travel:	SB I-65
Junction:	@ SR 248
Jurisdiction:	TDOT
Analysis Year:	2008 - Existing Layout
Description:	I-65 at SR 248

Freeway Data

Type of analysis	Diverge	
Number of lanes in freeway	2	
Free-flow speed on freeway	70.0	mph
Volume on freeway	2243	vph

Off Ramp Data

Side of freeway	Right	
Number of lanes in ramp	1	
Free-Flow speed on ramp	40.0	mph
Volume on ramp	721	vph
Length of first accel/decel lane	300	ft
Length of second accel/decel lane		ft

Adjacent Ramp Data (if one exists)

Does adjacent ramp exist?	Yes	
Volume on adjacent ramp	231	vph
Position of adjacent ramp	Downstream	
Type of adjacent ramp	On	
Distance to adjacent ramp	1860	ft

Conversion to pc/h Under Base Conditions

Junction Components	Freeway		Ramp		Adjacent Ramp		
Volume, V (vph)	2243		721		231		vph
Peak-hour factor, PHF	0.95		0.95		0.95		
Peak 15-min volume, v15	590		190		61		v
Trucks and buses	25		10		21		%
Recreational vehicles	0		0		0		%
Terrain type:	Level		Level		Level		
Grade	0.00	%	0.00	%	0.00	%	
Length	0.00	mi	0.00	mi	0.00	mi	
Trucks and buses PCE, ET	1.5		1.5		1.5		
Recreational vehicle PCE, ER	1.2		1.2		1.2		
Heavy vehicle adjustment, fHV	0.889		0.952		0.905		
Driver population factor, fP	1.00		1.00		1.00		
Flow rate, vp	2656		797		269		pcph

Estimation of V12 Diverge Areas

L_{EQ} = (Equation 25-8 or 25-9)

P_{FD} = 1.000 Using Equation 0

$v_{12} = v_R + (v_F - v_R) P_{FD}$ = 2656 pc/h

Capacity Checks

	Actual	Maximum	LOS F?
$v_{Fi} = v_F$	2656	4800	No
v_{12}	2656	4400	No
$v_{FO} = v_F - v_R$	1859	4800	No
v_R	797	2100	No

Level of Service Determination (if not F)

Density, $D_R = 4.252 + 0.0086\, v_{12} - 0.009\, L_D$ = 24.4 pc/mi/ln

Level of service for ramp-freeway junction areas of influence C

Speed Estimation

Intermediate speed variable,	D_S = 0.435	
Space mean speed in ramp influence area,	S_R = 57.8	mph
Space mean speed in outer lanes,	S_O = N/A	mph
Space mean speed for all vehicles,	S = 57.8	mph

HCS2000: Ramps and Ramp Junctions Release 4.1d

Traffic Department
Sain Associates, Inc.

Diverge Analysis

Analyst:	MJL
Agency/Co.:	Sain Associates
Date performed:	1/12/05
Analysis time period:	PM DHV
Freeway/Dir of Travel:	SB I-65
Junction:	@ SR 248
Jurisdiction:	TDOT
Analysis Year:	2008 - Existing Layout
Description:	I-65 at SR 248

Freeway Data

Type of analysis	Diverge	
Number of lanes in freeway	2	
Free-flow speed on freeway	70.0	mph
Volume on freeway	4918	vph

Off Ramp Data

Side of freeway	Right	
Number of lanes in ramp	1	
Free-Flow speed on ramp	40.0	mph
Volume on ramp	1132	vph
Length of first accel/decel lane	300	ft
Length of second accel/decel lane		ft

Adjacent Ramp Data (if one exists)

Does adjacent ramp exist?	Yes	
Volume on adjacent ramp	709	vph
Position of adjacent ramp	Downstream	
Type of adjacent ramp	On	
Distance to adjacent ramp	1860	ft

Conversion to pc/h Under Base Conditions

Junction Components	Freeway		Ramp		Adjacent Ramp		
Volume, V (vph)	4918		1132		709		vph
Peak-hour factor, PHF	0.95		0.95		0.95		
Peak 15-min volume, v15	1294		298		187		v
Trucks and buses	25		4		12		%
Recreational vehicles	0		0		0		%
Terrain type:	Level		Level		Level		
Grade	0.00	%	0.00	%	0.00	%	
Length	0.00	mi	0.00	mi	0.00	mi	
Trucks and buses PCE, ET	1.5		1.5		1.5		
Recreational vehicle PCE, ER	1.2		1.2		1.2		
Heavy vehicle adjustment, fHV	0.889		0.980		0.943		
Driver population factor, fP	1.00		1.00		1.00		
Flow rate, vp	5824		1215		791		pcph

Estimation of V12 Diverge Areas

L_{EQ} = (Equation 25-8 or 25-9)

P_{FD} = 1.000 Using Equation 0

$v_{12} = v_R + (v_F - v_R) P_{FD}$ = 5824 pc/h

Capacity Checks

	Actual	Maximum	LOS F?
$v_{Fi} = v_F$	5824	4800	Yes
v_{12}	5824	4400	Yes
$v_{FO} = v_F - v_R$	4609	4800	No
v_R	1215	2100	No

Level of Service Determination (if not F)

Density, $D_R = 4.252 + 0.0086\, v_{12} - 0.009\, L_D$ = 51.6 pc/mi/ln

Level of service for ramp-freeway junction areas of influence F

Speed Estimation

Intermediate speed variable,	D_S = 0.472	
Space mean speed in ramp influence area,	S_R = 56.8	mph
Space mean speed in outer lanes,	S_O = N/A	mph
Space mean speed for all vehicles,	S = 56.8	mph

HCS2000: Ramps and Ramp Junctions Release 4.1d

Traffic Department
Sain Associates, Inc.

Diverge Analysis

Analyst:	MJL
Agency/Co.:	Sain Associates
Date performed:	1/12/05
Analysis time period:	AM DHV
Freeway/Dir of Travel:	SB I-65
Junction:	@ SR 248
Jurisdiction:	TDOT
Analysis Year:	2028 - Existing Layout
Description:	I-65 at SR 248

Freeway Data

Type of analysis	Diverge	
Number of lanes in freeway	2	
Free-flow speed on freeway	70.0	mph
Volume on freeway	3273	vph

Off Ramp Data

Side of freeway	Right	
Number of lanes in ramp	1	
Free-Flow speed on ramp	40.0	mph
Volume on ramp	1306	vph
Length of first accel/decel lane	300	ft
Length of second accel/decel lane		ft

Adjacent Ramp Data (if one exists)

Does adjacent ramp exist?	Yes	
Volume on adjacent ramp	397	vph
Position of adjacent ramp	Downstream	
Type of adjacent ramp	On	
Distance to adjacent ramp	1860	ft

Conversion to pc/h Under Base Conditions

Junction Components	Freeway		Ramp		Adjacent Ramp		
Volume, V (vph)	3273		1306		397		vph
Peak-hour factor, PHF	0.95		0.95		0.95		
Peak 15-min volume, v15	861		344		104		v
Trucks and buses	25		10		21		%
Recreational vehicles	0		0		0		%
Terrain type:	Level		Level		Level		
Grade	0.00	%	0.00	%	0.00	%	
Length	0.00	mi	0.00	mi	0.00	mi	
Trucks and buses PCE, ET	1.5		1.5		1.5		
Recreational vehicle PCE, ER	1.2		1.2		1.2		
Heavy vehicle adjustment, fHV	0.889		0.952		0.905		
Driver population factor, fP	1.00		1.00		1.00		
Flow rate, vp	3876		1443		462		pcph

Estimation of V12 Diverge Areas

L_{EQ} = (Equation 25-8 or 25-9)

P_{FD} = 1.000 Using Equation 0

$v_{12} = v_R + (v_F - v_R) P_{FD}$ = 3876 pc/h

Capacity Checks

	Actual	Maximum	LOS F?
$v_{Fi} = v_F$	3876	4800	No
v_{12}	3876	4400	No
$v_{FO} = v_F - v_R$	2433	4800	No
v_R	1443	2100	No

Level of Service Determination (if not F)

Density, $D_R = 4.252 + 0.0086\, v_{12} - 0.009\, L_D$ = 34.9 pc/mi/ln

Level of service for ramp-freeway junction areas of influence D

Speed Estimation

Intermediate speed variable, D_S = 0.493

Space mean speed in ramp influence area, S_R = 56.2 mph

Space mean speed in outer lanes, S_O = N/A mph

Space mean speed for all vehicles, S = 56.2 mph

HCS2000: Ramps and Ramp Junctions Release 4.1d

Traffic Department
Sain Associates, Inc.

Diverge Analysis

Analyst:	MJL
Agency/Co.:	Sain Associates
Date performed:	1/12/05
Analysis time period:	PM DHV
Freeway/Dir of Travel:	SB I-65
Junction:	@ SR 248
Jurisdiction:	TDOT
Analysis Year:	2028 - Existing Layout
Description: I-65 at SR 248	

Freeway Data

Type of analysis	Diverge	
Number of lanes in freeway	2	
Free-flow speed on freeway	70.0	mph
Volume on freeway	7125	vph

Off Ramp Data

Side of freeway	Right	
Number of lanes in ramp	1	
Free-Flow speed on ramp	40.0	mph
Volume on ramp	1903	vph
Length of first accel/decel lane	300	ft
Length of second accel/decel lane		ft

Adjacent Ramp Data (if one exists)

Does adjacent ramp exist?	Yes	
Volume on adjacent ramp	1310	vph
Position of adjacent ramp	Downstream	
Type of adjacent ramp	On	
Distance to adjacent ramp	1860	ft

Conversion to pc/h Under Base Conditions

Junction Components	Freeway		Ramp		Adjacent Ramp		
Volume, V (vph)	7125		1903		1310		vph
Peak-hour factor, PHF	0.95		0.95		0.95		
Peak 15-min volume, v15	1875		501		345		v
Trucks and buses	25		4		12		%
Recreational vehicles	0		0		0		%
Terrain type:	Level		Level		Level		
Grade	0.00	%	0.00	%	0.00	%	
Length	0.00	mi	0.00	mi	0.00	mi	
Trucks and buses PCE, ET	1.5		1.5		1.5		
Recreational vehicle PCE, ER	1.2		1.2		1.2		
Heavy vehicle adjustment, fHV	0.889		0.980		0.943		
Driver population factor, fP	1.00		1.00		1.00		
Flow rate, vp	8438		2043		1462		pcph

Estimation of V12 Diverge Areas

L_{EQ} = (Equation 25-8 or 25-9)

P_{FD} = 1.000 Using Equation 0

$v_{12} = v_R + (v_F - v_R) P_{FD}$ = 8438 pc/h

Capacity Checks

	Actual	Maximum	LOS F?
$v_{Fi} = v_F$	8438	4800	Yes
v_{12}	8438	4400	Yes
$v_{FO} = v_F - v_R$	6395	4800	Yes
v_R	2043	2100	No

Level of Service Determination (if not F)

Density, $D_R = 4.252 + 0.0086\, v_{12} - 0.009\, L_D$ = 74.1 pc/mi/ln

Level of service for ramp-freeway junction areas of influence F

Speed Estimation

Intermediate speed variable, D_S = 0.547

Space mean speed in ramp influence area, S_R = 54.7 mph

Space mean speed in outer lanes, S_O = N/A mph

Space mean speed for all vehicles, S = 54.7 mph

HCS2000: Ramps and Ramp Junctions Release 4.1b

Traffic Department
Sain Associates, Inc.

Merge Analysis

Analyst:	MJL
Agency/Co.:	Sain Associates
Date performed:	8/5/2003
Analysis time period:	AM DHV
Freeway/dir or travel:	SB I-65
Junction:	@ SR 248
Jurisdiction:	TDOT
Analysis Year:	2008 - Existing Layout
Description: I-65 at SR 248	

Freeway Data

Type of analysis	Merge	
Number of lanes in freeway	2	
Free-flow speed on freeway	70.0	mph
Volume on freeway	1522	vph

On Ramp Data

Side of freeway	Right	
Number of lanes in ramp	1	
Free-flow speed on ramp	40.0	mph
Volume on ramp	231	vph
Length of first accel/decel lane	520	ft
Length of second accel/decel lane		ft

Adjacent Ramp Data (if one exists)

Does adjacent ramp exist?	Yes	
Volume on adjacent Ramp	721	vph
Position of adjacent Ramp	Upstream	
Type of adjacent Ramp	Off	
Distance to adjacent Ramp	1860	ft

Conversion to pc/h Under Base Conditions

Junction Components	Freeway	Ramp	Adjacent Ramp	
Volume, V (vph)	1522	231	721	vph
Peak-hour factor, PHF	0.95	0.95	0.95	
Peak 15-min volume, v15	401	61	190	v
Trucks and buses	25	21	10	%
Recreational vehicles	0	0	0	%
Terrain type:	Rolling	Rolling	Rolling	
Grade	%	%	%	
Length	mi	mi	mi	
Trucks and buses PCE, ET	2.5	2.5	2.5	
Recreational vehicle PCE, ER	2.0	2.0	2.0	
Heavy vehicle adjustment, fHV	0.727	0.760	0.870	
Driver population factor, fP	1.00	1.00	1.00	
Flow rate, vp	2203	320	873	pcph

Estimation of V12 Merge Areas

L_{EQ} = 0.00 (Equation 25-2 or 25-3)

P_{FM} = 1.000 Using Equation 0

$v_{12} = v_F (P_{FM})$ = 2203 pc/h

Capacity Checks

	Actual	Maximum	LOS F?
v_{FO}	2523	4800	No
v_{R12}	2523	4600	No

Level of Service Determination (if not F)

Density, $D_R = 5.475 + 0.00734\, v_R + 0.0078\, v_{12} - 0.00627\, L_A$ = 21.7 pc/mi/ln

Level of service for ramp-freeway junction areas of influence C

Speed Estimation

Intermediate speed variable,	M_S = 0.328	
Space mean speed in ramp influence area,	S_R = 60.8	mph
Space mean speed in outer lanes,	S_O = N/A	mph
Space mean speed for all vehicles,	S = 60.8	mph

HCS2000: Ramps and Ramp Junctions Release 4.1b

Traffic Department
Sain Associates, Inc.

Merge Analysis

Analyst:	MJL
Agency/Co.:	Sain Associates
Date performed:	8/5/2003
Analysis time period:	PM DHV
Freeway/dir or travel:	SB I-65
Junction:	@ SR 248
Jurisdiction:	TDOT
Analysis Year:	2008 - Existing Layout
Description: I-65 at SR 248	

Freeway Data

Type of analysis	Merge	
Number of lanes in freeway	2	
Free-flow speed on freeway	70.0	mph
Volume on freeway	3786	vph

On Ramp Data

Side of freeway	Right	
Number of lanes in ramp	1	
Free-flow speed on ramp	40.0	mph
Volume on ramp	709	vph
Length of first accel/decel lane	520	ft
Length of second accel/decel lane		ft

Adjacent Ramp Data (if one exists)

Does adjacent ramp exist?	Yes	
Volume on adjacent Ramp	1132	vph
Position of adjacent Ramp	Upstream	
Type of adjacent Ramp	Off	
Distance to adjacent Ramp	1860	ft

Conversion to pc/h Under Base Conditions

Junction Components	Freeway	Ramp	Adjacent Ramp	
Volume, V (vph)	3786	709	1132	vph
Peak-hour factor, PHF	0.95	0.95	0.95	
Peak 15-min volume, v15	996	187	298	v
Trucks and buses	25	12	4	%
Recreational vehicles	0	0	0	%
Terrain type:	Rolling	Rolling	Rolling	
Grade	%	%	%	
Length	mi	mi	mi	
Trucks and buses PCE, ET	2.5	2.5	2.5	
Recreational vehicle PCE, ER	2.0	2.0	2.0	
Heavy vehicle adjustment, fHV	0.727	0.847	0.943	
Driver population factor, fP	1.00	1.00	1.00	
Flow rate, vp	5480	881	1263	pcph

Estimation of V12 Merge Areas

L_{EQ} = 0.00 (Equation 25-2 or 25-3)

P_{FM} = 1.000 Using Equation 0

$v_{12} = v_F (P_{FM})$ = 5480 pc/h

Capacity Checks

	Actual	Maximum	LOS F?
v_{FO}	6361	4800	Yes
v_{R12}	6361	4600	Yes

Level of Service Determination (if not F)

Density, $D_R = 5.475 + 0.00734\, v_R + 0.0078\, v_{12} - 0.00627\, L_A$ = 51.4 pc/mi/ln

Level of service for ramp-freeway junction areas of influence F

Speed Estimation

Intermediate speed variable, M_S = 2.537

Space mean speed in ramp influence area, S_R = mph

Space mean speed in outer lanes, S_O = N/A mph

Space mean speed for all vehicles, S = mph

HCS2000: Ramps and Ramp Junctions Release 4.1b

Traffic Department
Sain Associates, Inc.

Merge Analysis

Analyst:	MJL
Agency/Co.:	Sain Associates
Date performed:	8/5/2003
Analysis time period:	AM DHV
Freeway/dir or travel:	SB I-65
Junction:	@ SR 248
Jurisdiction:	TDOT
Analysis Year:	2028 - Existing Layout
Description: I-65 at SR 248	

Freeway Data

Type of analysis	Merge	
Number of lanes in freeway	2	
Free-flow speed on freeway	70.0	mph
Volume on freeway	1967	vph

On Ramp Data

Side of freeway	Right	
Number of lanes in ramp	1	
Free-flow speed on ramp	40.0	mph
Volume on ramp	397	vph
Length of first accel/decel lane	520	ft
Length of second accel/decel lane		ft

Adjacent Ramp Data (if one exists)

Does adjacent ramp exist?	Yes	
Volume on adjacent Ramp	1306	vph
Position of adjacent Ramp	Upstream	
Type of adjacent Ramp	Off	
Distance to adjacent Ramp	1860	ft

Conversion to pc/h Under Base Conditions

Junction Components	Freeway	Ramp	Adjacent Ramp	
Volume, V (vph)	1967	397	1306	vph
Peak-hour factor, PHF	0.95	0.95	0.95	
Peak 15-min volume, v15	518	104	344	v
Trucks and buses	25	21	10	%
Recreational vehicles	0	0	0	%
Terrain type:	Rolling	Rolling	Rolling	
Grade	%	%	%	
Length	mi	mi	mi	
Trucks and buses PCE, ET	2.5	2.5	2.5	
Recreational vehicle PCE, ER	2.0	2.0	2.0	
Heavy vehicle adjustment, fHV	0.727	0.760	0.870	
Driver population factor, fP	1.00	1.00	1.00	
Flow rate, vp	2847	550	1581	pcph

Estimation of V12 Merge Areas

L_{EQ} = 0.00 (Equation 25-2 or 25-3)

P_{FM} = 1.000 Using Equation 0

$v_{12} = v_F (P_{FM})$ = 2847 pc/h

Capacity Checks

	Actual	Maximum	LOS F?
v_{FO}	3397	4800	No
v_{R12}	3397	4600	No

Level of Service Determination (if not F)

Density, $D_R = 5.475 + 0.00734\, v_R + 0.0078\, v_{12} - 0.00627\, L_A$ = 28.5 pc/mi/ln

Level of service for ramp-freeway junction areas of influence D

Speed Estimation

Intermediate speed variable,	M_S = 0.396	
Space mean speed in ramp influence area,	S_R = 58.9	mph
Space mean speed in outer lanes,	S_O = N/A	mph
Space mean speed for all vehicles,	S = 58.9	mph

HCS2000: Ramps and Ramp Junctions Release 4.1b

Traffic Department
Sain Associates, Inc.

Merge Analysis

Analyst:	MJL
Agency/Co.:	Sain Associates
Date performed:	8/5/2003
Analysis time period:	PM DHV
Freeway/dir or travel:	SB I-65
Junction:	@ SR 248
Jurisdiction:	TDOT
Analysis Year:	2028 - Existing Layout
Description:	I-65 at SR 248

Freeway Data

Type of analysis	Merge	
Number of lanes in freeway	2	
Free-flow speed on freeway	70.0	mph
Volume on freeway	5222	vph

On Ramp Data

Side of freeway	Right	
Number of lanes in ramp	1	
Free-flow speed on ramp	40.0	mph
Volume on ramp	1310	vph
Length of first accel/decel lane	520	ft
Length of second accel/decel lane		ft

Adjacent Ramp Data (if one exists)

Does adjacent ramp exist?	Yes	
Volume on adjacent Ramp	1903	vph
Position of adjacent Ramp	Upstream	
Type of adjacent Ramp	Off	
Distance to adjacent Ramp	1860	ft

Conversion to pc/h Under Base Conditions

Junction Components	Freeway	Ramp	Adjacent Ramp	
Volume, V (vph)	5222	1310	1903	vph
Peak-hour factor, PHF	0.95	0.95	0.95	
Peak 15-min volume, v15	1374	345	501	v
Trucks and buses	25	12	4	%
Recreational vehicles	0	0	0	%
Terrain type:	Rolling	Rolling	Rolling	
Grade	%	%	%	
Length	mi	mi	mi	
Trucks and buses PCE, ET	2.5	2.5	2.5	
Recreational vehicle PCE, ER	2.0	2.0	2.0	
Heavy vehicle adjustment, fHV	0.727	0.847	0.943	
Driver population factor, fP	1.00	1.00	1.00	
Flow rate, vp	7558	1627	2123	pcph

Estimation of V12 Merge Areas

L_{EQ} = 0.00 (Equation 25-2 or 25-3)

P_{FM} = 1.000 Using Equation 0

$v_{12} = v_F (P_{FM})$ = 7558 pc/h

Capacity Checks

	Actual	Maximum	LOS F?
v_{FO}	9185	4800	Yes
v_{R12}	9185	4600	Yes

Level of Service Determination (if not F)

Density, $D_R = 5.475 + 0.00734\, v_R + 0.0078\, v_{12} - 0.00627\, L_A$ = 73.1 pc/mi/ln

Level of service for ramp-freeway junction areas of influence F

Speed Estimation

Intermediate speed variable, M_S = 38.304

Space mean speed in ramp influence area, S_R = mph

Space mean speed in outer lanes, S_O = N/A mph

Space mean speed for all vehicles, S = mph

HCS2000: Ramps and Ramp Junctions Release 4.1d

Traffic Department
Sain Associates, Inc.

Diverge Analysis

Analyst:	MJL
Agency/Co.:	Sain Associates
Date performed:	7/12/05
Analysis time period:	FUTURE AM DHV
Freeway/Dir of Travel:	I-65 northbound
Junction:	@ SR 248
Jurisdiction:	TDOT
Analysis Year:	2028 - Future Improvements
Description: I-65 @ SR 248	

Freeway Data

Type of analysis	Diverge	
Number of lanes in freeway	4	
Free-flow speed on freeway	70.0	mph
Volume on freeway	6531	vph

Off Ramp Data

Side of freeway	Right	
Number of lanes in ramp	2	
Free-Flow speed on ramp	35.0	mph
Volume on ramp	916	vph
Length of first accel/decel lane	520	ft
Length of second accel/decel lane	1800	ft

Adjacent Ramp Data (if one exists)

Does adjacent ramp exist?	Yes	
Volume on adjacent ramp	1669	vph
Position of adjacent ramp	Downstream	
Type of adjacent ramp	On	
Distance to adjacent ramp	3600	ft

Conversion to pc/h Under Base Conditions

Junction Components	Freeway		Ramp		Adjacent Ramp		
Volume, V (vph)	6531		916		1669		vph
Peak-hour factor, PHF	0.95		0.95		0.95		
Peak 15-min volume, v15	1719		241		439		v
Trucks and buses	25		3		3		%
Recreational vehicles	0		0		0		%
Terrain type:	Rolling		Rolling		Rolling		
Grade	0.00	%	0.00	%	0.00	%	
Length	0.00	mi	0.00	mi	0.00	mi	
Trucks and buses PCE, ET	2.5		2.5		2.5		
Recreational vehicle PCE, ER	2.0		2.0		2.0		
Heavy vehicle adjustment, fHV	0.727		0.957		0.957		
Driver population factor, fP	1.00		1.00		1.00		
Flow rate, vp	9453		1008		1836		pcph

Estimation of V12 Diverge Areas

L_{EQ} = (Equation 25-8 or 25-9)

P_{FD} = 0.260 Using Equation 0

$v_{12} = v_R + (v_F - v_R) P_{FD}$ = 3204 pc/h

Capacity Checks

	Actual	Maximum	LOS F?
$v_{Fi} = v_F$	9453	9600	No
v_{12}	3204	4400	No
$v_{FO} = v_F - v_R$	8445	9600	No
v_R	1008	3800	No

Level of Service Determination (if not F)

Density, $D_R = 4.252 + 0.0086\, v_{12} - 0.009\, L_D$ = 6.2 pc/mi/ln

Level of service for ramp-freeway junction areas of influence A

Speed Estimation

Intermediate speed variable, D_S = 0.519

Space mean speed in ramp influence area, S_R = 55.5 mph

Space mean speed in outer lanes, S_O = 68.5 mph

Space mean speed for all vehicles, S = 63.5 mph

HCS2000: Ramps and Ramp Junctions Release 4.1d

Traffic Department
Sain Associates, Inc.

Diverge Analysis

Analyst:	MJL
Agency/Co.:	Sain Associates
Date performed:	7/12/05
Analysis time period:	FUTURE PM DHV
Freeway/Dir of Travel:	I-65 northbound
Junction:	@ SR 248
Jurisdiction:	TDOT
Analysis Year:	2028 - Future Improvements
Description: I-65 @ SR 248	

Freeway Data

Type of analysis	Diverge	
Number of lanes in freeway	4	
Free-flow speed on freeway	70.0	mph
Volume on freeway	3486	vph

Off Ramp Data

Side of freeway	Right	
Number of lanes in ramp	2	
Free-Flow speed on ramp	35.0	mph
Volume on ramp	939	vph
Length of first accel/decel lane	520	ft
Length of second accel/decel lane	1800	ft

Adjacent Ramp Data (if one exists)

Does adjacent ramp exist?	Yes	
Volume on adjacent ramp	2075	vph
Position of adjacent ramp	Downstream	
Type of adjacent ramp	On	
Distance to adjacent ramp	3600	ft

Conversion to pc/h Under Base Conditions

Junction Components	Freeway		Ramp		Adjacent Ramp		
Volume, V (vph)	3486		939		2075		vph
Peak-hour factor, PHF	0.95		0.95		0.95		
Peak 15-min volume, v15	917		247		546		v
Trucks and buses	25		3		3		%
Recreational vehicles	0		0		0		%
Terrain type:	Rolling		Rolling		Rolling		
Grade	0.00	%	0.00	%	0.00	%	
Length	0.00	mi	0.00	mi	0.00	mi	
Trucks and buses PCE, ET	2.5		2.5		2.5		
Recreational vehicle PCE, ER	2.0		2.0		2.0		
Heavy vehicle adjustment, fHV	0.727		0.957		0.957		
Driver population factor, fP	1.00		1.00		1.00		
Flow rate, vp	5046		1033		2283		pcph

Estimation of V12 Diverge Areas

L_{EQ} = (Equation 25-8 or 25-9)

P_{FD} = 0.260 Using Equation 0

$v_{12} = v_R + (v_F - v_R) P_{FD}$ = 2076 pc/h

Capacity Checks

	Actual	Maximum	LOS F?
$v_{Fi} = v_F$	5046	9600	No
v_{12}	2076	4400	No
$v_{FO} = v_F - v_R$	4013	9600	No
v_R	1033	3800	No

Level of Service Determination (if not F)

Density, $D_R = 4.252 + 0.0086\, v_{12} - 0.009\, L_D$ = -3.5 pc/mi/ln

Level of service for ramp-freeway junction areas of influence A

Speed Estimation

Intermediate speed variable, D_S = 0.521

Space mean speed in ramp influence area, S_R = 55.4 mph

Space mean speed in outer lanes, S_O = 74.9 mph

Space mean speed for all vehicles, S = 65.4 mph

HCS2000: Ramps and Ramp Junctions Release 4.1d

Traffic Department
Sain Associates, Inc.

Merge Analysis

Analyst:	MJL
Agency/Co.:	Sain Associates
Date performed:	7/12/05
Analysis time period:	FUTURE AM DHV
Freeway/Dir of Travel:	I-65 northbound
Junction:	@ SR 248
Jurisdiction:	TDOT
Analysis Year:	2028 - Future Improvements
Description: I-65 @ SR 248	

Freeway Data

Type of analysis	Merge	
Number of lanes in freeway	4	
Free-flow speed on freeway	70.0	mph
Volume on freeway	5615	vph

On Ramp Data

Side of freeway	Right	
Number of lanes in ramp	2	
Free-flow speed on ramp	40.0	mph
Volume on ramp	1669	vph
Length of first accel/decel lane	880	ft
Length of second accel/decel lane	1620	ft

Adjacent Ramp Data (if one exists)

Does adjacent ramp exist?	Yes	
Volume on adjacent Ramp	916	vph
Position of adjacent Ramp	Upstream	
Type of adjacent Ramp	Off	
Distance to adjacent Ramp	3600	ft

Conversion to pc/h Under Base Conditions

Junction Components	Freeway	Ramp	Adjacent Ramp	
Volume, V (vph)	5615	1669	916	vph
Peak-hour factor, PHF	0.95	0.95	0.95	
Peak 15-min volume, v15	1478	439	241	v
Trucks and buses	25	3	3	%
Recreational vehicles	0	0	0	%
Terrain type:	Rolling	Rolling	Rolling	
Grade	%	%	%	
Length	mi	mi	mi	
Trucks and buses PCE, ET	2.5	2.5	2.5	
Recreational vehicle PCE, ER	2.0	2.0	2.0	
Heavy vehicle adjustment, fHV	0.727	0.957	0.957	
Driver population factor, fP	1.00	1.00	1.00	
Flow rate, vp	8127	1836	1008	pcph

Estimation of V12 Merge Areas

L_{EQ} = (Equation 25-2 or 25-3)

P_{FM} = 0.209 Using Equation 0

$v_{12} = v_F (P_{FM})$ = 1699 pc/h

Capacity Checks

	Actual	Maximum	LOS F?
v_{FO}	9963	9600	Yes
v_{R12}	3535	4600	No

Level of Service Determination (if not F)

Density, $D_R = 5.475 + 0.00734\, v_R + 0.0078\, v_{12} - 0.00627\, L_A$ = 11.0 pc/mi/ln

Level of service for ramp-freeway junction areas of influence F

Speed Estimation

Intermediate speed variable,	M_S = 0.184	
Space mean speed in ramp influence area,	S_R = 64.8	mph
Space mean speed in outer lanes,	S_O = 58.0	mph
Space mean speed for all vehicles,	S = 60.2	mph

HCS2000: Ramps and Ramp Junctions Release 4.1d

Traffic Department
Sain Associates, Inc.

Merge Analysis

Analyst:	MJL
Agency/Co.:	Sain Associates
Date performed:	7/12/05
Analysis time period:	FUTURE AM DHV
Freeway/Dir of Travel:	I-65 northbound
Junction:	@ SR 248
Jurisdiction:	TDOT
Analysis Year:	2028 - Future Improvements
Description: I-65 @ SR 248	

Freeway Data

Type of analysis	Merge	
Number of lanes in freeway	4	
Free-flow speed on freeway	70.0	mph
Volume on freeway	2547	vph

On Ramp Data

Side of freeway	Right	
Number of lanes in ramp	2	
Free-flow speed on ramp	40.0	mph
Volume on ramp	2075	vph
Length of first accel/decel lane	880	ft
Length of second accel/decel lane	1620	ft

Adjacent Ramp Data (if one exists)

Does adjacent ramp exist?	Yes	
Volume on adjacent Ramp	939	vph
Position of adjacent Ramp	Upstream	
Type of adjacent Ramp	Off	
Distance to adjacent Ramp	3600	ft

Conversion to pc/h Under Base Conditions

Junction Components	Freeway	Ramp	Adjacent Ramp	
Volume, V (vph)	2547	2075	939	vph
Peak-hour factor, PHF	0.95	0.95	0.95	
Peak 15-min volume, v15	670	546	247	v
Trucks and buses	25	3	3	%
Recreational vehicles	0	0	0	%
Terrain type:	Rolling	Rolling	Rolling	
Grade	%	%	%	
Length	mi	mi	mi	
Trucks and buses PCE, ET	2.5	2.5	2.5	
Recreational vehicle PCE, ER	2.0	2.0	2.0	
Heavy vehicle adjustment, fHV	0.727	0.957	0.957	
Driver population factor, fP	1.00	1.00	1.00	
Flow rate, vp	3686	2283	1033	pcph

Estimation of V12 Merge Areas

L_{EQ} = (Equation 25-2 or 25-3)

P_{FM} = 0.209 Using Equation 0

$v_{12} = v_F (P_{FM})$ = 770 pc/h

Capacity Checks

	Actual	Maximum	LOS F?
v_{FO}	5969	9600	No
v_{R12}	3053	4600	No

Level of Service Determination (if not F)

Density, $D_R = 5.475 + 0.00734\, v_R + 0.0078\, v_{12} - 0.00627\, L_A$ = 7.0 pc/mi/ln

Level of service for ramp-freeway junction areas of influence A

Speed Estimation

Intermediate speed variable,	M_S = 0.133	
Space mean speed in ramp influence area,	S_R = 66.3	mph
Space mean speed in outer lanes,	S_O = 66.6	mph
Space mean speed for all vehicles,	S = 66.4	mph

HCS2000: Ramps and Ramp Junctions Release 4.1d

Traffic Department
Sain Associates, Inc.

Diverge Analysis

Analyst:	MJL
Agency/Co.:	Sain Associates
Date performed:	7/12/05
Analysis time period:	FUTURE AM DHV
Freeway/Dir of Travel:	I-65 southbound
Junction:	@ SR 248
Jurisdiction:	TDOT
Analysis Year:	2028 - Future Improvements
Description: I-65 @ SR 248	

Freeway Data

Type of analysis	Diverge	
Number of lanes in freeway	4	
Free-flow speed on freeway	70.0	mph
Volume on freeway	3273	vph

Off Ramp Data

Side of freeway	Right	
Number of lanes in ramp	2	
Free-Flow speed on ramp	35.0	mph
Volume on ramp	1306	vph
Length of first accel/decel lane	520	ft
Length of second accel/decel lane	1800	ft

Adjacent Ramp Data (if one exists)

Does adjacent ramp exist?	Yes	
Volume on adjacent ramp	397	vph
Position of adjacent ramp	Downstream	
Type of adjacent ramp	On	
Distance to adjacent ramp	2400	ft

Conversion to pc/h Under Base Conditions

Junction Components	Freeway		Ramp		Adjacent Ramp		
Volume, V (vph)	3273		1306		397		vph
Peak-hour factor, PHF	0.95		0.95		0.95		
Peak 15-min volume, v15	861		344		104		v
Trucks and buses	25		3		3		%
Recreational vehicles	0		0		0		%
Terrain type:	Rolling		Rolling		Rolling		
Grade	0.00	%	0.00	%	0.00	%	
Length	0.00	mi	0.00	mi	0.00	mi	
Trucks and buses PCE, ET	2.5		2.5		2.5		
Recreational vehicle PCE, ER	2.0		2.0		2.0		
Heavy vehicle adjustment, fHV	0.727		0.957		0.957		
Driver population factor, fP	1.00		1.00		1.00		
Flow rate, vp	4737		1437		437		pcph

Estimation of V12 Diverge Areas

L_{EQ} = (Equation 25-8 or 25-9)

P_{FD} = 0.260 Using Equation 0

$v_{12} = v_R + (v_F - v_R) P_{FD}$ = 2295 pc/h

Capacity Checks

	Actual	Maximum	LOS F?
$v_{Fi} = v_F$	4737	9600	No
v_{12}	2295	4400	No
$v_{FO} = v_F - v_R$	3300	9600	No
v_R	1437	3800	No

Level of Service Determination (if not F)

Density, $D_R = 4.252 + 0.0086\, v_{12} - 0.009\, L_D$ = -1.6 pc/mi/ln

Level of service for ramp-freeway junction areas of influence A

Speed Estimation

Intermediate speed variable, D_S = 0.557

Space mean speed in ramp influence area, S_R = 54.4 mph

Space mean speed in outer lanes, S_O = 75.9 mph

Space mean speed for all vehicles, S = 63.7 mph

HCS2000: Ramps and Ramp Junctions Release 4.1d

Traffic Department
Sain Associates, Inc.

Diverge Analysis

Analyst:	MJL
Agency/Co.:	Sain Associates
Date performed:	7/12/05
Analysis time period:	FUTURE PM DHV
Freeway/Dir of Travel:	I-65 southbound
Junction:	@ SR 248
Jurisdiction:	TDOT
Analysis Year:	2028 - Future Improvements
Description: I-65 @ SR 248	

Freeway Data

Type of analysis	Diverge	
Number of lanes in freeway	4	
Free-flow speed on freeway	70.0	mph
Volume on freeway	7125	vph

Off Ramp Data

Side of freeway	Right	
Number of lanes in ramp	2	
Free-Flow speed on ramp	35.0	mph
Volume on ramp	1903	vph
Length of first accel/decel lane	520	ft
Length of second accel/decel lane	1800	ft

Adjacent Ramp Data (if one exists)

Does adjacent ramp exist?	Yes	
Volume on adjacent ramp	1310	vph
Position of adjacent ramp	Downstream	
Type of adjacent ramp	On	
Distance to adjacent ramp	2400	ft

Conversion to pc/h Under Base Conditions

Junction Components	Freeway		Ramp		Adjacent Ramp		
Volume, V (vph)	7125		1903		1310		vph
Peak-hour factor, PHF	0.95		0.95		0.95		
Peak 15-min volume, v15	1875		501		345		v
Trucks and buses	25		3		3		%
Recreational vehicles	0		0		0		%
Terrain type:	Rolling		Rolling		Rolling		
Grade	0.00	%	0.00	%	0.00	%	
Length	0.00	mi	0.00	mi	0.00	mi	
Trucks and buses PCE, ET	2.5		2.5		2.5		
Recreational vehicle PCE, ER	2.0		2.0		2.0		
Heavy vehicle adjustment, fHV	0.727		0.957		0.957		
Driver population factor, fP	1.00		1.00		1.00		
Flow rate, vp	10312		2093		1441		pcph

Estimation of V12 Diverge Areas

L_{EQ} = (Equation 25-8 or 25-9)

P_{FD} = 0.260 Using Equation 0

$v_{12} = v_R + (v_F - v_R) P_{FD}$ = 4230 pc/h

Capacity Checks

	Actual	Maximum	LOS F?
$v_{Fi} = v_F$	10312	9600	Yes
v_{12}	4230	4400	No
$v_{FO} = v_F - v_R$	8219	9600	No
v_R	2093	3800	No

Level of Service Determination (if not F)

Density, $D_R = 4.252 + 0.0086\, v_{12} - 0.009\, L_D$ = 15.1 pc/mi/ln

Level of service for ramp-freeway junction areas of influence F

Speed Estimation

Intermediate speed variable, D_S = 0.616

Space mean speed in ramp influence area, S_R = 52.7 mph

Space mean speed in outer lanes, S_O = 68.8 mph

Space mean speed for all vehicles, S = 61.2 mph

HCS2000: Ramps and Ramp Junctions Release 4.1d

Traffic Department
Sain Associates, Inc.

Merge Analysis

Analyst:	MJL
Agency/Co.:	Sain Associates
Date performed:	7/12/05
Analysis time period:	FUTURE AM DHV
Freeway/Dir of Travel:	I-65 southbound
Junction:	@ SR 248
Jurisdiction:	TDOT
Analysis Year:	2028 - Future Improvements
Description: I-65 @ SR 248	

Freeway Data

Type of analysis	Merge	
Number of lanes in freeway	4	
Free-flow speed on freeway	70.0	mph
Volume on freeway	1967	vph

On Ramp Data

Side of freeway	Right	
Number of lanes in ramp	2	
Free-flow speed on ramp	35.0	mph
Volume on ramp	397	vph
Length of first accel/decel lane	1010	ft
Length of second accel/decel lane	1200	ft

Adjacent Ramp Data (if one exists)

Does adjacent ramp exist?	Yes	
Volume on adjacent Ramp	1306	vph
Position of adjacent Ramp	Upstream	
Type of adjacent Ramp	Off	
Distance to adjacent Ramp	2400	ft

Conversion to pc/h Under Base Conditions

Junction Components	Freeway	Ramp	Adjacent Ramp	
Volume, V (vph)	1967	397	1306	vph
Peak-hour factor, PHF	0.95	0.95	0.95	
Peak 15-min volume, v15	518	104	344	v
Trucks and buses	25	3	3	%
Recreational vehicles	0	0	0	%
Terrain type:	Rolling	Rolling	Rolling	
Grade	%	%	%	
Length	mi	mi	mi	
Trucks and buses PCE, ET	2.5	2.5	2.5	
Recreational vehicle PCE, ER	2.0	2.0	2.0	
Heavy vehicle adjustment, fHV	0.727	0.957	0.957	
Driver population factor, fP	1.00	1.00	1.00	
Flow rate, vp	2847	437	1437	pcph

Estimation of V12 Merge Areas

L_{EQ} = (Equation 25-2 or 25-3)

P_{FM} = 0.209 Using Equation 0

$v_{12} = v_F (P_{FM})$ = 595 pc/h

Capacity Checks

	Actual	Maximum	LOS F?
v_{FO}	3284	9600	No
v_{R12}	1032	4600	No

Level of Service Determination (if not F)

Density, $D_R = 5.475 + 0.00734\, v_R + 0.0078\, v_{12} - 0.00627\, L_A$ = -6.9 pc/mi/ln

Level of service for ramp-freeway junction areas of influence A

Speed Estimation

Intermediate speed variable,	M_S = 0.107	
Space mean speed in ramp influence area,	S_R = 67.0	mph
Space mean speed in outer lanes,	S_O = 67.7	mph
Space mean speed for all vehicles,	S = 67.5	mph

HCS2000: Ramps and Ramp Junctions Release 4.1d

Traffic Department
Sain Associates, Inc.

Merge Analysis

Analyst:	MJL
Agency/Co.:	Sain Associates
Date performed:	7/12/05
Analysis time period:	FUTURE PM DHV
Freeway/Dir of Travel:	I-65 southbound
Junction:	@ SR 248
Jurisdiction:	TDOT
Analysis Year:	2028 - Future Improvements
Description: I-65 @ SR 248	

Freeway Data

Type of analysis	Merge	
Number of lanes in freeway	4	
Free-flow speed on freeway	70.0	mph
Volume on freeway	5222	vph

On Ramp Data

Side of freeway	Right	
Number of lanes in ramp	2	
Free-flow speed on ramp	35.0	mph
Volume on ramp	1310	vph
Length of first accel/decel lane	1010	ft
Length of second accel/decel lane	1200	ft

Adjacent Ramp Data (if one exists)

Does adjacent ramp exist?	Yes	
Volume on adjacent Ramp	1903	vph
Position of adjacent Ramp	Upstream	
Type of adjacent Ramp	Off	
Distance to adjacent Ramp	2400	ft

Conversion to pc/h Under Base Conditions

Junction Components	Freeway	Ramp	Adjacent Ramp	
Volume, V (vph)	5222	1310	1903	vph
Peak-hour factor, PHF	0.95	0.95	0.95	
Peak 15-min volume, v15	1374	345	501	v
Trucks and buses	25	3	3	%
Recreational vehicles	0	0	0	%
Terrain type:	Rolling	Rolling	Rolling	
Grade	%	%	%	
Length	mi	mi	mi	
Trucks and buses PCE, ET	2.5	2.5	2.5	
Recreational vehicle PCE, ER	2.0	2.0	2.0	
Heavy vehicle adjustment, fHV	0.727	0.957	0.957	
Driver population factor, fP	1.00	1.00	1.00	
Flow rate, vp	7558	1441	2093	pcph

Estimation of V12 Merge Areas

L_{EQ} = (Equation 25-2 or 25-3)

P_{FM} = 0.209 Using Equation 0

$v_{12} = v_F (P_{FM})$ = 1580 pc/h

Capacity Checks

	Actual	Maximum	LOS F?
v_{FO}	8999	9600	No
v_{R12}	3021	4600	No

Level of Service Determination (if not F)

Density, $D_R = 5.475 + 0.00734\, v_R + 0.0078\, v_{12} - 0.00627\, L_A$ = 8.2 pc/mi/ln

Level of service for ramp-freeway junction areas of influence A

Speed Estimation

Intermediate speed variable, M_S = 0.176

Space mean speed in ramp influence area, S_R = 65.1 mph

Space mean speed in outer lanes, S_O = 59.3 mph

Space mean speed for all vehicles, S = 61.1 mph

SR 248

INTERSECTIONS

AT

I-65 RAMP TERMINALS

AM/PM DHV

2008 & 2028

HCS2000: Unsignalized Intersections Release 4.1b

TWO-WAY STOP CONTROL SUMMARY

Analyst: MJL
Agency/Co.: Sain Associates
Date Performed: 8/6/2003
Analysis Time Period: AM DHV
Intersection: SR 248 at I-65 NB Ramps
Jurisdiction: TDOT
Units: U. S. Customary
Analysis Year: 2008
Project ID: I-65 at SR 248
East/West Street: SR 248
North/South Street: I-65 NB Ramps
Intersection Orientation: EW Study period (hrs): 0.25

Vehicle Volumes and Adjustments

Major Street: Approach	Eastbound			Westbound		
Movement	1	2	3	4	5	6
	L	T	R	L	T	R
Volume	864	575			277	200
Peak-Hour Factor, PHF	0.93	0.93			0.87	0.87
Hourly Flow Rate, HFR	929	618			318	229
Percent Heavy Vehicles	12	--	--		--	--
Median Type	Undivided					
RT Channelized?						
Lanes	0	1			1	0
Configuration	LT					TR
Upstream Signal?		Yes			No	

Minor Street: Approach	Northbound			Southbound		
Movement	7	8	9	10	11	12
	L	T	R	L	T	R
Volume	286	0	218			
Peak Hour Factor, PHF	0.92	0.92	0.92			
Hourly Flow Rate, HFR	310	0	236			
Percent Heavy Vehicles	27	27	27			
Percent Grade (%)		0			0	
Median Storage						
Flared Approach: Exists?		No				
Storage						
RT Channelized?						
Lanes	0	1	0			
Configuration		LTR				

Delay, Queue Length, and Level of Service

Approach	EB	WB	Northbound			Southbound		
Movement	1	4	7	8	9	10	11	12
Lane Config	LT			LTR				
v (vph)	929			546				
C(m) (vph)	974			0				
v/c	0.95							
95% queue length	16.06							
Control Delay	39.5							
LOS	E			F				
Approach Delay								
Approach LOS								

HCS2000: Unsignalized Intersections Release 4.1b

TWO-WAY STOP CONTROL SUMMARY

Analyst: MJL
Agency/Co.: Sain Associates
Date Performed: 8/6/2003
Analysis Time Period: PM DHV
Intersection: SR 248 at I-65 NB Ramps
Jurisdiction: TDOT
Units: U. S. Customary
Analysis Year: 2008
Project ID: I-65 at SR 248
East/West Street: SR 248
North/South Street: I-65 NB Ramps
Intersection Orientation: EW Study period (hrs): 0.25

Vehicle Volumes and Adjustments

Major Street: Approach	Eastbound			Westbound		
Movement	1	2	3	4	5	6
	L	T	R	L	T	R
Volume	753	617			672	403
Peak-Hour Factor, PHF	0.93	0.93			0.93	0.93
Hourly Flow Rate, HFR	809	663			722	433
Percent Heavy Vehicles	12	--	--		--	--
Median Type	Undivided					
RT Channelized?						
Lanes	0	1			1	0
Configuration	LT					TR
Upstream Signal?		Yes			No	

Minor Street: Approach	Northbound			Southbound		
Movement	7	8	9	10	11	12
	L	T	R	L	T	R
Volume	316	0	212			
Peak Hour Factor, PHF	0.92	0.92	0.92			
Hourly Flow Rate, HFR	343	0	230			
Percent Heavy Vehicles	43	43	43			
Percent Grade (%)		0			0	
Median Storage						
Flared Approach: Exists?		No				
Storage						
RT Channelized?						
Lanes	0	1	0			
Configuration		LTR				

Delay, Queue Length, and Level of Service

Approach	EB	WB	Northbound			Southbound		
Movement	1	4	7	8	9	10	11	12
Lane Config	LT			LTR				
v (vph)	809			573				
C(m) (vph)	570			0				
v/c	1.42							
95% queue length	37.88							
Control Delay	219.4							
LOS	F			F				
Approach Delay								
Approach LOS								

HCS2000: Unsignalized Intersections Release 4.1b

TWO-WAY STOP CONTROL SUMMARY

Analyst: MJL
Agency/Co.: Sain Associates
Date Performed: 8/6/2003
Analysis Time Period: AM DHV
Intersection: SR 248 at I-65 NB Ramps
Jurisdiction: TDOT
Units: U. S. Customary
Analysis Year: 2028
Project ID: I-65 at SR 248
East/West Street: SR 248
North/South Street: I-65 NB Ramps
Intersection Orientation: EW Study period (hrs): 0.25

Vehicle Volumes and Adjustments

Major Street: Approach	Eastbound			Westbound		
Movement	1	2	3	4	5	6
	L	T	R	L	T	R
Volume	1347	1066			474	322
Peak-Hour Factor, PHF	0.95	0.95			0.92	0.92
Hourly Flow Rate, HFR	1417	1122			515	349
Percent Heavy Vehicles	12	--	--		--	--
Median Type	Undivided					
RT Channelized?						
Lanes	0	1			1	0
Configuration	LT					TR
Upstream Signal?		Yes			No	

Minor Street: Approach	Northbound			Southbound		
Movement	7	8	9	10	11	12
	L	T	R	L	T	R
Volume	519	0	397			
Peak Hour Factor, PHF	0.92	0.92	0.92			
Hourly Flow Rate, HFR	564	0	431			
Percent Heavy Vehicles	27	27	27			
Percent Grade (%)		0			0	
Median Storage						
Flared Approach: Exists?		No				
Storage						
RT Channelized?						
Lanes	0	1	0			
Configuration		LTR				

Delay, Queue Length, and Level of Service

Approach	EB	WB	Northbound			Southbound		
Movement	1	4	7	8	9	10	11	12
Lane Config	LT			LTR				
v (vph)	1417			995				
C(m) (vph)	738							
v/c	1.92							
95% queue length	90.73							
Control Delay	433.8							
LOS	F							
Approach Delay								
Approach LOS								

HCS2000: Unsignalized Intersections Release 4.1b

TWO-WAY STOP CONTROL SUMMARY

Analyst: MJL
Agency/Co.: Sain Associates
Date Performed: 8/6/2003
Analysis Time Period: PM DHV
Intersection: SR 248 at I-65 NB Ramps
Jurisdiction: TDOT
Units: U. S. Customary
Analysis Year: 2028
Project ID: I-65 at SR 248
East/West Street: SR 248
North/South Street: I-65 NB Ramps
Intersection Orientation: EW Study period (hrs): 0.25

Vehicle Volumes and Adjustments

Major Street: Approach	Eastbound			Westbound		
Movement	1	2	3	4	5	6
	L	T	R	L	T	R
Volume	1322	1115			1281	753
Peak-Hour Factor, PHF	0.95	0.95			0.95	0.95
Hourly Flow Rate, HFR	1391	1173			1348	792
Percent Heavy Vehicles	12	--	--		--	--
Median Type	Undivided					
RT Channelized?						
Lanes	0	1			1	0
Configuration	LT					TR
Upstream Signal?		Yes			No	

Minor Street: Approach	Northbound			Southbound		
Movement	7	8	9	10	11	12
	L	T	R	L	T	R
Volume	564	0	375			
Peak Hour Factor, PHF	0.92	0.92	0.92			
Hourly Flow Rate, HFR	613	0	407			
Percent Heavy Vehicles	43	43	43			
Percent Grade (%)		0			0	
Median Storage						
Flared Approach: Exists?		No				
Storage						
RT Channelized?						
Lanes	0	1	0			
Configuration		LTR				

Delay, Queue Length, and Level of Service

Approach	EB	WB	Northbound			Southbound		
Movement	1	4	7	8	9	10	11	12
Lane Config	LT			LTR				
v (vph)	1391			1020				
C(m) (vph)	233			0				
v/c	5.97							
95% queue length	148.27							
Control Delay								
LOS	F			F				
Approach Delay								
Approach LOS								

SBRamps@SR248AMPeak(2008).txt
HCS2000: Signalized Intersections Release 4.1d

Analyst: MJL
Agency: Sain Associates
Date: 8/7/2003
Period: AM DHV
Project ID: I-65 at SR 248
E/W St: SR 248

Inter.: SR 248 at I-65 SB Ramps
Area Type: All other areas
Jurisd: TDOT
Year : 2008

N/S St: I-65 SB Ramps

SIGNALIZED INTERSECTION SUMMARY

	Eastbound			Westbound			Northbound			Southbound		
	L	T	R	L	T	R	L	T	R	L	T	R
No. Lanes	0	1	0	0	1	0	0	0	0	0	1	0
LGConfig		TR			LT						LTR	
Volume		1132	137	94	469					307	0	414
Lane Width		12.0			12.0						12.0	
RTOR Vol			35									112

Duration 0.25 Area Type: All other areas

Signal Operations

Phase Combination	1	2	3	4			5	6	7	8
EB Left					NB	Left				
Thru	A					Thru				
Right	A					Right				
Peds						Peds				
WB Left	A				SB	Left	A			
Thru	A					Thru	A			
Right						Right	A			
Peds						Peds				
NB Right					EB	Right				
SB Right					WB	Right				
Green	55.0						25.0			
Yellow	4.0						4.0			
All Red	1.0						1.0			

Cycle Length: 90.0 secs

Intersection Performance Summary

Appr/ Lane Grp	Lane Group Capacity	Adj Sat Flow Rate (s)	Ratios v/c	Ratios g/C	Lane Group Delay	Lane Group LOS	Approach Delay	Approach LOS
Eastbound								
TR	1148	1879	1.16	0.61	97.8	F	97.8	F
Westbound								
LT	566	926	1.08	0.61	79.2	E	79.2	E
Northbound								
Southbound								
LTR	480	1729	1.38	0.28	215.8	F	215.8	F

Intersection Delay = 123.5 (sec/veh) Intersection LOS = F

HCS2000: Signalized Intersections Release 4.1e

Analyst: MJL
Agency: Sain Associates
Date: 8/7/2003
Period: PM DHV
Project ID: I-65 at SR 248
E/W St: SR 248

Inter.: SR 248 at I-65 SB Ramps
Area Type: All other areas
Jurisd: TDOT
Year : 2008

N/S St: I-65 SB Ramps

SIGNALIZED INTERSECTION SUMMARY

	Eastbound			Westbound			Northbound			Southbound		
	L	T	R	L	T	R	L	T	R	L	T	R
No. Lanes	0	1	0	0	1	0	0	0	0	0	1	0
LGConfig		TR			LT						LTR	
Volume		1027	420	289	699					343	0	789
Lane Width		12.0			12.0						12.0	
RTOR Vol			35									112

Duration 0.25 Area Type: All other areas

Signal Operations

Phase Combination	1	2	3	4		5	6	7	8
EB Left					NB Left				
Thru	A				Thru				
Right	A				Right				
Peds					Peds				
WB Left	A				SB Left	A			
Thru	A				Thru	A			
Right					Right	A			
Peds					Peds				
NB Right					EB Right				
SB Right					WB Right				
Green	51.0					19.0			
Yellow	4.0					4.0			
All Red	1.0					1.0			

Cycle Length: 80.0 secs

Intersection Performance Summary

Appr/ Lane Grp	Lane Group Capacity	Adj Sat Flow Rate (s)	Ratios v/c	Ratios g/C	Lane Group Delay	Lane Group LOS	Approach Delay	Approach LOS
Eastbound								
TR	1167	1830	1.30	0.64	156.2	F	156.2	F
Westbound								
LT	300	470	3.58	0.64	1184	F	1184	F
Northbound								
Southbound								
LTR	404	1701	2.72	0.24	809.4	F	809.4	F

Intersection Delay = 649.6 (sec/veh) Intersection LOS = F

HCS2000: Signalized Intersections Release 4.1d

Analyst: MJL
Agency: Sain Associates
Date: 8/7/2003
Period: AM DHV
Project ID: I-65 at SR 248
E/W St: SR 248

Inter.: SR 248 at I-65 SB Ramps
Area Type: All other areas
Jurisd: TDOT
Year : 2028

N/S St: I-65 SB Ramps

SIGNALIZED INTERSECTION SUMMARY

	Eastbound			Westbound			Northbound			Southbound		
	L	T	R	L	T	R	L	T	R	L	T	R
No. Lanes	0	1	0	0	1	0	0	0	0	0	1	0
LGConfig		TR			LT						LTR	
Volume		1855	241	156	837					558	0	748
Lane Width		12.0			12.0						12.0	
RTOR Vol			35									112

Duration 0.25 Area Type: All other areas

Signal Operations

Phase Combination	1	2	3	4			5	6	7	8
EB Left					NB	Left				
Thru	A					Thru				
Right	A					Right				
Peds						Peds				
WB Left	A				SB	Left	A			
Thru	A					Thru	A			
Right						Right	A			
Peds						Peds				
NB Right					EB	Right				
SB Right					WB	Right				
Green	55.0						25.0			
Yellow	4.0						4.0			
All Red	1.0						1.0			

Cycle Length: 90.0 secs

Intersection Performance Summary

Appr/ Lane Grp	Lane Group Capacity	Adj Sat Flow Rate (s)	Ratios v/c	Ratios g/C	Lane Group Delay	Lane Group LOS	Approach Delay	Approach LOS
Eastbound								
TR	1145	1874	1.90	0.61	423.6	F	423.6	F
Westbound								
LT	208	340	5.19	0.61	1915	F	1915	F
Northbound								
Southbound								
LTR	479	1723	2.68	0.28	794.7	F	794.7	F

Intersection Delay = 883.9 (sec/veh) Intersection LOS = F

HCS2000: Signalized Intersections Release 4.1e

Analyst: MJL
Agency: Sain Associates
Date: 8/7/2003
Period: PM DHV
Project ID: I-65 at SR 248
E/W St: SR 248

Inter.: SR 248 at I-65 SB Ramps
Area Type: All other areas
Jurisd: TDOT
Year : 2028

N/S St: I-65 SB Ramps

SIGNALIZED INTERSECTION SUMMARY

	Eastbound			Westbound			Northbound			Southbound		
	L	T	R	L	T	R	L	T	R	L	T	R
No. Lanes	0	1	0	0	1	0	0	0	0	0	1	0
LGConfig		TR			LT						LTR	
Volume		1842	770	540	1305					595	0	1308
Lane Width		12.0			12.0						12.0	
RTOR Vol			35									112

Duration 0.25 Area Type: All other areas

Signal Operations

Phase Combination	1	2	3	4			5	6	7	8
EB Left					NB	Left				
Thru	A					Thru				
Right	A					Right				
Peds						Peds				
WB Left	A				SB	Left	A			
Thru	A					Thru	A			
Right						Right	A			
Peds						Peds				
NB Right					EB	Right				
SB Right					WB	Right				
Green	51.0						19.0			
Yellow	4.0						4.0			
All Red	1.0						1.0			

Cycle Length: 80.0 secs

Intersection Performance Summary

Appr/ Lane Grp	Lane Group Capacity	Adj Sat Flow Rate (s)	Ratios v/c	Ratios g/C	Lane Group Delay	Lane Group LOS	Approach Delay	Approach LOS
Eastbound								
TR	1165	1827	2.33	0.64	615.1	F	615.1	F
Westbound								
LT	67	105		0.64				
Northbound								
Southbound								
LTR	404	1700	4.77	0.24	1731	F	1731	F

Intersection Delay = (sec/veh) Intersection LOS =

Movement	EBL	EBT	EBR	WBL	WBT	WBR	NBL	NBT	NBR	SBL	SBT	SBR
Lane Configurations												
Ideal Flow (vphpl)	1900	1900	1900	1900	1900	1900	1900	1900	1900	1900	1900	1900
Total Lost time (s)	4.0	4.0			4.0	4.0	4.0		4.0			
Lane Util. Factor	0.97	0.91			0.81	1.00	0.97		1.00			
Frt	1.00	1.00			1.00	0.85	1.00		0.85			
Flt Protected	0.95	1.00			1.00	1.00	0.95		1.00			
Satd. Flow (prot)	3433	5085			7544	1583	3433		1583			
Flt Permitted	0.95	1.00			1.00	1.00	0.95		1.00			
Satd. Flow (perm)	3433	5085			7544	1583	3433		1583			
Volume (vph)	1347	1066	0	0	474	322	519	0	397	0	0	0
Peak-hour factor, PHF	0.93	0.93	0.93	0.92	0.92	0.92	0.87	0.87	0.87	0.90	0.90	0.90
Adj. Flow (vph)	1448	1146	0	0	515	350	597	0	456	0	0	0
RTOR Reduction (vph)	0	0	0	0	0	296	0	0	80	0	0	0
Lane Group Flow (vph)	1448	1146	0	0	515	54	597	0	376	0	0	0
Turn Type	Prot					Perm	Prot		custom			
Protected Phases	5	2			6		8					
Permitted Phases						6			8			
Actuated Green, G (s)	65.7	90.7			20.0	20.0	34.3		34.3			
Effective Green, g (s)	66.7	91.7			21.0	21.0	35.3		35.3			
Actuated g/C Ratio	0.49	0.68			0.16	0.16	0.26		0.26			
Clearance Time (s)	5.0	5.0			5.0	5.0	5.0		5.0			
Vehicle Extension (s)	3.0	5.0			5.0	5.0	3.0		3.0			
Lane Grp Cap (vph)	1696	3454			1174	246	898		414			
v/s Ratio Prot	c0.42	0.23			c0.07		0.17					
v/s Ratio Perm						0.03			c0.24			
v/c Ratio	0.85	0.33			0.44	0.22	0.66		0.91			
Uniform Delay, d1	29.9	9.0			51.7	49.8	44.6		48.3			
Progression Factor	0.19	0.41			0.92	1.87	1.00		1.00			
Incremental Delay, d2	4.0	0.2			1.1	2.0	1.9		23.0			
Delay (s)	9.7	3.9			48.6	95.3	46.4		71.3			
Level of Service	A	A			D	F	D		E			
Approach Delay (s)		7.1			67.5			57.2			0.0	
Approach LOS		A			E			E			A	

Intersection Summary			
HCM Average Control Delay	30.4	HCM Level of Service	C
HCM Volume to Capacity ratio	0.80		
Actuated Cycle Length (s)	135.0	Sum of lost time (s)	12.0
Intersection Capacity Utilization	83.2%	ICU Level of Service	E
Analysis Period (min)	15		
c Critical Lane Group			

Movement	EBL	EBT	EBR	WBL	WBT	WBR	NBL	NBT	NBR	SBL	SBT	SBR
Lane Configurations		↑↑↑↑↑	↱	↰↰	↑↑↑↑					↰↰		↱↱
Ideal Flow (vphpl)	1900	1900	1900	1900	1900	1900	1900	1900	1900	1900	1900	1900
Total Lost time (s)		4.0	4.0	4.0	4.0					4.0		4.0
Lane Util. Factor		0.81	1.00	0.97	0.91					0.97		0.88
Frt		1.00	0.85	1.00	1.00					1.00		0.85
Flt Protected		1.00	1.00	0.95	1.00					0.95		1.00
Satd. Flow (prot)		7544	1583	3433	5085					3433		2787
Flt Permitted		1.00	1.00	0.95	1.00					0.95		1.00
Satd. Flow (perm)		7544	1583	3433	5085					3433		2787
Volume (vph)	0	1855	241	156	837	0	0	0	0	558	0	748
Peak-hour factor, PHF	0.95	0.95	0.95	0.92	0.92	0.92	0.90	0.90	0.90	0.92	0.92	0.92
Adj. Flow (vph)	0	1953	254	170	910	0	0	0	0	607	0	813
RTOR Reduction (vph)	0	0	80	0	0	0	0	0	0	0	0	206
Lane Group Flow (vph)	0	1953	174	170	910	0	0	0	0	607	0	607
Turn Type			Perm	Prot						Prot		custom
Protected Phases		2		1	6					4		4
Permitted Phases			2									
Actuated Green, G (s)		73.1	73.1	12.0	90.1					34.9		34.9
Effective Green, g (s)		74.1	74.1	13.0	91.1					35.9		35.9
Actuated g/C Ratio		0.55	0.55	0.10	0.67					0.27		0.27
Clearance Time (s)		5.0	5.0	5.0	5.0					5.0		5.0
Vehicle Extension (s)		5.0	5.0	3.0	5.0					3.0		3.0
Lane Grp Cap (vph)		4141	869	331	3431					913		741
v/s Ratio Prot		c0.26		c0.05	0.18					0.18		c0.22
v/s Ratio Perm			0.11									
v/c Ratio		0.47	0.20	0.51	0.27					0.66		0.82
Uniform Delay, d1		18.5	15.4	58.0	8.7					44.2		46.5
Progression Factor		0.29	0.12	0.37	1.08					1.00		1.00
Incremental Delay, d2		0.1	0.1	1.2	0.2					1.8		7.0
Delay (s)		5.4	1.9	22.9	9.6					46.0		53.5
Level of Service		A	A	C	A					D		D
Approach Delay (s)		5.0			11.7			0.0			50.3	
Approach LOS		A			B			A			D	

Intersection Summary			
HCM Average Control Delay	20.2	HCM Level of Service	C
HCM Volume to Capacity ratio	0.58		
Actuated Cycle Length (s)	135.0	Sum of lost time (s)	12.0
Intersection Capacity Utilization	83.2%	ICU Level of Service	E
Analysis Period (min)	15		
c Critical Lane Group			

Movement	EBL	EBT	EBR	WBL	WBT	WBR	NBL	NBT	NBR	SBL	SBT	SBR
Lane Configurations												
Ideal Flow (vphpl)	1900	1900	1900	1900	1900	1900	1900	1900	1900	1900	1900	1900
Total Lost time (s)	4.0	4.0			4.0	4.0	4.0		4.0			
Lane Util. Factor	0.97	0.91			0.81	1.00	0.97		1.00			
Frt	1.00	1.00			1.00	0.85	1.00		0.85			
Flt Protected	0.95	1.00			1.00	1.00	0.95		1.00			
Satd. Flow (prot)	3433	5085			7544	1583	3433		1583			
Flt Permitted	0.95	1.00			1.00	1.00	0.95		1.00			
Satd. Flow (perm)	3433	5085			7544	1583	3433		1583			
Volume (vph)	1322	1115	0	0	1281	753	564	0	375	0	0	0
Peak-hour factor, PHF	0.93	0.93	0.93	0.92	0.92	0.92	0.87	0.87	0.87	0.90	0.90	0.90
Adj. Flow (vph)	1422	1199	0	0	1392	818	648	0	431	0	0	0
RTOR Reduction (vph)	0	0	0	0	0	240	0	0	107	0	0	0
Lane Group Flow (vph)	1422	1199	0	0	1392	578	648	0	324	0	0	0
Turn Type	Prot					Perm	Prot		custom			
Protected Phases	5	2			6		8					
Permitted Phases						6			8			
Actuated Green, G (s)	58.7	100.0			36.3	36.3	25.0		25.0			
Effective Green, g (s)	59.7	101.0			37.3	37.3	26.0		26.0			
Actuated g/C Ratio	0.44	0.75			0.28	0.28	0.19		0.19			
Clearance Time (s)	5.0	5.0			5.0	5.0	5.0		5.0			
Vehicle Extension (s)	3.0	5.0			5.0	5.0	3.0		3.0			
Lane Grp Cap (vph)	1518	3804			2084	437	661		305			
v/s Ratio Prot	c0.41	0.24			0.18		0.19					
v/s Ratio Perm						c0.37			c0.20			
v/c Ratio	0.94	0.32			0.67	1.32	0.98		1.06			
Uniform Delay, d1	35.9	5.6			43.4	48.8	54.2		54.5			
Progression Factor	0.28	0.11			0.73	0.71	1.00		1.00			
Incremental Delay, d2	9.8	0.2			0.9	154.1	30.0		69.4			
Delay (s)	19.8	0.8			32.6	188.7	84.2		123.9			
Level of Service	B	A			C	F	F		F			
Approach Delay (s)		11.1			90.4			100.1			0.0	
Approach LOS		B			F			F			A	

Intersection Summary			
HCM Average Control Delay	57.0	HCM Level of Service	E
HCM Volume to Capacity ratio	1.08		
Actuated Cycle Length (s)	135.0	Sum of lost time (s)	12.0
Intersection Capacity Utilization	110.4%	ICU Level of Service	H
Analysis Period (min)	15		
c Critical Lane Group			

Movement	EBL	EBT	EBR	WBL	WBT	WBR	NBL	NBT	NBR	SBL	SBT	SBR
Lane Configurations		↑↑↑↑↑	↱	↰↰	↑↑↑↑					↰↰		↱↱
Ideal Flow (vphpl)	1900	1900	1900	1900	1900	1900	1900	1900	1900	1900	1900	1900
Total Lost time (s)		4.0	4.0	4.0	4.0					4.0		4.0
Lane Util. Factor		0.81	1.00	0.97	0.91					0.97		0.88
Frt		1.00	0.85	1.00	1.00					1.00		0.85
Flt Protected		1.00	1.00	0.95	1.00					0.95		1.00
Satd. Flow (prot)		7544	1583	3433	5085					3433		2787
Flt Permitted		1.00	1.00	0.95	1.00					0.95		1.00
Satd. Flow (perm)		7544	1583	3433	5085					3433		2787
Volume (vph)	0	1842	770	540	1305	0	0	0	0	595	0	1308
Peak-hour factor, PHF	0.95	0.95	0.95	0.92	0.92	0.92	0.90	0.90	0.90	0.92	0.92	0.92
Adj. Flow (vph)	0	1939	811	587	1418	0	0	0	0	647	0	1422
RTOR Reduction (vph)	0	0	316	0	0	0	0	0	0	0	0	68
Lane Group Flow (vph)	0	1939	495	587	1418	0	0	0	0	647	0	1354
Turn Type			Perm	Prot						Prot		custom
Protected Phases		2		1	6					4		4
Permitted Phases			2									
Actuated Green, G (s)		60.0	60.0	20.0	85.0					40.0		40.0
Effective Green, g (s)		61.0	61.0	21.0	86.0					41.0		41.0
Actuated g/C Ratio		0.45	0.45	0.16	0.64					0.30		0.30
Clearance Time (s)		5.0	5.0	5.0	5.0					5.0		5.0
Vehicle Extension (s)		5.0	5.0	3.0	5.0					3.0		3.0
Lane Grp Cap (vph)		3409	715	534	3239					1043		846
v/s Ratio Prot		0.26		c0.17	0.28					0.19		c0.49
v/s Ratio Perm			c0.31									
v/c Ratio		0.57	0.69	1.10	0.44					0.62		1.60
Uniform Delay, d1		27.3	29.5	57.0	12.3					40.3		47.0
Progression Factor		0.90	0.76	0.42	1.20					1.00		1.00
Incremental Delay, d2		0.1	0.5	63.9	0.2					1.2		276.0
Delay (s)		24.7	23.0	87.6	15.0					41.5		323.0
Level of Service		C	C	F	B					D		F
Approach Delay (s)		24.2			36.3			0.0			235.0	
Approach LOS		C			D			A			F	

Intersection Summary			
HCM Average Control Delay	91.7	HCM Level of Service	F
HCM Volume to Capacity ratio	1.06		
Actuated Cycle Length (s)	135.0	Sum of lost time (s)	12.0
Intersection Capacity Utilization	110.4%	ICU Level of Service	H
Analysis Period (min)	15		
c Critical Lane Group			

Movement	EBL	EBT	EBR2	WBL	WBT	WBR2	NBL	NBR2	SBL	SBR2
Lane Configurations										
Ideal Flow (vphpl)	1900	1900	1900	1900	1900	1900	1900	1900	1900	1900
Total Lost time (s)	4.0	4.0	4.0	4.0	4.0		4.0	4.0	4.0	4.0
Lane Util. Factor	0.97	0.91	1.00	0.97	0.91		0.97	1.00	0.97	0.88
Frt	1.00	1.00	0.85	1.00	0.92		1.00	0.85	1.00	0.85
Flt Protected	0.95	1.00	1.00	0.95	1.00		0.95	1.00	0.95	1.00
Satd. Flow (prot)	3433	5085	1583	3433	4701		3433	1583	3433	2787
Flt Permitted	0.95	1.00	1.00	0.95	1.00		0.95	1.00	0.95	1.00
Satd. Flow (perm)	3433	5085	1583	3433	4701		3433	1583	3433	2787
Volume (vph)	1347	508	241	156	318	322	519	397	558	748
Peak-hour factor, PHF	0.90	0.90	0.90	0.90	0.90	0.90	0.90	0.90	0.90	0.90
Adj. Flow (vph)	1497	564	268	173	353	358	577	441	620	831
RTOR Reduction (vph)	0	0	110	0	134	0	0	337	0	47
Lane Group Flow (vph)	1497	564	158	173	577	0	577	104	620	784
Turn Type	Prot		Perm	Prot			Prot	custom	Prot	custom
Protected Phases	5	2		1	6		8		4	
Permitted Phases			2					8		5
Actuated Green, G (s)	66.2	78.5	78.5	11.5	23.8		22.0	22.0	22.0	66.2
Effective Green, g (s)	67.2	79.5	79.5	12.5	24.8		31.0	31.0	31.0	67.2
Actuated g/C Ratio	0.50	0.59	0.59	0.09	0.18		0.23	0.23	0.23	0.50
Clearance Time (s)	5.0	5.0	5.0	5.0	5.0		13.0	13.0	13.0	5.0
Vehicle Extension (s)	3.0	3.0	3.0	3.0	3.0		3.0	3.0	3.0	3.0
Lane Grp Cap (vph)	1709	2995	932	318	864		788	364	788	1387
v/s Ratio Prot	c0.44	0.11		0.05	c0.12		0.17		c0.18	
v/s Ratio Perm			0.10					0.07		0.28
v/c Ratio	0.88	0.19	0.17	0.54	0.67		0.73	0.29	0.79	0.57
Uniform Delay, d1	30.2	12.8	12.7	58.5	51.3		48.2	42.9	48.9	23.7
Progression Factor	0.34	0.41	1.31	1.18	0.77		1.00	1.00	1.00	1.00
Incremental Delay, d2	1.5	0.0	0.1	1.8	3.9		3.5	0.4	5.2	0.5
Delay (s)	11.6	5.2	16.7	70.6	43.5		51.7	43.3	54.1	24.2
Level of Service	B	A	B	E	D		D	D	D	C
Approach Delay (s)		10.7			48.8		48.1		37.0	
Approach LOS		B			D		D		D	

Intersection Summary			
HCM Average Control Delay	30.0	HCM Level of Service	C
HCM Volume to Capacity ratio	0.81		
Actuated Cycle Length (s)	135.0	Sum of lost time (s)	12.0
Intersection Capacity Utilization	Err%	ICU Level of Service	H
Analysis Period (min)	15		
c Critical Lane Group			

Movements	EBL	EBT	EBR2	WBL	WBT	WBR2	NBL	NBR2	SBL	SBR2
Lane Configurations										
Ideal Flow (vphpl)	1900	1900	1900	1900	1900	1900	1900	1900	1900	1900
Total Lost time (s)	4.0	4.0	4.0	4.0	4.0		4.0	4.0	4.0	4.0
Lane Util. Factor	0.97	0.91	1.00	0.97	0.91		0.97	1.00	0.97	0.88
Frt	1.00	1.00	0.85	1.00	0.92		1.00	0.85	1.00	0.85
Flt Protected	0.95	1.00	1.00	0.95	1.00		0.95	1.00	0.95	1.00
Satd. Flow (prot)	3433	5085	1583	3433	4701		3433	1583	3433	2787
Flt Permitted	0.95	1.00	1.00	0.95	1.00		0.95	1.00	0.95	1.00
Satd. Flow (perm)	3433	5085	1583	3433	4701		3433	1583	3433	2787
Volume (vph)	1322	521	770	540	741	753	564	375	595	1308
Peak-hour factor, PHF	0.90	0.90	0.90	0.90	0.90	0.90	0.90	0.90	0.90	0.90
Adj. Flow (vph)	1469	579	856	600	823	837	627	417	661	1453
RTOR Reduction (vph)	0	0	182	0	136	0	0	346	0	20
Lane Group Flow (vph)	1469	579	674	600	1524	0	627	71	661	1433
Turn Type	Prot		Perm	Prot			Prot	custom	Prot	custom
Protected Phases	5	2		1	6		8		4	
Permitted Phases			2					8		5
Actuated Green, G (s)	59.0	74.0	74.0	24.0	39.0		14.0	14.0	14.0	59.0
Effective Green, g (s)	60.0	75.0	75.0	25.0	40.0		23.0	23.0	23.0	60.0
Actuated g/C Ratio	0.44	0.56	0.56	0.19	0.30		0.17	0.17	0.17	0.44
Clearance Time (s)	5.0	5.0	5.0	5.0	5.0		13.0	13.0	13.0	5.0
Vehicle Extension (s)	3.0	3.0	3.0	3.0	3.0		3.0	3.0	3.0	3.0
Lane Grp Cap (vph)	1526	2825	879	636	1393		585	270	585	1239
v/s Ratio Prot	0.43	0.11		0.17	c0.32		0.18		c0.19	
v/s Ratio Perm			0.43					0.04		c0.51
v/c Ratio	0.96	0.20	0.77	0.94	1.38dr		1.07	0.26	1.13	1.16
Uniform Delay, d1	36.4	15.0	23.2	54.3	47.5		56.0	48.6	56.0	37.5
Progression Factor	0.90	0.74	0.61	1.08	0.75		1.00	1.00	1.00	1.00
Incremental Delay, d2	2.3	0.0	0.6	14.5	49.3		57.9	0.5	78.4	79.9
Delay (s)	35.2	11.2	14.9	73.0	84.7		113.9	49.2	134.4	117.4
Level of Service	D	B	B	E	F		F	D	F	F
Approach Delay (s)		24.4			81.6		88.1		122.7	
Approach LOS		C			F		F		F	

Intersection Summary			
HCM Average Control Delay	72.9	HCM Level of Service	E
HCM Volume to Capacity ratio	1.13		
Actuated Cycle Length (s)	135.0	Sum of lost time (s)	12.0
Intersection Capacity Utilization	Err%	ICU Level of Service	H
Analysis Period (min)	15		

dr Defacto Right Lane. Recode with 1 though lane as a right lane.

c Critical Lane Group

Movement	EBL	EBT	EBR	WBL	WBT	WBR	NBL	NBT	NBR	SBL	SBT	SBR
Lane Configurations												
Ideal Flow (vphpl)	1900	1900	1900	1900	1900	1900	1900	1900	1900	1900	1900	1900
Total Lost time (s)		4.0			4.0	4.0	4.0		4.0			
Lane Util. Factor		0.95			0.91	1.00	0.97		1.00			
Frt		1.00			1.00	0.85	1.00		0.85			
Flt Protected		1.00			1.00	1.00	0.95		1.00			
Satd. Flow (prot)		3539			5085	1583	3433		1583			
Flt Permitted		1.00			1.00	1.00	0.95		1.00			
Satd. Flow (perm)		3539			5085	1583	3433		1583			
Volume (vph)	0	1066	0	0	474	322	519	0	397	0	0	0
Peak-hour factor, PHF	0.93	0.93	0.93	0.92	0.92	0.92	0.87	0.87	0.87	0.90	0.90	0.90
Adj. Flow (vph)	0	1146	0	0	515	350	597	0	456	0	0	0
RTOR Reduction (vph)	0	0	0	0	0	129	0	0	29	0	0	0
Lane Group Flow (vph)	0	1146	0	0	515	221	597	0	427	0	0	0
Turn Type						Perm	Prot		custom			
Protected Phases		2			6		8					
Permitted Phases						6			8			
Actuated Green, G (s)		84.4			84.4	84.4	40.6		40.6			
Effective Green, g (s)		85.4			85.4	85.4	41.6		41.6			
Actuated g/C Ratio		0.63			0.63	0.63	0.31		0.31			
Clearance Time (s)		5.0			5.0	5.0	5.0		5.0			
Vehicle Extension (s)		5.0			5.0	5.0	3.0		3.0			
Lane Grp Cap (vph)		2239			3217	1001	1058		488			
v/s Ratio Prot		c0.32			0.10		0.17					
v/s Ratio Perm						0.14			c0.27			
v/c Ratio		0.51			0.16	0.22	0.56		0.87			
Uniform Delay, d1		13.5			10.1	10.6	39.1		44.2			
Progression Factor		0.61			0.30	0.68	1.00		1.00			
Incremental Delay, d2		0.6			0.1	0.5	0.7		15.9			
Delay (s)		8.9			3.2	7.6	39.8		60.2			
Level of Service		A			A	A	D		E			
Approach Delay (s)		8.9			5.0			48.6			0.0	
Approach LOS		A			A			D			A	

Intersection Summary			
HCM Average Control Delay	21.5	HCM Level of Service	C
HCM Volume to Capacity ratio	0.63		
Actuated Cycle Length (s)	135.0	Sum of lost time (s)	8.0
Intersection Capacity Utilization	137.9%	ICU Level of Service	H
Analysis Period (min)	15		
c Critical Lane Group			

Movement	EBL	EBT	EBR	WBL	WBT	WBR	NBL	NBT	NBR	SBL	SBT	SBR
Lane Configurations												
Ideal Flow (vphpl)	1900	1900	1900	1900	1900	1900	1900	1900	1900	1900	1900	1900
Total Lost time (s)		4.0	4.0	4.0	4.0					4.0		4.0
Lane Util. Factor		0.91	1.00	0.97	0.91					0.97		0.88
Frt		1.00	0.85	1.00	1.00					1.00		0.85
Flt Protected		1.00	1.00	0.95	1.00					0.95		1.00
Satd. Flow (prot)		5085	1583	3433	5085					3433		2787
Flt Permitted		1.00	1.00	0.95	1.00					0.95		1.00
Satd. Flow (perm)		5085	1583	3433	5085					3433		2787
Volume (vph)	0	1855	241	156	837	0	0	0	0	558	0	748
Peak-hour factor, PHF	0.95	0.95	0.95	0.92	0.92	0.92	0.90	0.90	0.90	0.92	0.92	0.92
Adj. Flow (vph)	0	1953	254	170	910	0	0	0	0	607	0	813
RTOR Reduction (vph)	0	0	74	0	0	0	0	0	0	0	0	201
Lane Group Flow (vph)	0	1953	180	170	910	0	0	0	0	607	0	612
Turn Type			Perm	Prot						Prot		custom
Protected Phases		2		1	6					4		4
Permitted Phases			2									
Actuated Green, G (s)		73.2	73.2	11.6	89.8					35.2		35.2
Effective Green, g (s)		74.2	74.2	12.6	90.8					36.2		36.2
Actuated g/C Ratio		0.55	0.55	0.09	0.67					0.27		0.27
Clearance Time (s)		5.0	5.0	5.0	5.0					5.0		5.0
Vehicle Extension (s)		5.0	5.0	3.0	5.0					3.0		3.0
Lane Grp Cap (vph)		2795	870	320	3420					921		747
v/s Ratio Prot		c0.38		c0.05	0.18					0.18		c0.22
v/s Ratio Perm			0.11									
v/c Ratio		0.70	0.21	0.53	0.27					0.66		0.82
Uniform Delay, d1		22.2	15.4	58.4	8.8					43.9		46.3
Progression Factor		0.29	0.11	1.25	0.75					1.00		1.00
Incremental Delay, d2		0.4	0.1	1.6	0.2					1.7		7.0
Delay (s)		6.9	1.8	74.6	6.8					45.6		53.4
Level of Service		A	A	E	A					D		D
Approach Delay (s)		6.3			17.5			0.0			50.1	
Approach LOS		A			B			A			D	

Intersection Summary			
HCM Average Control Delay	22.1	HCM Level of Service	C
HCM Volume to Capacity ratio	0.72		
Actuated Cycle Length (s)	135.0	Sum of lost time (s)	12.0
Intersection Capacity Utilization	66.2%	ICU Level of Service	C
Analysis Period (min)	15		
c Critical Lane Group			

Movement	EBL	EBT	EBR	WBL	WBT	WBR	NBL	NBT	NBR	SBL	SBT	SBR
Lane Configurations		↑↑			↑↑↑	↱	↰↑↑		↱			
Ideal Flow (vphpl)	1900	1900	1900	1900	1900	1900	1900	1900	1900	1900	1900	1900
Total Lost time (s)		4.0			4.0	4.0	4.0		4.0			
Lane Util. Factor		0.95			0.91	1.00	0.97		1.00			
Frt		1.00			1.00	0.85	1.00		0.85			
Flt Protected		1.00			1.00	1.00	0.95		1.00			
Satd. Flow (prot)		3539			5085	1583	3433		1583			
Flt Permitted		1.00			1.00	1.00	0.95		1.00			
Satd. Flow (perm)		3539			5085	1583	3433		1583			
Volume (vph)	0	1115	0	0	1281	753	564	0	375	0	0	0
Peak-hour factor, PHF	0.93	0.93	0.93	0.92	0.92	0.92	0.87	0.87	0.87	0.90	0.90	0.90
Adj. Flow (vph)	0	1199	0	0	1392	818	648	0	431	0	0	0
RTOR Reduction (vph)	0	0	0	0	0	240	0	0	39	0	0	0
Lane Group Flow (vph)	0	1199	0	0	1392	578	648	0	392	0	0	0
Turn Type						Perm	Prot		custom			
Protected Phases		2			6		8					
Permitted Phases						6			8			
Actuated Green, G (s)		82.7			82.7	82.7	37.3		37.3			
Effective Green, g (s)		83.7			83.7	83.7	38.3		38.3			
Actuated g/C Ratio		0.64			0.64	0.64	0.29		0.29			
Clearance Time (s)		5.0			5.0	5.0	5.0		5.0			
Vehicle Extension (s)		5.0			5.0	5.0	3.0		3.0			
Lane Grp Cap (vph)		2279			3274	1019	1011		466			
v/s Ratio Prot		0.34			0.27		0.19					
v/s Ratio Perm						c0.37			c0.25			
v/c Ratio		0.53			0.43	0.57	0.64		0.84			
Uniform Delay, d1		12.5			11.4	13.0	39.9		43.0			
Progression Factor		0.32			0.52	0.28	1.00		1.00			
Incremental Delay, d2		0.6			0.2	1.2	1.4		12.9			
Delay (s)		4.6			6.1	4.8	41.3		55.9			
Level of Service		A			A	A	D		E			
Approach Delay (s)		4.6			5.6			47.1			0.0	
Approach LOS		A			A			D			A	

Intersection Summary			
HCM Average Control Delay	15.3	HCM Level of Service	B
HCM Volume to Capacity ratio	0.65		
Actuated Cycle Length (s)	130.0	Sum of lost time (s)	8.0
Intersection Capacity Utilization	161.7%	ICU Level of Service	H
Analysis Period (min)	15		
c Critical Lane Group			

HCM Signalized Intersection Capacity Analysis
2: SR-248 & SB Ramp

PM Peak Loop

Movement	EBL	EBT	EBR	WBL	WBT	WBR	NBL	NBT	NBR	SBL	SBT	SBR
Lane Configurations												
Ideal Flow (vphpl)	1900	1900	1900	1900	1900	1900	1900	1900	1900	1900	1900	1900
Total Lost time (s)		4.0	4.0	4.0	4.0					4.0		4.0
Lane Util. Factor		0.91	1.00	0.97	0.91					0.97		0.88
Frt		1.00	0.85	1.00	1.00					1.00		0.85
Flt Protected		1.00	1.00	0.95	1.00					0.95		1.00
Satd. Flow (prot)		5085	1583	3433	5085					3433		2787
Flt Permitted		1.00	1.00	0.95	1.00					0.95		1.00
Satd. Flow (perm)		5085	1583	3433	5085					3433		2787
Volume (vph)	0	1842	770	540	1305	0	0	0	0	595	0	1308
Peak-hour factor, PHF	0.95	0.95	0.95	0.92	0.92	0.92	0.90	0.90	0.90	0.92	0.92	0.92
Adj. Flow (vph)	0	1939	811	587	1418	0	0	0	0	647	0	1422
RTOR Reduction (vph)	0	0	284	0	0	0	0	0	0	0	0	31
Lane Group Flow (vph)	0	1939	527	587	1418	0	0	0	0	647	0	1391
Turn Type			Perm	Prot						Prot		custom
Protected Phases		2		1	6					4		4
Permitted Phases			2									
Actuated Green, G (s)		44.0	44.0	19.0	68.0					52.0		52.0
Effective Green, g (s)		45.0	45.0	20.0	69.0					53.0		53.0
Actuated g/C Ratio		0.35	0.35	0.15	0.53					0.41		0.41
Clearance Time (s)		5.0	5.0	5.0	5.0					5.0		5.0
Vehicle Extension (s)		5.0	5.0	3.0	5.0					3.0		3.0
Lane Grp Cap (vph)		1760	548	528	2699					1400		1136
v/s Ratio Prot		c0.38		c0.17	0.28					0.19		c0.50
v/s Ratio Perm			0.33									
v/c Ratio		1.10	0.96	1.11	0.53					0.46		1.22
Uniform Delay, d1		42.5	41.6	55.0	19.8					28.1		38.5
Progression Factor		0.94	0.86	0.88	0.88					1.00		1.00
Incremental Delay, d2		46.7	5.5	71.4	0.7					0.2		109.1
Delay (s)		86.8	41.3	119.8	18.1					28.3		147.6
Level of Service		F	D	F	B					C		F
Approach Delay (s)		73.4			47.9			0.0			110.3	
Approach LOS		E			D			A			F	

Intersection Summary			
HCM Average Control Delay	77.1	HCM Level of Service	E
HCM Volume to Capacity ratio	1.16		
Actuated Cycle Length (s)	130.0	Sum of lost time (s)	12.0
Intersection Capacity Utilization	78.0%	ICU Level of Service	D
Analysis Period (min)	15		
c Critical Lane Group			

ACCIDENT RATE CALCULATIONS

LOCATION:
STATE ROUTE 248
From bridge at Five Mile Creek (log mile 3.47)
Truck Stop driveway east of I-65 interchange (log mile 3.79)

	(SECTION)
PERIOD OF STUDY:	1999-2001
TYPE OF HIGHWAY:	2-lane rural arterial
NUMBER OF DAYS IN STUDY:	1095
NUMBER OF ACCIDENTS :	28
STATEWIDE AVG. (ACC/MV) (Ra):	1.77
2000 ADT	13520
LENGTH OF STUDY SECTION	0.32

	(CALCULATIONS)
	SECTION
EXPOSURE.....:	4,737,408.00
EXPOSURE RATE.....:	4.74

	(RESULTS)
	SECTION (ACC/MVM)
ACTUAL ACCIDENT RATE..:	5.91
CRITICAL ACCIDENT RATE:	3.30
ACTUAL/CRITICAL.:	1.79
ACTUAL/STATEWIDE:	3.34

ACCIDENT RATE SUMMARY

County: Williamson City: _____ Date: 1/20/05
Route: SR 248 Log Mile Beginning: 3.47 Log Mile Ending: 3.79
Location on Route: From bridge at Five Mile Creek to Truck Stop

(X) Street Section ( ) Spot ( ) Intersection

ADT 13520 (V) ADT _____ (V) Entering Volume = $\frac{\text{Sum of ADT}}{2}$ _____ (V)
Length (Miles) 0.32 (L)

Number of Accidents
Time Period of Accident Data: From 1999 to 2001 — 28 (A)
Number of Days in Study — 1095 (T)
Highway Type 2-ln rural arterial
Statewide Average Rate — 1.77 (Ra)

Exposure Rate (E)

Street Section:

$$E = \frac{V \times T \times L}{1{,}000{,}000} = \frac{(13520) \times (1095) \times (0.32)}{1{,}000{,}000}$$ 4.74 (E)

Intersection/Spot

$$E = \frac{V \times T}{1{,}000{,}000} = \frac{(\quad) \times (\quad)}{1{,}000{,}000}$$ _____ (E)

Actual Accident Rate (R)

$$R = \frac{A}{E} = \frac{(28)}{(4.74)} =$$ 5.91 (R)

Critical Accident Rate (Rc) - Confidence level 99%

$$Rc = Ra + 2.327\sqrt{Ra/E} + 1/2E$$

$$Rc = (1.77) + 2.327\sqrt{\frac{(1.77)}{(4.74)}} + \frac{1}{2(4.74)} =$$

$$Rc = (1.77) + 2.327 \times (.611) + \frac{1}{(9.48)} =$$

$$Rc = (1.77) + (1.42) + (0.105) =$$ 3.30 (Rc)

Sererity Index (SI)

$$SI = \frac{\text{(No. of Fatal Accidents)} + \text{(No. of Injury Accidents)}}{\text{(Total Number of Accidents)}}$$

$$SI = \frac{(0) + (6)}{(28)} =$$ 0.21 (SI)

SUMMARY: Actual Accident Rate 5.91 Severity Index 0.21
Statewide Average Rate 1.77 Ratio : R/Rc 1.79
Critical Accident Rate 3.30

LOCATION:
INTERSTATE 65
From south SR 248 interchange (log mile 8.5)
To north of SR 248 interchange (log mile 8.99)

	(SECTION)	
PERIOD OF STUDY:	1999-2001	
TYPE OF HIGHWAY:	4-lane interstate	
NUMBER OF DAYS IN STUDY:	1095	
NUMBER OF ACCIDENTS :	32	
STATEWIDE AVG. (ACC/MV) (Ra):	0.45	
2000 ADT	47170	(average of north & south ADTs
LENGTH OF STUDY SECTION	0.49	

	(CALCULATIONS) SECTION
EXPOSURE.....:	25,309,063.50
EXPOSURE RATE.....:	25.31

	(RESULTS) SECTION (ACC/MVM)
ACTUAL ACCIDENT RATE..:	1.26
CRITICAL ACCIDENT RATE:	0.78
ACTUAL/CRITICAL.:	1.62
ACTUAL/STATEWIDE:	2.81

ACCIDENT RATE SUMMARY

County: Williamson City: _____ Date: 1/20/05
Route: I-65 Log Mile Beginning: 8.5 Log Mile Ending: 8.99
Location on Route: at interchange with SR 248

(X) Street Section ( ) Spot ( ) Intersection

ADT 47,170 (V) ADT _____ (V) Entering Volume = $\frac{\text{Sum of ADT}}{2}$ _____ (V)
Length (Miles) 0.49 (L)

Number of Accidents 32 (A)
Time Period of Accident Data: From 1999 to 2001
Number of Days in Study 1095 (T)
Highway Type 4-ln. freeway
Statewide Average Rate 0.45 (Ra)

Exposure Rate (E)

Street Section:

$$E = \frac{V \times T \times L}{1{,}000{,}000} = \frac{(47170) \times (1095) \times (0.49)}{1{,}000{,}000}$$ 25.31 (E)

Intersection/Spot

$$E = \frac{V \times T}{1{,}000{,}000} = \frac{(\quad) \times (\quad)}{1{,}000{,}000}$$ _____ (E)

Actual Accident Rate (R)

$$R = \frac{A}{E} = \frac{(32)}{(25.31)} =$$ 1.26 (R)

Critical Accident Rate (Rc) - Confidence level 99%

$$Rc = Ra + 2.327\sqrt{Ra/E} + 1/2E$$

$$Rc = (0.45) + 2.327\sqrt{\frac{(0.45)}{(25.31)}} + \frac{1}{2(25.31)} =$$

$$Rc = (0.45) + 2.327 \times (0.13) + \frac{1}{(50.62)} =$$

$$Rc = (0.45) + (0.31) + (0.02) =$$ 0.78 (Rc)

Sererity Index (SI)

$$SI = \frac{\text{(No. of Fatal Accidents)} + \text{(No. of Injury Accidents)}}{\text{(Total Number of Accidents)}}$$

$$SI = \frac{(0) + (8)}{(32)} =$$ 0.25 (SI)

SUMMARY: Actual Accident Rate 1.26 Severity Index 0.25
Statewide Average Rate 0.45 Ratio : R/Rc 1.62
Critical Accident Rate 0.78