STD71.DGN

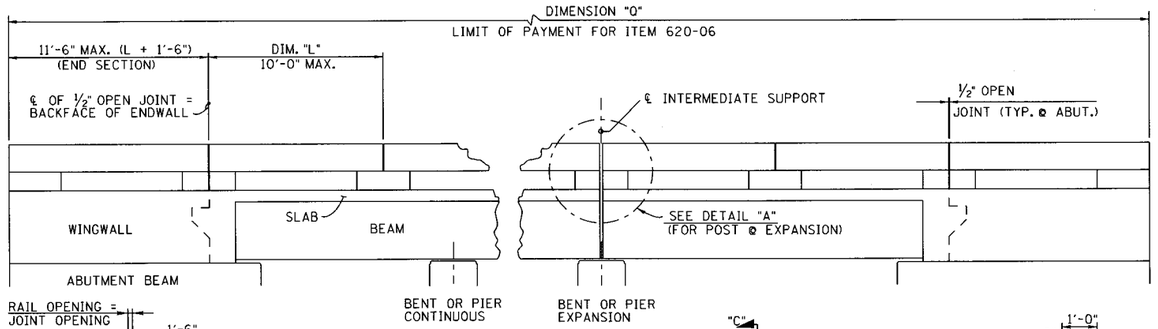

6 ELEVATION

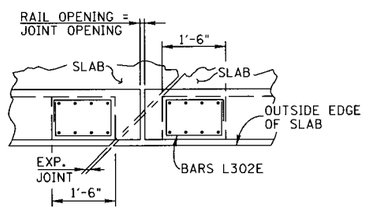

PLAN OF POST @ SKEWED EXPANSION JOINT DETAIL "A" 6 7

(TYP. @ ANY EXPANSION OR CONSTRUCTION JOINT)

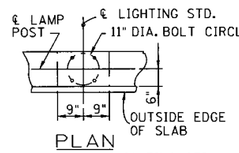

PLAN

FOR LOCATION OF LIGHTING STD. IF APPLICABLE, SEE LAYOUT DWG.

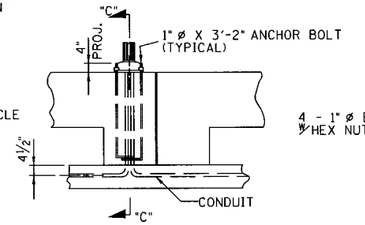

LIGHT STANDARD MOUNTING AND CONDUIT PLACEMENT DETAILS

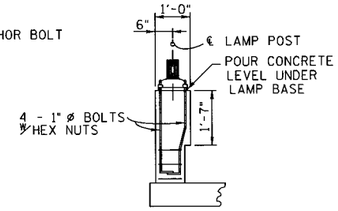

SECTION "C"-"C" 8

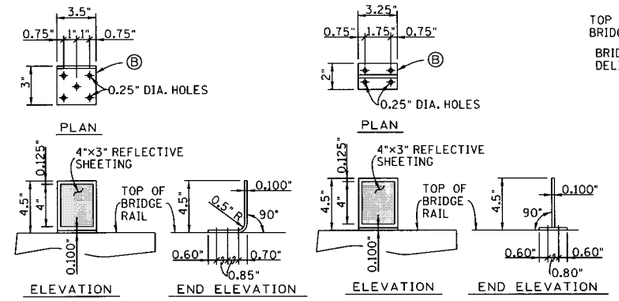

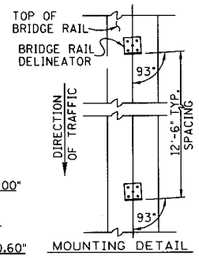

MOUNTING DETAIL

PROJECT NO.	YEAR	SHEET NO.
	1987	

REVISIONS

NO.	DATE	BY	BRIEF DESCRIPTION
1	10-25-93	R.M.D.	COLOR OF DELINEATOR
2	12-20-93	RMD	ADDED ALT. MOUNT FOR DELINEATOR
3	3-28-94	MAH	REVISED NOTE
4	12-18-95	BRB	REVISED SPACING OF WINGPOST REINF. AND REVISED LENGTH OF BOLT
5	5-21-99	CMH	REVISED NOTE B @ DELINEATORS
6	7-31-00	CMH	REVISED ELEVATION SHOWING JOINT LOCATION @ BACKFACE OF ENDWALL. EXPANSION JOINT DETAIL "A", BAR DETAILS INTERIOR @ WING POST REINFORCING
7	11-1-10	JHW	EPOXY COAT STEEL @ NOTE
8	6-2-14	JHW	CHANGED HT. TO 2'-8"; GEN. REV.

5 1 BRIDGE RAIL DELINEATOR

5 2 B BRIDGE RAIL DELINEATORS SHALL BE HIGH IMPACT, UV-STABILIZED, ENGINEERED THERMOPLASTIC OR POLYCARBONATE SUBSTRATE. SEE TDOT APPROVED QUALIFIED PRODUCT LISTS FOR ACCEPTABLE PRODUCTS.

5 1 BRIDGE RAIL DELINEATOR REFLECTIVE SHEETING SHALL MEET ASTM D4956, TYPE V SPECIFICATIONS. THE REFLECTIVE SHEETING SHALL BE A MINIMUM OF 4"×3" AND HAVE MINIMUM COVEREGE AREA OF 12 SQUARE INCHES. THE COLOR OF THE DELINEATORS SHALL CONFORM TO THE REQUIREMENTS OUTLINED IN MANUAL ON UNIFORM TRAFFIC CONTROL DEVICES. BRIDGE RAIL DELINEATORS WILL NOT BE REQUIRED IN AREAS WHERE ROADWAY IS LIGHTED.

5 3 BRIDGE RAIL DELINEATORS SHALL BE MOUNTED TO THE CONCRETE PARAPET WITH A ONE COMPONENT ADHESIVE AS RECOMMENDED BY THE MANUFACTURER. THEY SHALL BE INSTALLED NO EARLIER THAN THREE WEEKS AFTER THE TEXTURE COATING HAS BEEN APPLIED.

5 2 THE COST OF FURNISHING AND INSTALLING BRIDGE RAIL DELINEATORS, INCLUDING ALL MATERIALS, LABOR AND INCIDENTALS NECESSARY TO COMPLETE THE INSTALLATION, SHALL BE INCLUDED IN BID PRICE FOR CONCRETE BRIDGE RAIL.

GENERAL NOTES:

1) SPECIFICATIONS: STANDARD ROAD AND BRIDGE SPECIFICATIONS OF THE TENNESSEE DEPT. OF TRANSPORTATION CURRENT EDITION.

2) DESIGN SPECIFICATIONS: AASHTO CURRENT EDITION WITH ADDENDA.

3) CONCRETE: TO BE CLASS "A".

7 4) REINFORCING STEEL: TO BE ASTM A615 GRADE 60. STANDARD CRSI HOOK DETAILS APPLY UNLESS OTHERWISE NOTED ON THE BILL OF STEEL. SPACING DIMENSIONS ARE CENTER TO CENTER UNLESS OTHERWISE NOTED ON DETAIL DRAWINGS. IF BARS IN BRIDGE DECK ARE NOT EPOXY COATED, THEN THE BARS IN THE RAIL NEED NOT BE EPOXY COATED. COST TO BE INCLUDED IN UNIT PRICE BID FOR RAIL.

5) FOR DIMENSIONS "Q" AND "L" SEE LAYOUT SHEET OF STRUCTURES. MAX. "L" = 10'-0" "Q" = OUT TO OUT WINGPOST.

6) ALL POSTS SHALL BE VERTICAL. RAIL SHALL CONFORM TO LINE AND GRADE OF ROADWAY.

7) PAYMENT FOR CONCRETE RAIL SHALL BE BASED ON LINEAR FEET FROM END OF WINGPOST TO END OF WINGPOST.

8) RAILING SHALL NOT BE CONSTRUCTED ON ANY STRUCTURE UNTIL THE FALSEWORK HAS BEEN STRUCK.

8 9) THIS RAIL IS SIMILAR TO ONE THAT HAS BEEN SUCCESSFULLY CRASH TESTED TO THE SATISFACTION OF THE FEDERAL HIGHWAY ADMINISTRATION AND IS RECOMMENDED FOR USE IN FHWA BRIDGE RAIL GUIDE 2005 - LEVEL TL-4.

10) BASIS OF PAYMENT SHALL INCLUDE ALL MISCELLANEOUS ITEMS TO COMPENSATE FOR ALL LABOR, MATERIALS, TOOLS AND INCIDENTALS FOR THE ENTIRE CONCRETE RAIL SHALL BE INCLUDED IN THE PRICE BID FOR ITEM 620-06.

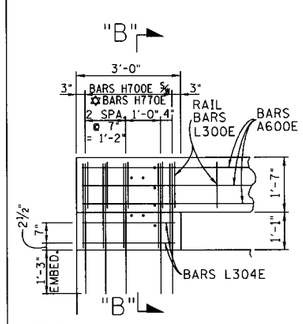

8 7 6 4 ELEVATION

@ END POST

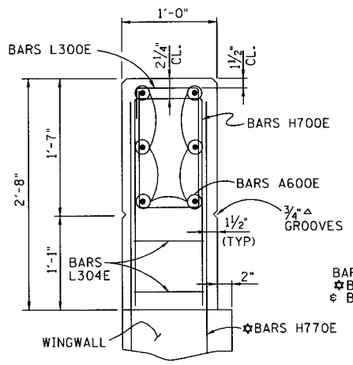

8 7 6 SECTION "B"-"B"

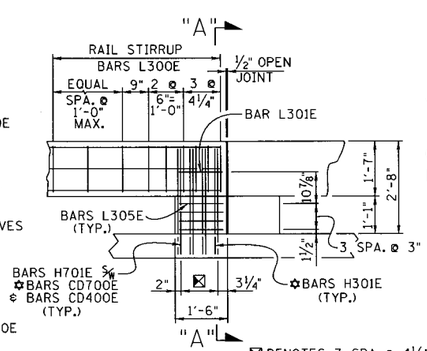

8 7 6 ELEVATION

@ INTERIOR POST WITH ½" OPEN JOINT

☒ DENOTES: 3 SPA. @ 4¼" = 1'-0¾"

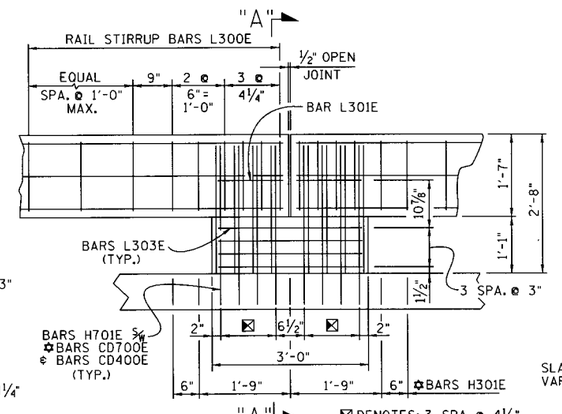

8 7 6 ELEVATION

@ INTERIOR POST WITHOUT ½" OPEN JOINT

☒ DENOTES: 3 SPA. @ 4¼" = 1'-0¾"

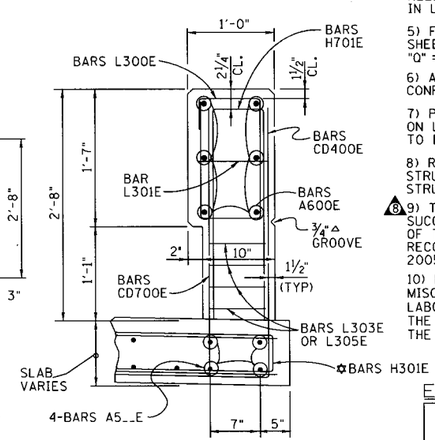

8 7 6 SECTION "A"-"A"

ESTIMATED QUANTITIES 8

	ITEMS	CLASS "A" CONCRETE CY.	EPOXY COATED REINF. STEEL LB.
8 ✳	ONE INTER. POST, 90°	0.2762	140.7
6 4	ONE WING POST, 90°	0.2963	96.5
	ONE LINEAR FT. RAIL	0.0586	10.8
✳✳	ONE INTER. POST, 90°	0.1381	64.6

✳ DENOTES: INTERIOR POST ARE 3'-0" WITHOUT ½" OPEN JOINT.

✳✳ DENOTES: INTERIOR POST ARE 1'-6" WITH ½" OPEN JOINT.

MINOR REVISION - FHWA APPROVAL NOT REQUIRED

STATE OF TENNESSEE
DEPARTMENT OF TRANSPORTATION

STANDARD CONCRETE RAIL 1987

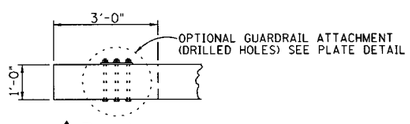

4 PLAN

FERRULE SHALL HAVE CLOSED ENDS AND TAPPED OVERSIZED AS SPECIFIED BY ASTM A563, TABLE 5. ASSEMBLY SHALL BE BOLTED TO FORMS, (HAND TIGHT), DURING CONCRETE POURING AND CURING.

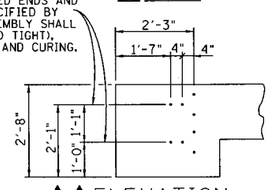

8 4 ELEVATION

FOR USE WHEN GUARDRAIL ATTACHMENTS REQUIRED

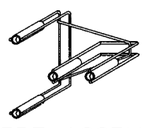

4 INSERT ASSEMBLY

CAST IN PLACE THREADED STEEL INSERT WITH ⅞" ø × 2" HEX HEAD GALVANIZED BOLTS (A307) HOT DIP ZINC COATING ASTM A153

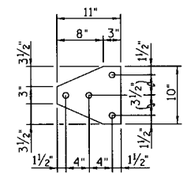

4 PLATE DETAIL

½" ASTM A36 GALVANIZED PLATE WITH ⅞" ø HEX HEAD GALVANIZED BOLTS (A307) HOT DIP ZINC COATING A153

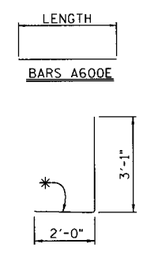

8 BARS CD700E & CD400E ✡

✳ BEND THIS LEG TO MATCH SLOPE OF ROADWAY

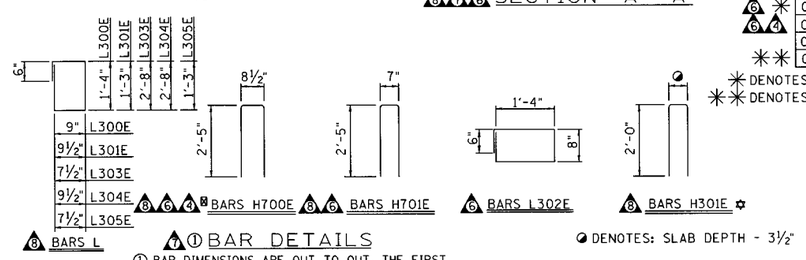

8 BARS L

8 6 4 8 BARS H700E 8 6 BARS H701E 6 BARS L302E 8 BARS H301E ✡

◐ DENOTES: SLAB DEPTH - 3½"

1 1 BAR DETAILS

1 BAR DIMENSIONS ARE OUT TO OUT. THE FIRST DIGIT OF THE BAR NUMBER INDICATES SIZE.

☒ DENOTES: BARS TO BE USED IN LIEU OF H701 ON WINGWALLS AND RETAINING WALLS.

8 6 ✡ BARS H770E TO BE INCLUDED IN REINFORCING QUANTITIES AND BILL OF STEEL FOR WINGWALLS.

✡ BARS H301E, CD700E & CD400E TO BE INCLUDED IN REINFORCING QUANTITIES AND BILL OF STEEL FOR SUPERSTRUCTURE.

NOTE: BARS LISTED IN ABOVE NOTES ARE NOT INCLUDED IN WING POST OR INTERIOR POST QUANTITIES SHOWN THIS SHEET.

DESIGNED BY SEE GEN. NOTE NO. 9 DATE
DRAWN BY K. PHILLIPS & M. SURDAM DATE 5-11-87
SUPERVISED BY JWF AND RMD DATE 5-11-87
CHECKED BY DATE

CORRECT Edward P. Wasserman
ENGINEER OF STRUCTURES

STD-7-1