CONST. NO. _____

PROJECT NO.	YEAR	SHEET NO.
	2010	

REVISIONS

NO.	DATE	BY	BRIEF DESCRIPTION

2 @ 10 x 7 REINFORCED CONCRETE SLAB BRIDGE

	Fill Height ft.	Dimensions ST in.	WT in.	IT in.	BW ft.	Bars TST Size	No.	Spacing in.	Length ft.	Bars TSB Size	No.	Spacing in.	Length ft.	Bars EWE Size	No.	Spacing in.	Length ft.	Bars EWI Size	No.	Spacing in.	Length ft.	Bars IW Size	No.	Spacing in.	Length ft.	Bars LNT No.	Bars LND No.	Bars WS No.	Bars WF No.	Bars EWF Length ft.	Bars IWF Length ft.	Concrete CY/LF	Reinf. Steel LB/LF
Continuous	No Fill	10.5	8	8	22.00	6	2	6	21.50	8	1	12	21.50	4	2	12	5.50	5	2	12	5.50	4	2	12	5.50	61	20	3	3	1.67	1.67	1.48	301
	3	13	8	8	22.00	7	2	6	21.50	6	2	6	21.50	4	2	12	5.50	5	2	12	5.50	4	2	12	5.50	61	20	3	3	1.67	1.67	1.65	332
	5	13	8	8	22.00	6	2	6	21.50	5	2	6	21.50	4	2	12	5.50	5	2	12	5.50	4	2	12	5.50	83	0	3	3	1.67	1.67	1.65	282
	10	13	8	8	22.00	8	2	6	21.50	5	2	6	21.50	4	2	12	5.50	5	2	12	5.50	4	2	12	5.50	83	0	3	3	1.67	1.67	1.65	333
Moment Break	20	12	8	8	22.00	4	2	12	10.66	8	2	6	21.50	4	2	12	5.50	5	2	12	5.50	4	2	12	5.50	83	0	3	3	1.67	1.67	1.58	302
	30	18	8	8	22.00	4	2	12	10.66	7	2	6	21.50	4	2	12	5.50	6	2	12	5.50	5	2	12	5.50	83	0	3	3	1.67	1.67	1.99	284
	40	22	9	8	22.17	4	2	12	10.66	7	2	6	21.67	4	2	12	5.50	5	2	12	5.50	5	2	12	5.50	83	0	3	3	1.75	1.67	2.32	280
	50	25	10	8	22.33	4	2	12	10.66	8	2	6	21.83	4	2	12	5.50	5	2	12	5.50	4	4	6	5.50	83	0	3	3	1.83	1.67	2.58	311
	60	29	11	8	22.50	4	2	12	10.66	9	2	6	22.00	4	2	12	5.50	5	2	12	5.50	7	2	12	5.50	83	0	3	3	1.92	1.67	2.91	352

2 @ 10 x 8 REINFORCED CONCRETE SLAB BRIDGE

	Fill Height ft.	Dimensions ST in.	WT in.	IT in.	BW ft.	Bars TST Size	No.	Spacing in.	Length ft.	Bars TSB Size	No.	Spacing in.	Length ft.	Bars EWE Size	No.	Spacing in.	Length ft.	Bars EWI Size	No.	Spacing in.	Length ft.	Bars IW Size	No.	Spacing in.	Length ft.	Bars LNT No.	Bars LND No.	Bars WS No.	Bars WF No.	Bars EWF Length ft.	Bars IWF Length ft.	Concrete CY/LF	Reinf. Steel LB/LF
Continuous	No Fill	10.5	8	8	22.00	6	2	6	21.50	8	1	12	21.50	4	2	12	6.50	5	2	12	6.50	4	2	12	6.50	67	20	3	3	1.67	1.67	1.56	310
	3	13	8	8	22.00	7	2	6	21.50	6	2	6	21.50	4	2	12	6.50	5	2	12	6.50	4	2	12	6.50	67	20	3	3	1.67	1.67	1.73	340
	5	13	8	8	22.00	6	2	6	21.50	5	2	6	21.50	4	2	12	6.50	5	2	12	6.50	4	2	12	6.50	89	0	3	3	1.67	1.67	1.73	291
	10	13	8	8	22.00	8	2	6	21.50	5	2	6	21.50	4	2	12	6.50	6	2	12	6.50	4	2	12	6.50	89	0	3	3	1.67	1.67	1.73	347
Moment Break	20	12	8	8	22.00	4	2	12	10.66	8	2	6	21.50	4	2	12	6.50	5	4	6	6.50	4	2	12	6.50	89	0	3	3	1.67	1.67	1.66	324
	30	18	9	8	22.17	4	2	12	10.66	7	2	6	21.67	4	2	12	6.50	6	2	12	6.50	5	2	12	6.50	89	0	3	3	1.75	1.67	2.12	296
	40	22	10	8	22.33	4	2	12	10.66	7	2	6	21.83	4	2	12	6.50	5	4	6	6.50	5	2	12	6.50	89	0	3	3	1.83	1.67	2.46	304
	50	25	11	8	22.50	4	2	12	10.66	8	2	6	22.00	4	2	12	6.50	6	2	12	6.50	4	4	6	6.50	89	0	3	3	1.92	1.67	2.73	329
	60	29	12	8	22.67	4	2	12	10.66	9	2	6	22.17	4	2	12	6.50	6	2	12	6.50	7	2	12	6.50	89	0	3	3	2.00	1.67	3.07	371

2 @ 10 x 9 REINFORCED CONCRETE SLAB BRIDGE

	Fill Height ft.	Dimensions ST in.	WT in.	IT in.	BW ft.	Bars TST Size	No.	Spacing in.	Length ft.	Bars TSB Size	No.	Spacing in.	Length ft.	Bars EWE Size	No.	Spacing in.	Length ft.	Bars EWI Size	No.	Spacing in.	Length ft.	Bars IW Size	No.	Spacing in.	Length ft.	Bars LNT No.	Bars LND No.	Bars WS No.	Bars WF No.	Bars EWF Length ft.	Bars IWF Length ft.	Concrete CY/LF	Reinf. Steel LB/LF
Continuous	No Fill	10.5	8	8	22.00	6	2	6	21.50	8	1	12	21.50	4	2	12	7.50	5	2	12	7.50	4	2	12	7.50	73	20	3	3	1.67	1.67	1.63	319
	3	13	8	8	22.00	7	2	6	21.50	6	2	6	21.50	4	2	12	7.50	5	2	12	7.50	4	2	12	7.50	73	20	3	3	1.67	1.67	1.80	349
	5	13	8	8	22.00	6	2	6	21.50	5	2	6	21.50	4	2	12	7.50	6	2	12	7.50	4	2	12	7.50	95	0	3	3	1.67	1.67	1.80	307
	10	13	8	8	22.00	8	2	6	21.50	5	2	6	21.50	4	2	12	7.50	6	2	12	7.50	4	2	12	7.50	95	0	3	3	1.67	1.67	1.80	357
Moment Break	20	12	8	8	22.00	4	2	12	10.67	8	2	6	21.50	4	2	12	7.50	6	4	6	7.50	4	2	12	7.50	95	0	3	3	1.67	1.67	1.73	349
	30	18	10	8	22.33	4	2	12	10.67	7	2	6	21.83	4	2	12	7.50	6	4	6	7.50	5	2	12	7.50	95	0	3	3	1.83	1.67	2.27	329
	40	22	11	8	22.50	4	2	12	10.67	7	2	6	22.00	4	2	12	7.50	6	4	6	7.50	5	2	12	7.50	95	0	3	3	1.92	1.67	2.61	330
	50	25	13	8	22.83	4	2	12	10.67	8	2	6	22.33	4	2	12	7.50	5	4	6	7.50	4	4	6	7.50	95	0	3	3	2.08	1.67	2.96	350
	60	29	14	8	23.00	4	2	12	10.67	9	2	6	22.50	4	2	12	7.50	5	4	6	7.50	7	2	12	7.50	97	0	3	3	2.17	1.67	3.31	396

2 @ 10 x 10 REINFORCED CONCRETE SLAB BRIDGE

	Fill Height ft.	Dimensions ST in.	WT in.	IT in.	BW ft.	Bars TST Size	No.	Spacing in.	Length ft.	Bars TSB Size	No.	Spacing in.	Length ft.	Bars EWE Size	No.	Spacing in.	Length ft.	Bars EWI Size	No.	Spacing in.	Length ft.	Bars IW Size	No.	Spacing in.	Length ft.	Bars LNT No.	Bars LND No.	Bars WS No.	Bars WF No.	Bars EWF Length ft.	Bars IWF Length ft.	Concrete CY/LF	Reinf. Steel LB/LF
Continuous	No Fill	10.5	8	8	22.00	6	2	6	21.50	8	1	12	21.50	4	2	12	8.50	5	2	12	8.50	4	2	12	8.50	79	20	3	3	1.67	1.67	1.70	328
	3	13	8	8	22.00	7	2	6	21.50	6	2	6	21.50	4	2	12	8.50	5	2	12	8.50	4	2	12	8.50	79	20	3	3	1.67	1.67	1.87	358
	5	13	8	8	22.00	6	2	6	21.50	5	2	6	21.50	4	2	12	8.50	6	2	12	8.50	4	2	12	8.50	101	0	3	3	1.67	1.67	1.87	317
	10	13	8	8	22.00	8	2	6	21.50	5	2	6	21.50	4	2	12	8.50	6	4	6	8.50	4	2	12	8.50	101	0	3	3	1.67	1.67	1.87	392
Moment Break	20	12	9	8	22.17	4	2	12	10.67	8	2	6	21.67	4	2	12	8.50	6	4	6	8.50	4	2	12	8.50	101	0	3	3	1.75	1.67	1.87	363
	30	18	11	8	22.50	4	2	12	10.67	7	2	6	22.00	4	2	12	8.50	6	4	6	8.50	5	2	12	8.50	101	0	3	3	1.92	1.67	2.43	344
	40	22	13	8	22.83	4	2	12	10.67	7	2	6	22.33	4	2	12	8.50	6	4	6	8.50	5	2	12	8.50	101	0	3	3	2.08	1.67	2.85	345
	50	25	14	8	23.00	4	2	12	10.67	8	2	6	22.50	4	2	12	8.50	6	4	6	8.50	4	4	6	8.50	103	0	3	3	2.17	1.67	3.14	380
	60	29	16	8	23.33	4	2	12	10.67	9	2	6	22.83	4	2	12	8.50	6	4	6	8.50	7	2	12	8.50	103	0	3	3	2.33	1.67	3.57	428

Note: Maximum fill height is measured from the bottom of the top slab. To obtain the total fill height from the flow line, add the height of the box.
Note: When height of fill above the top slab is less than 1 foot, the top mat of reinforcing in the top slab shall be constructed with 2-1/2 inches of concrete cover.

The following bar information applies to all fill cases in the tables above:
Bars LNT Size = 4 Spacing = 12 in.
Bars LND Size = 5 Spacing = 12 in.
Bars WS Size = 8 Length = 5.00 ft. Spacing = 12 in.
Bars WF Size = 8 Length = 6.00 ft. Spacing = 12 in.
Bars IWF Size = 4 No. = 1 Spacing = 12 in.
Bars EWF Size = 4 No. = 2 Spacing = 12 in.

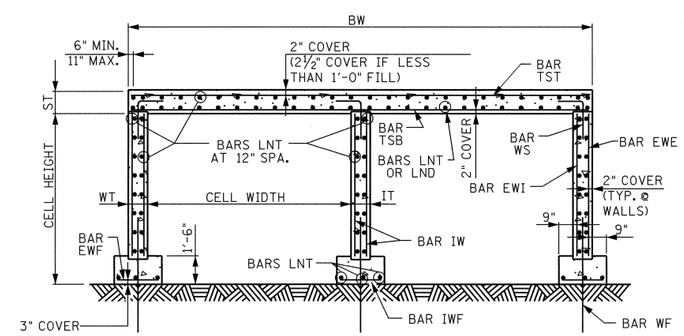

TYPICAL SECTION

NOTE: FOR DESCRIPTIONS OF BOX DIMENSIONS AND REINFORCING BAR DESIGNATIONS SEE STANDARD DRAWING NO. STD-17-5.

STATE OF TENNESSEE
DEPARTMENT OF TRANSPORTATION
STANDARD REINFORCED CONCRETE SLAB BRIDGE
INTERIOR SECTION
SPANS: 2 BARRELS AT 10'-0"
CLEAR HEIGHTS 7'-0" THRU 10'-0"
0' THRU 60' FILL
2010

CORRECT Edward P. Wasserman
ENGINEER OF STRUCTURES

DESIGNED BY	RLL/ALP	DATE	12-09
DRAWN BY	KEVIN MARTINKO	DATE	1-10
SUPERVISED BY	EPW/RLC	DATE	12-09
CHECKED BY	RLL/ALP	DATE	2-10

STD-17-135

DGN @ 100% \\tdot\ots\tdbxsea\tables\1-6-10\Offrdd Culvert Files 1-6-10\10' Span\STD-17-134&135_2barrel_slab10'.dgn 01/06/2010