STD-17-51_1BARREL_BOX6'.DGN

1 @ 6 x 3 REINFORCED CONCRETE BOX BRIDGE

Maximum Fill Height ft.	Dimensions ST in.	SB in.	WT in.	BW ft.	Bars TST Size	No.	Spacing in.	Length ft.	Bars TSB Size	No.	Spacing in.	Length ft.	Bars BST Size	No.	Spacing in.	Length ft.	Bars BSB Size	No.	Spacing in.	Length ft.	Bars EWE Size	No.	Spacing in.	Length ft.	Bars EWI Size	No.	Spacing in.	Length ft.	Bars LNT No.	Bars LND No.	Bars WS No.	Concrete CY/LF	Reinf. Steel LB/LF
No Fill	8.5	8	8	7.33	4	1	12	6.83	6	2	6	6.83	5	2	12	7.83	4	1	12	7.83	4	2	12	3.00	5	2	12	3.00	35	12	4	0.55	142
3	10	10	8	7.33	4	1	12	6.83	6	2	6	6.83	7	1	12	7.83	4	1	12	7.83	4	2	12	3.00	5	2	12	3.00	35	12	4	0.63	141
5	8	8	8	7.33	4	1	12	6.83	5	2	6	6.83	5	2	12	7.83	4	1	12	7.83	4	2	12	3.00	5	2	12	3.00	42	0	4	0.53	132
10	8	8	8	7.33	4	1	12	6.83	5	2	6	6.83	7	1	12	7.83	4	1	12	7.83	4	2	12	3.00	5	2	12	3.00	42	0	4	0.53	132
20	8	9	8	7.33	4	1	12	6.83	6	2	6	6.83	6	2	6	7.83	4	1	12	7.83	4	2	12	3.00	5	2	12	3.00	42	0	4	0.56	146
30	11	13	8	7.33	4	1	12	6.83	6	2	6	6.83	8	1	12	7.83	4	1	12	7.83	4	2	12	3.00	5	2	12	3.00	42	0	4	0.73	143
40	14	15	8	7.33	4	1	12	6.83	6	2	6	6.83	8	1	12	7.83	4	1	12	7.83	4	2	12	3.00	5	2	12	3.00	42	0	4	0.85	143
50	16	17	8	7.33	4	1	12	6.83	6	2	6	6.83	8	1	12	7.83	4	1	12	7.83	4	2	12	3.00	5	2	12	3.00	42	0	4	0.95	143
60	17	18	8	7.33	4	1	12	6.83	7	2	6	6.83	6	2	6	7.83	4	1	12	7.83	4	2	12	3.00	5	2	12	3.00	42	0	4	1.00	153

1 @ 6 x 4 REINFORCED CONCRETE BOX BRIDGE

Maximum Fill Height ft.	Dimensions ST in.	SB in.	WT in.	BW ft.	Bars TST Size	No.	Spacing in.	Length ft.	Bars TSB Size	No.	Spacing in.	Length ft.	Bars BST Size	No.	Spacing in.	Length ft.	Bars BSB Size	No.	Spacing in.	Length ft.	Bars EWE Size	No.	Spacing in.	Length ft.	Bars EWI Size	No.	Spacing in.	Length ft.	Bars LNT No.	Bars LND No.	Bars WS No.	Concrete CY/LF	Reinf. Steel LB/LF
No Fill	8.5	8	8	7.33	4	1	12	6.83	6	2	6	6.83	7	1	12	7.83	4	1	12	7.83	4	2	12	4.00	5	2	12	4.00	39	12	4	0.60	147
3	10	10	8	7.33	4	1	12	6.83	6	2	6	6.83	7	1	12	7.83	4	1	12	7.83	4	2	12	4.00	5	2	12	4.00	39	12	4	0.68	147
5	8	8	8	7.33	4	1	12	6.83	5	2	6	6.83	5	2	6	7.83	4	1	12	7.83	4	2	12	4.00	5	2	12	4.00	46	0	4	0.58	138
10	8	8	8	7.33	4	1	12	6.83	5	2	6	6.83	7	1	12	7.83	4	1	12	7.83	4	2	12	4.00	5	2	12	4.00	46	0	4	0.58	138
20	8	9	8	7.33	4	1	12	6.83	6	2	6	6.83	6	2	6	7.83	4	1	12	7.83	4	2	12	4.00	5	2	12	4.00	46	0	4	0.61	152
30	11	13	8	7.33	4	1	12	6.83	6	2	6	6.83	8	1	12	7.83	4	1	12	7.83	4	2	12	4.00	5	2	12	4.00	46	0	4	0.78	149
40	14	15	8	7.33	4	1	12	6.83	6	2	6	6.83	8	1	12	7.83	4	1	12	7.83	4	2	12	4.00	5	2	12	4.00	46	0	4	0.90	149
50	16	17	8	7.33	4	1	12	6.83	6	2	6	6.83	8	1	12	7.83	4	1	12	7.83	4	2	12	4.00	5	2	12	4.00	46	0	4	1.00	149
60	17	18	9	7.50	4	1	12	7.00	7	2	6	7.00	6	2	6	8.00	4	1	12	8.00	4	2	12	4.00	5	2	12	4.00	46	0	4	1.09	160

1 @ 6 x 5 REINFORCED CONCRETE BOX BRIDGE

Maximum Fill Height ft.	Dimensions ST in.	SB in.	WT in.	BW ft.	Bars TST Size	No.	Spacing in.	Length ft.	Bars TSB Size	No.	Spacing in.	Length ft.	Bars BST Size	No.	Spacing in.	Length ft.	Bars BSB Size	No.	Spacing in.	Length ft.	Bars EWE Size	No.	Spacing in.	Length ft.	Bars EWI Size	No.	Spacing in.	Length ft.	Bars LNT No.	Bars LND No.	Bars WS No.	Concrete CY/LF	Reinf. Steel LB/LF
No Fill	8.5	8	8	7.33	4	1	12	6.83	6	2	6	6.83	7	1	12	7.83	4	1	12	7.83	4	2	12	5.00	5	2	12	5.00	44	12	4	0.65	154
3	10	10	8	7.33	4	1	12	6.83	6	2	6	6.83	7	1	12	7.83	4	1	12	7.83	4	2	12	5.00	5	2	12	5.00	44	12	4	0.73	154
5	8	8	8	7.33	4	1	12	6.83	5	2	6	6.83	6	2	6	7.83	4	1	12	7.83	4	2	12	5.00	5	2	12	5.00	50	0	4	0.63	151
10	8	8	8	7.33	4	1	12	6.83	5	2	6	6.83	7	1	12	7.83	4	1	12	7.83	4	2	12	5.00	5	2	12	5.00	50	0	4	0.63	144
20	8	10	8	7.33	4	1	12	6.83	6	2	6	6.83	8	1	12	7.83	4	1	12	7.83	4	2	12	5.00	5	2	12	5.00	50	0	4	0.69	155
30	11	13	8	7.33	4	1	12	6.83	6	2	6	6.83	8	1	12	7.83	4	1	12	7.83	5	2	12	5.00	5	2	12	5.00	50	0	4	0.83	159
40	14	15	9	7.50	4	1	12	7.00	6	2	6	7.00	8	1	12	8.00	4	1	12	8.00	5	2	12	5.00	5	2	12	5.00	50	0	4	1.00	160
50	16	17	10	7.67	4	1	12	7.17	6	2	6	7.17	8	1	12	8.17	4	1	12	8.17	4	2	12	5.00	5	2	12	5.00	50	0	4	1.14	157
60	17	18	10	7.67	4	1	12	7.17	7	2	6	7.17	6	2	6	8.17	4	1	12	8.17	5	2	12	5.00	6	2	12	5.00	50	0	4	1.19	176

1 @ 6 x 6 REINFORCED CONCRETE BOX BRIDGE

Maximum Fill Height ft.	Dimensions ST in.	SB in.	WT in.	BW ft.	Bars TST Size	No.	Spacing in.	Length ft.	Bars TSB Size	No.	Spacing in.	Length ft.	Bars BST Size	No.	Spacing in.	Length ft.	Bars BSB Size	No.	Spacing in.	Length ft.	Bars EWE Size	No.	Spacing in.	Length ft.	Bars EWI Size	No.	Spacing in.	Length ft.	Bars LNT No.	Bars LND No.	Bars WS No.	Concrete CY/LF	Reinf. Steel LB/LF
No Fill	8.5	8	8	7.33	4	1	12	6.83	6	2	6	6.83	7	1	12	7.83	4	1	12	7.83	4	2	12	6.00	5	2	12	6.00	48	12	4	0.69	160
3	10	10	8	7.33	4	1	12	6.83	6	2	6	6.83	7	1	12	7.83	4	1	12	7.83	4	2	12	6.00	5	2	12	6.00	48	12	4	0.78	160
5	8	8	8	7.33	4	1	12	6.83	5	2	6	6.83	6	2	12	7.83	4	1	12	7.83	4	2	12	6.00	5	2	12	6.00	58	0	4	0.68	160
10	8	8	8	7.33	4	1	12	6.83	5	2	6	6.83	7	1	12	7.83	4	1	12	7.83	4	2	12	6.00	6	2	12	6.00	58	0	4	0.68	158
20	8	10	8	7.33	4	1	12	6.83	6	2	6	6.83	8	1	12	7.83	4	1	12	7.83	4	2	12	6.00	5	4	6	6.00	58	0	4	0.73	176
30	11	13	9	7.50	4	1	12	7.00	6	2	6	7.00	8	1	12	8.00	4	1	12	8.00	4	2	12	6.00	5	4	6	6.00	58	0	4	0.93	178
40	14	15	10	7.67	4	1	12	7.17	6	2	6	7.17	8	1	12	8.17	4	1	12	8.17	4	2	12	6.00	5	4	6	6.00	58	0	4	1.10	179
50	16	17	11	7.83	4	1	12	7.33	6	2	6	7.33	8	1	12	8.33	4	1	12	8.33	4	2	12	6.00	5	4	6	6.00	58	0	4	1.26	180
60	17	18	12	8.00	4	1	12	7.50	7	2	6	7.50	6	2	6	8.50	4	1	12	8.50	4	2	12	6.00	6	2	12	6.00	58	0	4	1.36	185

Note: Maximum fill height shown in the table is measured from the bottom of the top slab. To obtain the total fill height from the flow line, add the height of the box.
Note: When height of fill above the top slab is less than 1 foot, the top mat of reinforcing in the top slab shall be constructed with 2-1/2 inches of concrete cover.

The following bar information applies to all fill cases in the tables above:
Bars LNT Size = 4 Spacing = 12 in.
Bars LND Size = 4 Spacing = 6 in.
Bars WS Size = 8 Length = 5.00 ft. Spacing = 12 in.

CONST. NO.

PROJECT NO.	YEAR	SHEET NO.
	2010	

REVISIONS

NO.	DATE	BY	BRIEF DESCRIPTION

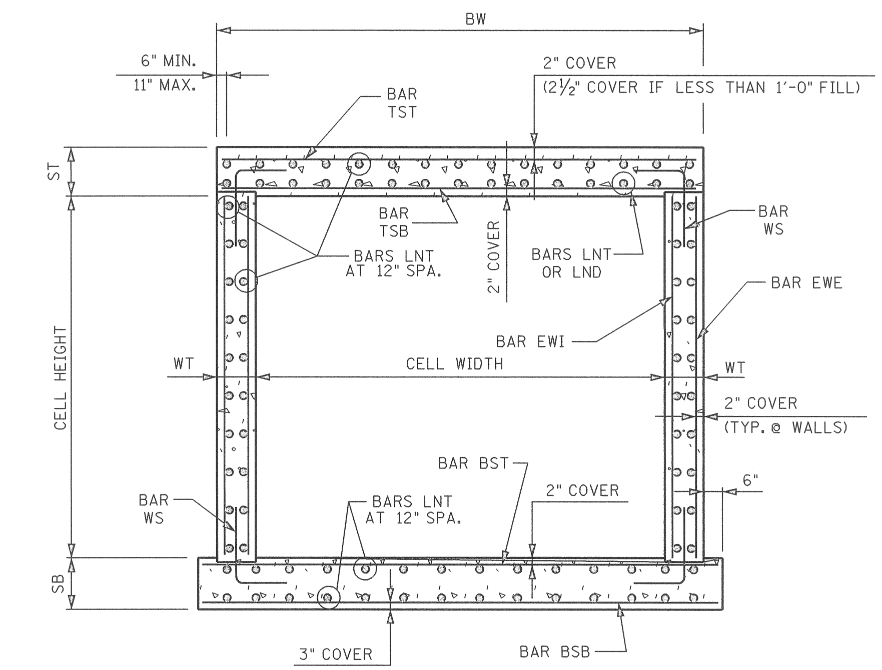

TYPICAL SECTION

NOTE: FOR DESCRIPTIONS OF BOX DIMENSIONS AND REINFORCING BAR DESIGNATIONS SEE STANDARD DRAWING NO. STD-17-5.

STATE OF TENNESSEE
DEPARTMENT OF TRANSPORTATION
STANDARD REINFORCED CONCRETE BOX BRIDGE
INTERIOR SECTION
SPANS: 1 BARREL AT 6'-0"
CLEAR HEIGHTS 3'-0" THRU 6'-0"
0' THRU 60' FILL
2010

CORRECT Edward P. Wasserman
ENGINEER OF STRUCTURES

DESIGNED BY RLL/ALP DATE 12-09
DRAWN BY KEVIN MARTINKO DATE 1-10
SUPERVISED BY EPW/RLC DATE 12-09
CHECKED BY RLL/ALP DATE 2-10

D:\d_drive\stdboxes\tables\1-6-10\Official Culvert Files 1-6-10\6' Span\STD-17-51_1barrel_box6'.dgn 28-JUL-2010 14:25

STD-17-51