PUBLIC NOTICE

Nissan North America, Inc. has applied to the Tennessee Air Pollution Control Division (TAPCD) for a significant modification of their major source operating permit subject to the provisions of paragraph 1200-03-09-.02(11) of the Tennessee Air Pollution Control Regulations (also frequently referred to as Title V regulations). A major source (Title V) operating permit is required by both the Federal Clean Air Act and the Tennessee Air Pollution Control Regulations.

The applicant is Nissan North America, Inc. with a site address of 983 Nissan Drive, Smyrna, TN 37167. They seek to obtain a significant modification to their major source operating permit. The modification includes changes to Paint Line 2 Primer Coating Line where three annual Volatile Organic Compound (VOC) limits are being combined into one annual VOC limit. The modification also includes the addition of a new emergency fire pump engine and an emergency engine with a generator. It should be noted that this facility has a current major source operating permit.

EPA has agreed to treat this draft Part 70 permit modification as a proposed Part 70 permit modification and to perform its 45-day review provided by the law concurrently with the public notice period. If any substantive comments are received, EPA's 45-day review period will cease to be performed concurrently with the public notice period. EPA's 45-day review period will start once the public notice period has been completed and EPA receives notification from the Tennessee Air Pollution Control Division that comments have been received and resolved. Whether EPA's 45-day review period is performed concurrently with the public comment period or after the public comment period has ended, the deadline for citizen's petitions to the EPA Administrator will be determined as if EPA's 45-day review period is performed after the public comment period has ended (i.e., sequentially).

The status regarding EPA's 45-day review of this project and the deadline for submitting a citizen petition can be found at the following website address:

http://www2.epa.gov/caa-permitting/tennessee-proposed-title-v-permits

A copy of the application materials used by the TAPCD and a copy of the draft permit are available for public inspection during normal business hours at the following locations:

Smyrna Public Library
400 Enon Springs West
Smyrna, TN 37167

and

Tennessee Department of Environment and Conservation
Division of Air Pollution Control
William R. Snodgrass Tennessee Tower
312 Rosa L. Parks Avenue, 15th Floor
Nashville, TN 37243

Also, if you require a copy of the draft permit it is available electronically by accessing the TDEC internet site located at:
http://tn.gov/environment/topic/ppo-air

Interested parties are invited to review these materials and comment. In addition, a public hearing may be requested at which written or oral presentations may be made. To be considered, written comments or requests for a public hearing must be made within thirty (30) days of the date of this notice and should be addressed to Ms. Michelle W. Owenby, Director, Air Pollution Control Division, William R. Snodgrass Tennessee Tower, 312 Rosa L. Parks Avenue, 15th Floor, Nashville, Tennessee 37243. Questions concerning the sources may be addressed to Mark Reynolds at the same address or by calling (615)-532-0559. A final determination will be made after weighing all relevant comments.

Individuals with disabilities who wish to participate in these proceedings (or to review these filings) should contact the Tennessee Department of Environment and Conservation to discuss any auxiliary aids or services needed to facilitate such participation. Such contact may be in person, by writing, telephone, or other means, and should be made no less than ten days prior to the end of the public comment period to allow time to provide such aid or services. Contact the Tennessee Department of Environment and Conservation ADA Coordinator, William R. Snodgrass Tennessee Tower, 312 Rosa L. Parks Avenue, 2nd Floor, Nashville, TN 37243, 1-866-253-5827. Hearing impaired callers may use the Tennessee Relay Service, 1-(800)-848-0298.

TITLE V PERMIT STATEMENT

Facility Name:	**Nissan North America, Inc.**
City:	**Smyrna**
County:	**Rutherford**

Date Application Received:	**February 6, 2014**
Date Application Deemed Complete:	**February 6, 2014**

Emission Source Reference No.:	**75-0155**
Permit No.:	**568333**

INTRODUCTION

This narrative is being provided to assist the reader in understanding the content of the attached Title V operating permit. This Title V Permit Statement is written pursuant to Tennessee Air Pollution Control Rule 1200-03-09-.02(11)(f)1.(v). The primary purpose of the Title V operating permit is to consolidate and identify existing state and federal air requirements applicable to **Nissan North America, Inc.** and to provide practical methods for determining compliance with these requirements. The following narrative is designed to accompany the Title V Operating Permit. It initially describes the facility receiving the permit, then the applicable requirements and their significance, and finally the compliance status with those applicable requirements. This narrative is intended only as an adjunct for the reviewer and has no legal standing. Any revisions made to the permit in response to comments received during the public participation process will be described in an addendum to this narrative.

Acronyms:

PSD	Prevention of Significant Deterioration
NESHAP	National Emission Standards for Hazardous Air Pollutants
NSPS	New Source Performance Standards
MACT	Maximum Achievable Control Technology
NSR	New Source Review
TPY	Tons Per Year
PM	Particulate Matter
SO_2	Sulfur Dioxide
NO_x	Nitrogen Oxides
CO	Carbon Monoxide
VOC	Volatile Organic Compound
HAP	Hazardous Air Pollutant

I. Identification Information.

A. Source Description.

1. Nissan North America, Inc. is an automobile and light duty truck manufacturing facility. A complete list of the sources at the facility is in Section V of this document.

B. Facility Classification.

1. Attainment or Non-Attainment Area Location. Area ***is*** designated as an attainment area for all criteria pollutants.

2. Company ***is*** located in a ***Class II area*** (generally speaking, this means that the facility is not located within a national park or national wilderness area; see 40 CFR 52.21(e) for complete definition).

C. Regulatory Status.

1. PSD/NSR. This facility ***is*** a major source under PSD.

2. Title V Major Source Status by Pollutant.

Pollutant	Is the pollutant emitted?	If emitted, what is the facility's status?	
		Major Source Status	Non-Major Source Status
PM	**YES**	**YES**	
PM_{10}	**YES**	**YES**	
SO_2	**YES**	**YES**	
VOC	**YES**	**YES**	
NO_X	**YES**	**YES**	
CO	**YES**	**YES**	
Individual HAP	**YES**	**YES**	
Total HAPs	**YES**	**YES**	
GHG	**YES**	**YES**	

3. MACT Standards. This facility ***is*** a major source for HAPs. This facility ***is*** subject to a final NESHAP.

40 CFR 63, Subpart IIII, NESHAP: Surface Coating of Automobiles and Light-Duty Trucks
40 CFR 63, Subpart EEEE, NESHAP: Organic Liquids Distribution (Non-Gasoline)
40 CFR 63, Subpart PPPP, NESHAP: Surface Coating of Plastic Parts and Products
40 CFR 63, Subpart MMMM, NESHAP: Surface Coating of Miscellaneous Metal Parts and Products
40 CFR 63, Subpart ZZZZ, Reciprocating Internal Combustion Engines

4. Program Applicability. Are the following programs applicable to the facility?

PSD **(*yes*, facility has undergone PSD review*)***
NESHAP ***(yes)***
NSPS ***(yes)***

II. Compliance Information.

A. Compliance Status. Is the facility currently in compliance with all applicable requirements? **(*yes*)**
Are there any applicable requirements that will become effective during the permit term? **(*no*)**

III. Other Requirements.

A. Emissions Trading. The facility is not involved in an emission trading program.

B. Acid Rain Requirements. This facility is not subject to any requirements in Title IV of the Clean Air Act.

C. Prevention of Accidental Releases. This facility is not subject to TAPCR 1200-3-32.

IV. Public Participation Procedures.

A. Notification of this draft permit was mailed to the following environmental agencies:

1. U.S. EPA Region 4
2. Kentucky Department for Environmental Protection
3. Nashville/Davison Co. Metropolitan Health Dept.

V. Emission sources

Emission sources are listed in the order they appear in the Title V permit.

75-0155-90	Paint Line 1 Frame and Body Pretreatment Lines
75-0155-07	Paint Line 1 Frame E-Coat Line
75-0155-89	Paint Line 2 Pretreatment Line
75-0155-71	Paint Line 2 Body E-Coat Line
75-0155-68	Paint Line 2 Stoneguard and Cavity Wax Coating Line
75-0155-66	Paint Line 2 Primer Coating Line
75-0155-64	Paint Line 2 Topcoat Lines and Touch Up Operations
75-0155-70	Paint Line 2 Cavity Wax Booth
75-0155-25	Paint Line 2 Undercoat Booth
75-0155-53	Fascia Paint Line 1
75-0155-62	Fascia Paint Line 2
75-0155-51	Paint Line 1
75-0155-72	Service Parts E-Coat Line
75-0155-33	Battery Assembly Electrolyte Filling and Degassing
75-0155-37	Two RICE for Battery Assembly Plant
75-0155-39	Battery Assembly Sealers and Adhesives
75-0155-56	Natural Gas Fuel Burning for Battery Plant
75-0155-55	Two Emergency RICE for Battery Plant
75-0155-22	Miscellaneous Solvent Usage
75-0155-78	Miscellaneous Sealers and Adhesives Usage
75-0155-01	Three Natural Gas-fired Boilers
75-0155-65	Natural Gas Fuel Burning
75-0155-61	Paint Strip House
75-0155-95	Frame Welding Process
75-0155-26	WWL Preparation Platforms and Spray Booths with Ovens
75-0155-83	Gasoline Dispensing
75-0155-97	Shot Blasting Operation
75-0155-54	Shot Blaster for Paint Line 1
75-0155-80	Windshield Wiper Fluid Operation
75-0155-52	Natural Gas Fuel Burning Sources
75-0155-28	Emergency RICE for Paint Line 1
75-0155-57	Emergency RICE
75-0155-103	Emergency RICE with Fire Pump for Integrated Logistics Center
75-0155-99	Emergency RICE with Generator for Integrated Logistics Center

V. Title V Permit (Initial) History

A. The initial Title V Permit (#548516) issued on August 17, 2009

B. Administrative Permit Amendment #1 was issued February 4, 2011. In a letter dated December 17, 2009, Nissan North America, Inc. requested an administrative permit amendment for the following change:
   (1) Pressure drop limit added to Condition E61-2.
   (2) Incinerator destruction efficiency test information added to Condition E32-10.

C. Minor Permit Modification #1 was issued June 21, 2011. In a letter/application dated March 15, 2011, Nissan North America, Inc. requested a minor permit modification for the following changes:
   (1) Removal of Dynamometer Test Cells (75-0155-98) from permit
   (2) Addition of 14 natural gas burning units to Natural Gas Fuel Burning Source (75-0155-65)

D. Significant Modification #1 was issued January 3, 2013. In a letters/applications dated February 15, 2012, and June 8, 2012, Nissan North America, Inc. requested a significant modification for the following changes:
   (1) Modification of System 4 Body and System 1 Frame Pretreatment Lines (75-0155-90)
   (2) Addition of System 4 Paint Plant (75-0155-51)
   (3) Modification of Service Parts E-Coat Line, including Battery Cases (75-0155-72)
   (4) Addition of Battery Assembly Electrolyte Filling and Degassing (75-0155-33)
   (5) Addition of Two Diesel-Fired Emergency Reciprocating Internal Combustion Engines for Battery Assembly Plant (75-0155-37)
   (6) Addition of Battery Assembly Sealers and Adhesives (75-0155-39)
   (7) Modification of Miscellaneous Solvent Usage (75-0155-22)
   (8) Modification of Natural Gas Fuel Burning (75-0155-65)
   (9) Addition of Natural Gas Fuel Burning Sources (75-0155-52)
   (10) Addition of Emergency RICE for System 4 (75-0155-28)
   (11) Addition of Emergency RICE (75-0155-57), this request was withdrawn in a letter dated October 5, 2012, from Nissan
   (12) Removal of Source #75-0155-02, 75-0155-05, 75-0155-06, 75-0155-13, 75-0155-15, and 75-0155-94.
   (13) Modification of System 3 Plastics Plant Coating Lines (75-0155-62). Nissan has two plastic coating lines designated as Source No. 75-0155-62. In their application, Nissan requested a change to condition E32-3. Nissan requested the removal of the daily VOC limits for each type of coating, but the daily VOC limit for total coatings would be retained. Nissan no longer uses straight shades and would like more flexibility in the coatings they use. The total daily VOC emissions would not increase. These daily VOC limits were set as part of a LAER determination in 1988 and 1989. At that time, all counties within Tennessee were being addressed as if they were in non-attainment status. The limits in condition E32-1, E32-2, E32-4, E32-7, and E32-9 were also part of the LAER determination. These conditions contain a yearly VOC limit (in condition E32-2), a limit on VOC per gallon of solids (in condition E32-4), spray technology requirement (in condition E32-7), and the use of incinerator control (in condition E32-9).

E. Administrative Permit Amendment #2 was issued October 24, 2012. In a letter dated October 3, 2012, Nissan North America, Inc. requested an administrative permit amendment for the following change:
   (1) Incinerator destruction efficiency test information added to Condition E25-7.

F. Minor Permit Modification #2 was issued April 30, 2013. In a letter/application dated January 31, 2013, Nissan North America, Inc. requested a minor permit modification for the following change:
   (1) Addition of 15 existing emergency RICE (75-0155-57)

G. Significant Modification #2 was issued October 23, 2013. In a letter/application dated March 7, 2013, Nissan North America, Inc. requested a significant modification for the following change:
   (1) Addition of three boilers (75-0155-01)

H. Administrative Permit Amendment #3 (issued December 2, 2013). In a letter dated May 3, 2013, Nissan North America, Inc. requested an administrative permit amendment for the following change:
   (1) Add RTO capture efficiency, destruction efficiency, and minimum temperature to Conditions E43-1 and E43-5.
   (2) Add average static pressure values to Condition E43-5.

I. Significant Modification #3 was combined with Title V renewal. In a letter/application dated August 30, 2013, Nissan North America, Inc. requested a significant modification for the following changes:
   (1) Add System 5 Plastic Parts Coating Plant (75-0155-53)
   (2) Add System 4 Shot Blaster (75-0155-54)
   (3) Add Battery Assembly Emergency Generators (75-0155-55)
   (4) Modify Natural Gas Burning source (75-0155-52)
   (5) Modify Miscellaneous Solvents source (75-0155-22)

J. Administrative Permit Amendment #4 was combined with Title V renewal. In a letter dated November 25, 2013, Nissan North America, Inc. requested an administrative permit amendment for the following change:
   (1) Add pressure drop limit for shot blaster (75-0155-54).

K. Minor Permit Modification #3 was combined with Title V renewal. In a letter dated December 20, 2013, Nissan North America, Inc. requested a minor permit modification for the following change:
   (1) Revise Condition E43-1 to include new emission factors for electrolyte filling and degassing.

VI. Title V Permit (Renewal) History

A. The Title V Permit (#568333) renewal issued on April 14, 2015

B. Administrative Permit Amendment #1 (issued May 18, 2015). In a letter dated April 29, 2015, Nissan requested an administrative amendment for the following change:
   (1) Add new testing results to Condition E43-1 for Source 75-0155-33 (Electrolyte Filling and Degassing). Condition E2, E43-1, and E43-2 were modified.

B. Minor Permit Modification #1 (issued July 27, 2015). In an application dated April 27, 2015, Nissan requested a minor modification for the following change:
   (1) Add Stage II variance (for WWL) to source 75-0155-83 (Gasoline Dispensing). Condition E67-2 was modified.

C. Minor Permit Modification #2 (issued December 28, 2015). In applications dated September 11, 2015, and October 24, 2015, Nissan requested a minor modification for the following changes:
   (1) Combine stoneguard and cavity wax annual VOC limits into a single annual VOC limit for Source 75-0155-68. Condition E23-1 was modified.
   (2) List the new transfer efficiencies for Sources 75-0155-64 and 75-0155-66. Conditions E24-8 and E25-7 were modified.

C. Significant Modification #1 (issued January 13, 2016). In an application dated April 24, 2015, Nissan requested a significant modification for the following changes:
   (1) Remove annual PM limits for Sources 75-0155-64 and 75-0155-66. These annual PM limits were not PSD limits. The hourly PM limits remain on the permit. Conditions E24-1 and E25-1 were modified.

D. Minor Permit Modification #3 (issued April 11, 2016). In an application dated December 11, 2015, Nissan requested a minor modification for the following change:
   (1) Add Stage II variance (for ORVR) to source 75-0155-83 (Gasoline Dispensing). Condition E67-2 was modified.

E. Minor Permit Modification #4 (issued July 15, 2016). In an application dated March 5, 2016, Nissan requested a minor modification for the following changes:
   (1) Modify Conditions E35-6 and E35-11 to match the requirements in Chapter 18-.11.
   (2) Conditions B5, E2, and A12 were also modified to conform with the most recent approved standard permit language.
   (3) Condition E3-1, which requires HAP reporting, was deleted.
   (4) Conditions E35-3, E35-4, E35-5, E46-4, E46-5, E46-6, E46-7, E46-8, and E47-8 were modified to correct typographical errors in the compliance methods where conditions were referenced.
   (5) Conditions E44-19, E44-20, E47-19, E47-20, E73-12, E73-13, E75-19, and E75-20 were modified because there was a partial vacatur of the RICE NESHAP and NSPS rules related to demand response.

F. Significant Modification #2.

(A) In an application dated June 16, 2016, Nissan requested a significant modification for the following change:

(1) Nissan requested that three annual VOC limits be combined into a single annual VOC limit that are currently in Title V Permit #568333 in Condition E24-2. Specifically, the three annual VOC limits are: 223.1 TPY for primer, 23.3 TPY for chip primer, and 11.8 TPY for blackout. The new annual VOC limit is simply the sum (258.2 TPY) of these three limits. These limits were originally set in construction permits issued on May 11, 1989. A total of 18 permits were issued on May 11, 1989, as part of the expansion of the facility that added the System 2 paint plant. As part of the modification, Nissan underwent PSD review for NOx and Non-attainment NSR review for VOC. The Preconstruction Review and Final Determination document did not specify that the annual VOC limits were LAER limits. The VOC content limits are the LAER limits.

(B) In an application dated June 16, 2016, Nissan requested a minor modification for the following change:

(1) Addition of an emergency RICE fire pump (75-0155-103). Conditions E76-1 through E76-17 were added to the permit. Although submitted as a minor modification, this change was combined with the significant modificaiton since the applications were submitted at the same time.

(C) In an application dated July 14, 2016, Nissan requested a minor modification for the following change:

(1) Addition of an emergency RICE with generator (75-0155-99). Conditions E77-1 through E77-17 were added to the permit. Although submitted as a minor modification, this change was combined with the significant modificaiton since the applications were submitted around the same time.

(D) The following changes were also made to the permit:

(1) Conditions E44-22, E47-22, E73-16, and E75-22 were added to the permit. These conditions require a report from emergency RICE when they are used for nonemergency reasons.

(2) Conditions E1 and E2 were updated.

TENNESSEE AIR POLLUTION CONTROL BOARD
DEPARTMENT OF ENVIRONMENT AND CONSERVATION
NASHVILLE, TENNESSEE 37243-1531

SIGNIFICANT MODIFICATION #2
OPERATING PERMIT (TITLE V) Issued Pursuant to Tennessee Air Quality Act

This permit fulfills the requirements of Title V of the Federal Clean Air Act (42 U.S.C. 7661a-7661e) and the Federal regulations promulgated thereunder at 40 CFR Part 70 (FR Vol. 57, No. 140, Tuesday, July 21, 1992, p.32295-32312). This permit is issued in accordance with the provisions of paragraph 1200-03-09-.02(11) of the Tennessee Air Pollution Control Regulations (TAPCR). The permittee has been granted permission to operate an air contaminant source in accordance with emissions limitations and monitoring requirements set forth herein.

Date Issued: April 14, 2015
Date of Significant Modification #2: DRAFT
Date Expires: April 13, 2020

Permit Number: 568333

Issued To:
Nissan North America, Inc.

Installation Address:
983 Nissan Drive
Smyrna

Installation Description:
Automotive Manufacturing Facility
Listing of Sources in Table of Contents-Section E

Emission Source Reference No.
75-0155

Emission Source Reference No.: 75-0155
Renewal Application Due Date:
Between July 17, 2019 and October 15, 2019

Primary SIC: 37

Information Relied Upon:
Title V Renewal Application dated February 6, 2014, and amendment dated February 13, 2015.
Administrative Amendment #1 letter dated April 29, 2015.
Minor Modification #1 application dated April 27, 2015.
Minor Modification #2 applications dated September 11, 2015 and October 24, 2015.
Significant Modification #1 application dated April 24, 2015.
Minor Modification #3 application dated December 11, 2015.
Minor Modification #4 application dated March 5, 2016.
Significant Modification #2 applications dated June 16, 2016 and July 14, 2016

(continued on the next page)

_____
TECHNICAL SECRETARY

No Authority is Granted by this Permit to Operate, Construct, or Maintain any Installation in Violation of any Law, Statute, Code, Ordinance, Rule, or Regulation of the State of Tennessee or any of its Political Subdivisions.

POST AT INSTALLATION ADDRESS

CONTENTS

SECTION A

GENERAL PERMIT CONDITIONS

A1.	**Definitions**	**1**
A2.	**Compliance requirement**	**1**
A3.	**Need to halt or reduce activity**	**1**
A4.	**The permit**	**1**
A5.	**Property rights**	**1**
A6.	**Submittal of requested information**	**1**
A7.	**Severability clause**	**2**
A8.	**Fee payment**	**2**
A9.	**Permit revision not required**	**3**
A10.	**Inspection and entry**	**3**
A11.	**Permit shield**	**4**
A12.	**Permit renewal and expiration**	**4**
A13.	**Reopening for cause**	**4**
A14.	**Permit transference**	**5**
A15.	**Air pollution alert**	**5**
A16.	**Construction permit required**	**5**
A17.	**Notification of changes**	**5**
A18.	**Schedule of compliance**	**5**
A19.	**Title VI**	**6**
A20.	**112(r)**	**6**

SECTION B

GENERAL CONDITIONS for MONITORING, REPORTING, and ENFORCEMENT

B1.	**Recordkeeping**	**7**
B2.	**Retention of monitoring data**	**7**
B3.	**Reporting**	**7**
B4.	**Certification**	**7**
B5.	**Annual compliance certification**	**7**
B6.	**Submission of compliance certification**	**8**
B7.	**Emergency provisions**	**8**
B8.	**Excess emissions reporting**	**8**
B9.	**Malfunctions, startups and shutdowns - reasonable measures required**	**9**
B10.	**Report required upon the issuance of a notice of violation for excess emissions**	**9**

CONTENTS

SECTION C

PERMIT CHANGES

C1.	**Operational flexibility changes**	**10**
C2.	**Section 502(b)(10) changes**	**10**
C3.	**Administrative amendment**	**10**
C4.	**Minor permit modifications**	**10**
C5.	**Significant permit modifications**	**11**
C6.	**New construction or modifications**	**11**

SECTION D

GENERAL APPLICABLE REQUIREMENTS

D1.	**Visible emissions**	**12**
D2.	**General provisions and applicability for non-process gaseous emissions**	**12**
D3.	**Non-process emission standards**	**12**
D4.	**General provisions and applicability for process gaseous emissions**	**12**
D5.	**Particulate emissions from process emission sources**	**12**
D6.	**Sulfur dioxide emission standards**	**12**
D7.	**Fugitive dust**	**12**
D8.	**Open burning**	**13**
D9.	**Asbestos**	**13**
D10.	**Annual certification of compliance**	**13**

CONTENTS

SECTION E

SOURCE SPECIFIC EMISSION STANDARDS, OPERATING LIMITATIONS, and MONITORING, RECORDKEEPING and REPORTING REQUIREMENTS

E1.	**Fee payment: Allowable emissions basis**	**14**
E2.	**Reporting requirements**	**16**
E3.	**General permit requirements**	**20**
E4.	**NESHAP – 40 CFR 63 Subpart IIII**	**22**
E5.	**NESHAP – 40 CFR 63 Subpart EEEE**	**26**
E11.	**Paint Line 1 Frame and Body Pretreatment Lines (75-0155-90)**	**27**
E12.	**Paint Line 1 Frame E-Coat Line (75-0155-07)**	**28**
E21.	**Paint Line 2 Pretreatment Line (75-0155-89)**	**29**
E22.	**Paint Line 2 Body E-Coat Line (75-0155-71)**	**30**
E23.	**Paint Line 2 Stoneguard and Cavity Wax Coating Line (75-0155-68)**	**32**
E24.	**Paint Line 2 Primer Coating Line (75-0155-66)**	**33**
E25.	**Paint Line 2 Topcoat Lines and Touch Up Operations (75-0155-64)**	**36**
E26.	**Paint Line 2 Cavity Wax Booth (75-0155-70)**	**39**
E27.	**Paint Line 2 Undercoat Booth (75-0155-25)**	**40**
E31.	**Fascia Paint Line 1 (75-0155-53)**	**41**
E32.	**Fascia Paint Line 2 (75-0155-62)**	**43**
E35.	**Paint Line 1 (75-0155-51)**	**46**
E41.	**Service Parts E-Coat Line (75-0155-72)**	**51**
E43.	**Battery Assembly Electrolyte Filling and Degassing (75-0155-33)**	**53**
E44.	**Two RICE for Battery Assembly Plant (75-0155-37)**	**56**
E45.	**Battery Assembly Sealers and Adhesives (75-0155-39)**	**61**
E46.	**Natural Gas Fuel Burning for Battery Plant (75-0155-56)**	**62**
E47.	**Two Emergency RICE for Battery Plant (75-0155-55)**	**66**
E51.	**Miscellaneous Solvent Usage (75-0155-22)**	**71**
E52.	**Miscellaneous Sealers and Adhesives Usage (75-0155-78)**	**72**
E61.	**Three Natural Gas-fired Boilers (75-0155-01)**	**73**
E62.	**Natural Gas Fuel Burning (75-0155-65)**	**76**
E64.	**Paint Strip House (75-0155-61)**	**78**
E65.	**Frame Welding Process (75-0155-95)**	**79**
E66.	**WWL Preparation Platforms and Spray Booths with Ovens (75-0155-26)**	**80**
E67.	**Gasoline Dispensing (75-0155-83)**	**82**
E68.	**Shot Blasting Operation (75-0155-97)**	**84**
E69.	**Shot Blaster for Paint Line 1 (75-0155-54)**	**85**
E70.	**Windshield Wiper Fluid Operation (75-0155-80)**	**86**
E71.	**Natural Gas Fuel Burning Sources (75-0155-52)**	**87**
E73.	**Emergency RICE for Paint Line 1 (75-0155-28)**	**92**
E75.	**Emergency RICE (75-0155-57)**	**96**
E76.	**Emergency RICE with Fire Pump for Integrated Logistics Center (75-0155-103)**	**102**
E77	**Emergency RICE with Generator for Integrated Logistics Center (75-0155-99)**	**106**
END OF PERMIT NUMBER 568333		**109**
ATTACHMENT 1	**Permit Shield**	**3 pages**
ATTACHMENT 2	**Opacity Matrix Decision**	**1 page**
ATTACHMENT 3	**Emissions Log Information**	**11 pages**

SECTION A

GENERAL PERMIT CONDITIONS

A permit issued under the provisions of paragraph 1200-03-09-.02(11) is a permit issued pursuant to the requirements of Title V of the Federal Act and its implementing Federal regulations promulgated at 40 CFR, Part 70.

A1. **Definitions.** Terms not otherwise defined in the permit shall have the meaning assigned to such terms in the referenced regulation.

TAPCR 1200-03

A2. **Compliance requirement.** All terms and conditions in a permit issued pursuant to paragraph 1200-03-09-.02(11) including any provisions designed to limit a source's potential to emit, are enforceable by the Administrator and citizens under the Federal Act. The permittee shall comply with all conditions of its permit. Except for requirements specifically designated herein as not being federally enforceable (State Only), non-compliance with the permit requirements is a violation of the Federal Act and the Tennessee Air Quality Act and is grounds for enforcement action; for a permit termination, revocation and reissuance, or modification; or for denial of a permit renewal application. Non-compliance with permit conditions specifically designated herein as not being federally enforceable (State Only) is a violation of the Tennessee Air Quality Act and may be grounds for these actions.

TAPCR 1200-03-09-.02(11)(e)2(i) and 1200-03-09-.02(11)(e)1(vi)(I)

A3. **Need to halt or reduce activity.** The need to halt or reduce activity is not a defense for noncompliance. It shall not be a defense for a permittee in an enforcement action that it would have been necessary to halt or reduce the permitted activity in order to maintain compliance with the conditions of the permit. However, nothing in this item shall be construed as precluding consideration of a need to halt or reduce activity as a mitigating factor in assessing penalties for noncompliance if the health, safety or environmental impacts of halting or reducing operations would be more serious than the impacts of continuing operations.

TAPCR 1200-03-09-.02(11)(e)1(vi)(II)

A4. **The permit.** The permit may be modified, revoked, reopened, and reissued, or terminated for cause. The filing of a request by the permittee for a permit modification, revocation and reissuance, or termination, or of a notification of planned changes or anticipated noncompliance does not stay any permit condition.

TAPCR 1200-03-09-.02(11)(e)1(vi)(III)

A5. **Property rights.** The permit does not convey any property rights of any sort, or any exclusive privilege.

TAPCR 1200-03-09-.02(11)(e)1(vi)(IV)

A6. **Submittal of requested information.** The permittee shall furnish to the Technical Secretary, within a reasonable time, any information that the Technical Secretary may request in writing to determine whether cause exists for modifying, revoking and reissuing, or termination of the permit or to determine compliance with the permit. Upon request, the permittee shall also furnish to the Technical Secretary copies of records required to be kept by the permit. If the permittee claims that such information is confidential, the Technical Secretary may review that claim and hold the information in protected status until such time that the Board can hear any contested proceedings regarding confidentiality disputes. If the information is desired by EPA, the permittee may mail the information directly to EPA. Any claims of confidentiality for federal purposes will be determined by EPA.

TAPCR 1200-03-09-.02(11)(e)1(vi)(V)

A7. **Severability clause.** The requirements of this permit are severable. A dispute regarding one or more requirements of this permit does not invalidate or otherwise excuse the permittee from their duty to comply with the remaining portion of the permit.

TAPCR 1200-03-09.02(11)(e)1(v)

A8. **Fee payment.**

(a) The permittee shall pay an annual major source emission fee based upon the responsible official's choice of actual emissions or allowable emissions. An emission cap of 4,000 tons per year per regulated pollutant per major source SIC Code shall apply to actual or allowable based emission fees. A major source annual emission fee will not be charged for emissions in excess of the cap (s) or for carbon monoxide.

(b) Major sources who have filed a timely, complete operating permit application in accordance with 1200-03-09-.02(11), shall pay allowable emission based fees until the beginning of the next annual accounting period following receipt of their major source operating permit. At that time, the permittee shall begin paying their annual emission fee based upon their choice of actual or allowable based fees, or mixed actual and allowable based fees as stated under SECTION E of this permit. Once permitted, altering the existing choice shall be accomplished by a written request of the major source, filed in the office of the Technical Secretary at least one hundred eighty days prior to the expiration or reissuance of the major source operating permit.

(c) Major sources must conform to the following requirements with respect to fee payments:

1. If a major source choosing an allowable based annual emission fee wishes to restructure its allowable emissions for the purposes of lowering its annual emission fees, a mutually agreed upon, more restrictive regulatory requirement may be established to minimize the allowable emissions and thus the annual emission fee. The more restrictive requirement must be specified on the permit, and must include the method used to determine compliance with the limitation. The documentation procedure to be followed by the major source must also be included to insure that the limit is not exceeded. Restructuring the allowable emissions is permissible only in the annual accounting periods of eligibility and only, if the written request for restructuring is filed with the Technical Secretary at least 120 days prior to the beginning of the annual accounting period of eligibility. These periods of eligibility occur upon expiration of the initial major source operating permit, renewal of an expired major source operating permit or reissuance of a major source operating permit.

2. Major sources paying on allowable based emission fees will be billed by the Division no later than April 1 prior to the end of the accounting period. The major source annual emission fee is due July 1 following the end of the accounting period.

3. Major sources choosing an actual based annual emission fee shall file an actual emissions analysis with the Technical Secretary which summarizes the actual emissions of all regulated pollutants at the air contaminant sources of their facility. Based upon the actual emissions analysis, the source shall calculate the fee due and submit the payment and the analysis each July 1st following the end of the annual accounting period.

4. Major sources choosing a mixture of allowable and actual based emission fees shall file an actual emissions and allowable emissions analysis with the Technical Secretary which summarizes the actual and allowable emissions of all regulated pollutants at the air contaminant sources of their facility. Based upon the analysis, the source shall calculate the fee due and submit the payment and the analysis each July 1st following the end of the annual accounting period.

The mixed based fee shall be calculated utilizing the 4,000 ton cap specified in subparagraph 1200-03-26-.02(2)(i). In determining the tonnages to be applied toward the regulated pollutant 4,000 ton cap in a mixed based fee, the source shall first calculate the actual emission based fees for a regulated pollutant and apply that tonnage toward the regulated pollutant's cap. The remaining tonnage available in the 4,000 ton category of a regulated pollutant shall be subject to allowable emission based fee calculations for the sources that were not included in the actual emission based fee calculations. Once the 4,000 ton cap has been reached for a regulated pollutant, no additional fee shall be required.

5. Major sources choosing to pay their major source annual emission fee based on actual based emissions or a mixture of allowable and actual based emissions may request an extension of time to file their emissions analysis with the Technical Secretary. The extension may be granted by the Technical Secretary up to ninety (90) days. The request for extension must be postmarked no later than July 1 or the request for extension shall be denied. The request for extension to file must state the reason and give an adequate explanation.

An estimated annual emission fee payment of no less than eighty percent (80%) of the fee due July 1 must accompany the request for extension to avoid penalties and interest on the underpayment of the annual emission fee. A remaining balance due must accompany the emission analysis. If there has been an overpayment, a refund may be requested in writing to the Division or be applied as a credit toward next year's major source annual emission fee. The request for extension of time is not available to major sources choosing to pay their major source annual emission fee based on allowable emissions.

6. Newly constructed major sources or minor existing sources modifying their operations such that they become a major source in the midst of the standard July 1st to June 30th annual accounting period, shall pay allowable based annual emission fees for the fractional remainder of the annual accounting period commencing upon their start-up. At the beginning of the next annual accounting period, the "responsible official" of the source may choose to pay annual emission fees based on actual or allowable emissions or a mixture of the two as provided for in this rule 1200-03-26-.02.

(d) Where more than one (1) allowable emission limit is applicable to a regulated pollutant, the allowable emissions for the regulated pollutants shall not be double counted. Major sources subject to the provisions of paragraph 1200-03-26-.02(9) shall apportion their emissions as follows to ensure that their fees are not double counted.

1. Sources that are subject to federally promulgated hazardous air pollutant standards that can be imposed under Chapter 1200-03-11 or Chapter 1200-03-31 will place such regulated emissions in the specific hazardous air pollutant under regulation. If the pollutant is also in the family of volatile organic compounds or the family of particulates, the pollutant shall not be placed in that respective family category.

2. A miscellaneous category of hazardous air pollutants shall be used for hazardous air pollutants listed at part 1200-03-26-.02(2)(i)12 that do not have an allowable emission standard. A pollutant placed in this category shall not be subject to being placed in any other category such as volatile organic compounds or particulates.

3. Each individual hazardous air pollutant and the miscellaneous category of hazardous air pollutants is subject to the 4,000 ton cap provisions of subparagraph 1200-03-26-.02(2)(i).

4. Major sources that wish to pay annual emission fees for PM_{10} on an allowable emission basis may do so if they have a specific PM_{10} allowable emission standard. If a major source has a total particulate emission standard, but wishes to pay annual emission fees on an actual PM_{10} emission basis, it may do so if the PM_{10} actual emission levels are proven to the satisfaction of the Technical Secretary. The method to demonstrate the actual PM_{10} emission levels must be made as part of the source's major source operating permit in advance in order to exercise this option. The PM_{10} emissions reported under these options shall not be subject to fees under the family of particulate emissions. The 4,000 ton cap provisions of subparagraph 1200-03-26-.02(2)(i) shall also apply to PM_{10} emissions.

TAPCR 1200-03-26-.02 (3) and (9) and 1200-03-09-.02(11)(e)1(vii)

A9. **Permit revision not required.** A permit revision will not be required under any approved economic incentives, marketable permits, emissions trading and other similar programs or process for changes that are provided for in the permit.

TAPCR 1200-03-09-.02(11)(e)1(viii)

A10. **Inspection and entry.** Upon presentation of credentials and other documents as may be required by law, the permittee shall allow the Technical Secretary or his authorized representative to perform the following for the purposes of determining compliance with the permit applicable requirements:

(a) Enter upon, at reasonable times, the permittee's premises where a source is located or emissions-related activity is conducted, or where records must be kept under the conditions of the permit;

(b) Have access to and copy, at reasonable times, any records that must be kept under the conditions of the permit;

(c) Inspect at reasonable times any facilities, equipment (including monitoring and air pollution control equipment), practices, or operations regulated or required under the permit; and

(d) As authorized by the Clean Air Act and Chapter 1200-03-10 of TAPCR, sample or monitor at reasonable times substances or parameters for the purpose of assuring compliance with the permit or applicable requirements.

(e) "Reasonable times" shall be considered to be customary business hours unless reasonable cause exists to suspect noncompliance with the Act, Division 1200-03 or any permit issued pursuant thereto and the Technical Secretary specifically authorizes an inspector to inspect a facility at any other time.

TAPCR 1200-03-09-.02(11)(e)3.(ii)

A11. **Permit shield.**

(a) Compliance with the conditions of this permit shall be deemed compliance with all applicable requirements as of the date of permit issuance, provided that:

1. Such applicable requirements are included and are specifically identified in the permit; or

2. The Technical Secretary, in acting on the permit application or revision, determines in writing that other requirements specifically identified are not applicable to the source, and the permit includes the determination or a concise summary thereof.

(b) Nothing in this permit shall alter or affect the following:

1. The provisions of section 303 of the Federal Act (emergency orders), including the authority of the Administrator under that section. Similarly, the provisions of T.C.A. §68-201-109 (emergency orders) including the authority of the Governor under the section;

2. The liability of an owner or operator of a source for any violation of applicable requirements prior to or at the time of permit issuance;

3. The applicable requirements of the acid rain program, consistent with section 408(a) of the Federal Act; or

4. The ability of EPA to obtain information from a source pursuant to section 114 of the Federal Act.

(c) Permit shield is granted to the permittee.

TAPCR 1200-03-09-.02(11)(e)6

A12(MM4). <u>Permit renewal and expiration.</u>

(a) An application for permit renewal must be submitted at least 180 days, but no more than 270 days prior to the expiration of this permit. Permit expiration terminates the source's right to operate unless a timely and complete renewal application has been submitted.

(b) Provided that the permittee submits a timely and complete application for permit renewal the source will not be considered to be operating without a permit until the Technical Secretary takes final action on the permit application, except as otherwise noted in paragraph 1200-03-09-.02(11).

(c) This permit, its shield provided in Condition A11, and its conditions will be extended and effective after its expiration date provided that the source has submitted a timely, complete renewal application to the Technical Secretary.

TAPCR 1200-03-09-.02(11)(f)3 and 2, 1200-03-09-.02(11)(d)1(i)(III), and 1200-03-09-.02(11)(a)2

A13. <u>Reopening for cause.</u>

(a) A permit shall be reopened and revised prior to the expiration of the permit under any of the circumstances listed below:

1. Additional applicable requirements under the Federal Act become applicable to the sources contained in this permit provided the permit has a remaining term of 3 or more years. Such a reopening shall be completed not later than 18 months after promulgation of the applicable requirement. No such reopening is required if the effective date of the requirement is later than the permit expiration date of this permit, unless the original has been extended pursuant to 1200-03-09-.02(11)(a)2.

2. Additional requirements become applicable to an affected source under the acid rain program.

3. The Technical Secretary or EPA determines that the permit contains a material mistake or that inaccurate statements were made in establishing the emissions standards or other terms or conditions of the permit.

4. The Technical Secretary or EPA determines that the permit must be revised or revoked to assure compliance with the applicable requirements.

(b) Proceedings to reopen and issue a permit shall follow the same proceedings as apply to initial permit issuance and shall affect only those parts of the permit for which cause to reopen exists, and not the entire permit. Such reopening shall be made as expeditiously as practicable.

(c) Reopenings for cause shall not be initiated before a notice of such intent is provided to the permittee by the Technical Secretary at least 30 days in advance of the date that the permit is to be reopened except that the Technical Secretary may provide a shorter time period in the case of an emergency. An emergency shall be established by the criteria of T.C.A. 68-201-109 or other compelling reasons that public welfare is being adversely affected by the operation of a source that is in compliance with its permit requirements.

(d) If the Administrator finds that cause exists to terminate, modify, or revoke and reissue a permit as identified in A13, he is required under federal rules to notify the Technical Secretary and the permittee of such findings in writing. Upon receipt of such notification, the Technical Secretary shall investigate the matter in order to determine if he agrees or disagrees with the Administrator's findings. If he agrees with the Administrator's findings, the Technical Secretary shall conduct the reopening in the following manner:

1. The Technical Secretary shall, within 90 days after receipt of such notification, forward to EPA a proposed determination of termination, modification, or revocation and reissuance, as appropriate. If the Administrator grants additional time to secure permit applications or additional information from the permittee, the Technical Secretary shall have the additional time period added to the standard 90 day time period.

2. EPA will evaluate the Technical Secretary's proposed revisions and respond as to their evaluation.

3. If EPA agrees with the proposed revisions, the Technical Secretary shall proceed with the reopening in the same manner prescribed under Condition A13 (b) and Condition A13 (c).

4. If the Technical Secretary disagrees with either the findings or the Administrator that a permit should be reopened or an objection of the Administrator to a proposed revision to a permit submitted pursuant to Condition A13(d), he shall bring the matter to the Board at its next regularly scheduled meeting for instructions as to how he should proceed. The permittee shall be required to file a written brief expressing their position relative to the Administrator's objection and have a responsible official present at the meeting to answer questions for the Board. If the Board agrees that EPA is wrong in their demand for a permit revision, they shall instruct the Technical Secretary to conform to EPA's demand, but to issue the permit under protest preserving all rights available for litigation against EPA.

TAPCR 1200-03-09-.02(11)(f)6 and 7.

A14. **Permit transference.** An administrative permit amendment allows for a change of ownership or operational control of a source where the Technical Secretary determines that no other change in the permit is necessary, provided that the following requirements are met:

(a) Transfer of ownership permit application is filed consistent with the provisions of 1200-03-09-.03(6), and

(b) written agreement containing a specific date for transfer of permit responsibility, coverage, and liability between the current and new permittee has been submitted to the Technical Secretary.

TAPCR 1200-03-09-.02(11)(f)4(i)(IV) and 1200-03-09-.03(6)

A15. **Air pollution alert.** When the Technical Secretary has declared that an air pollution alert, an air pollution warning, or an air pollution emergency exists, the permittee must follow the requirements for that episode level as outlined in TAPCR 1200-03-09-.03(1) and TAPCR 1200-03-15-.03.

A16. **Construction permit required.** Except as exempted in TAPCR 1200-03-09-.04, or excluded in subparagraph TAPCR 1200-03-02-.01(1)(aa) or subparagraph TAPCR 1200-03-02-.01(1)(cc), this facility shall not begin the construction of a new air contaminant source or the modification of an air contaminant source which may result in the discharge of air contaminants without first having applied for and received from the Technical Secretary a construction permit for the construction or modification of such air contaminant source.

TAPCR 1200-03-09-.01(1)(a)

A17. **Notification of changes.** The permittee shall notify the Technical Secretary 30 days prior to commencement of any of the following changes to an air contaminant source which would not be a modification requiring a construction permit.

(a) change in air pollution control equipment

(b) change in stack height or diameter

(c) change in exit velocity of more than 25 percent or exit temperature of more than 15 percent based on absolute temperature.

TAPCR 1200-03-09-.02(7)

A18. **Schedule of compliance.** The permittee will comply with any applicable requirement that becomes effective during the permit term on a timely basis. If the permittee is not in compliance the permittee must submit a schedule for coming into compliance which must include a schedule of remedial measure(s), including an enforceable set of deadlines for specific actions.

TAPCR 1200-03-09-.02(11)(d)3 and 40 CFR Part 70.5(c)

A19. **Title VI.**

(a) The permittee shall comply with the standards for recycling and emissions reduction pursuant to 40 CFR, Part 82, Subpart F, except as provided for motor vehicle air conditioners (MVACs) in Subpart B:

1. Persons opening appliances for maintenance, service, repair, or disposal must comply with the required practices pursuant to Section 82.156.

2. Equipment used during the maintenance, service, repair, or disposal of appliances must comply with the standards for recycling and recovery equipment pursuant to Section 82.158.

3. Persons performing maintenance, service, repair, or disposal of appliances must be certified by an approved technician certification program pursuant to Section 82.161.

(b) If the permittee performs a service on motor (fleet) vehicles when this service involves ozone depleting substance refrigerant in the motor vehicle air conditioner (MVAC), the permittee is subject to all the applicable requirements as specified in 40 CFR, Part 82, Subpart B, Servicing of Motor Vehicle Air Conditioners.

(c) The permittee shall be allowed to switch from any ozone-depleting substance to any alternative that is listed in the Significant New Alternatives Program(SNAP) promulgated pursuant to 40 CFR, Part 82, Subpart G, Significant New Alternatives Policy Program.

A20. **112 (r).** The permittee shall comply with the requirement to submit to the Administrator or designated State Agency a risk management plan, including a registration that reflects all covered processes, by June 21, 1999, if the permittee's facility is required pursuant to 40 CFR, 68, to submit such a plan.

SECTION B

GENERAL CONDITIONS for MONITORING, REPORTING, and ENFORCEMENT

B1. **Recordkeeping.** Monitoring and related record keeping shall be performed in accordance with the requirements specified in the permit conditions for each individual permit unit. In no case shall reports of any required monitoring and record keeping be submitted less frequently than every six months.

(a) Where applicable, records of required monitoring information include the following:

1. The date, place as defined in the permit, and time of sampling or measurements;
2. The date(s) analyses were performed;
3. The company or entity that performed the analysis;
4. The analytical techniques or methods used;
5. The results of such analyses; and
6. The operating conditions as existing at the time of sampling or measurement.

(b) Digital data accumulation which utilizes valid data compression techniques shall be acceptable for compliance determination as long as such compression does not violate an applicable requirement and its use has been approved in advance by the Technical Secretary.

TAPCR 1200-03-09-.02(11)(e)1(iii)

B2. **Retention of monitoring data.** The permittee shall retain records of all required monitoring data and support information for a period of at least 5 years from the date of the monitoring sample, measurement, report, or application. Support information includes all calibration and maintenance records and all original strip chart recordings for continuous monitoring instrumentation, and copies of all reports required by the permit.

TAPCR 1200-03-09-.02(11)(e)1(iii)(II)II

B3. **Reporting.** Reports of any required monitoring and record keeping shall be submitted to the Technical Secretary in accordance with the frequencies specified in the permit conditions for each individual permit unit. Reports shall be submitted within 60 days of the close of the reporting period unless otherwise noted. All instances of deviations from permit requirements must be clearly identified in such reports. All required reports must be certified by a responsible official. Reports required under "State only requirements" are not required to be certified by a responsible official.

TAPCR 1200-03-09-.02(11)(e)1(iii)

B4. **Certification.** Except for reports required under “State Only” requirements, any application form, report or compliance certification submitted pursuant to the requirements of this permit shall contain certification by a responsible official of truth, accuracy and completeness. This certification shall state that, based on information and belief formed after reasonable inquiry, the statements and information in the document are true, accurate and complete.

TAPCR 1200-03-09-.02(11)(d)4

B5(MM4). **Annual compliance certification.** The permittee shall submit annually compliance certifications with terms and conditions contained in Sections A, B, D and E of this permit, including emission limitations, standards, or work practices. This compliance certification shall include all of the following (provided that the identification of applicable information may cross-reference the permit or previous reports, as applicable):

(a) The identification of each term or condition of the permit that is the basis of the certification;

(b) The identification of the method(s) or other means used by the owner or operator for determining the compliance status with each term and condition during the certification period; such methods and other means shall include, at a minimum, the methods and means required by this permit. If necessary, the owner or operator also shall identify any other material information that must be included in the certification to comply with section 113(c)(2) of the Federal Act, which prohibits knowingly making a false certification or omitting material information;

(c) The status of compliance with the terms and conditions of the permit for the period covered by the certification, including whether compliance during the period was continuous or intermittent. The certification shall be based on the method or means designated in B5(b) above. The certification shall identify each deviation and take it into account in the compliance certification. The certification shall also identify as possible exceptions to compliance any periods during which compliance is required and in which an excursion* or exceedance** as defined below occurred; and

(d) Such other facts as the Technical Secretary may require to determine the compliance status of the source.

* “Excursion” shall mean a departure from an indicator range established for monitoring under this paragraph, consistent with any averaging period specified for averaging the results of the monitoring.

** "Exceedance" shall mean a condition that is detected by monitoring that provides data in terms of an emission limitation or standard and that indicates that emissions (or opacity) are greater than the applicable emission limitation or standard (or less than the applicable standard in the case of a percent reduction requirement) consistent with any averaging period specified for averaging the results of the monitoring.

40 CFR Part 70.6(c)(5)(iii) as amended in the Federal Register Vol. 79, No.144, July 28, 2014, pages 43661 through 43667

B6. **Submission of compliance certification.** The compliance certification shall be submitted to:

The Tennessee Department of Environment and Conservation Environmental Field Office specified in Section E of this permit	and	Air and EPCRA Enforcement Branch US EPA Region IV 61 Forsyth Street, SW Atlanta, Georgia 30303

TAPCR 1200-03-09-.02(11)(e)3(v)(IV)

B7. **Emergency provisions.** An emergency constitutes an affirmative defense to an enforcement action brought against this source for noncompliance with a technology based emission limitation due to unavoidable increases in emissions attributable to the emergency. An emergency shall not include noncompliance to the extent caused by improperly designed equipment, lack of preventative maintenance, careless or improper operation, or operator error.

(a) The affirmative defense of the emergency shall be demonstrated through properly signed, contemporaneous operating logs, or other relevant evidence that:

1. An emergency occurred and that the permittee can identify the probable cause(s) of the emergency. "Probable" must be supported by a credible investigation into the incident that seeks to identify the causes and results in an explanation supported by generally accepted engineering or scientific principles.

2. The permitted source was at the time being properly operated. In determining whether or not a source was being properly operated, the Technical Secretary shall examine the source's written standard operating procedures which were in effect at the time of the noncompliance and any other code as detailed below that would be relevant to preventing the noncompliance. Adherence to the source's standard operating procedures will be the test of adequate preventative maintenance, careless operation, improper operation or operator error to the extent that such adherence would prevent noncompliance. The source's failure to follow recognized standards of practice to the extent that adherence to such a standard would have prevented noncompliance will disqualify the source from any claim of an emergency and an affirmative defense.

3. During the period of the emergency, the permittee took all reasonable steps to minimize levels of emissions that exceeded the emission standards, or other requirements in the permit.

4. The permittee submitted notice of the emergency to the Technical Secretary according to the notification criteria for malfunctions in rule 1200-03-20-.03. For the purposes of this condition, "emergency" shall be substituted for "malfunction(s)" in rule 1200-03-20-.03 to determine the relevant notification threshold. The notice shall include a description of the emergency, any steps taken to mitigate emissions, and corrective actions taken.

(b) In any enforcement proceeding the permittee seeking to establish the occurrence of an emergency has the burden of proof.

(c) The provisions of this condition are in addition to any emergency, malfunction or upset requirement contained in Division 1200-03 or other applicable requirement.

TAPCR 1200-03-09-.02(11)(e)7

B8. **Excess emissions reporting.**

(a) The permittee shall promptly notify the Technical Secretary when any emission source, air pollution control equipment, or related facility breaks down in such a manner to cause the emission of air contaminants in excess of the applicable emission standards contained in Division 1200-03 or any permit issued thereto, or of sufficient duration to cause damage to property or public health. The permittee must provide the Technical Secretary with a statement giving all pertinent facts, including the estimated duration of the breakdown. Violations of the visible emission standard which occur for less than 20 minutes in one day (midnight to midnight) need not be reported. Prompt notification will be within 24 hours of the malfunction and shall be provided by telephone to the Division's Nashville office. The Technical Secretary shall be notified when the condition causing the failure or breakdown has been corrected. In attainment and unclassified areas if emissions other than from sources designated as significantly impacting on a nonattainment area in excess of the standards will not and do not occur over more than a 24-hour period (or will not recur over more than a 24-hour period) and no damage to property and or public health is anticipated, notification is not required.

(b) Any malfunction that creates an imminent hazard to health must be reported by telephone immediately to the Division's Nashville office at (615) 532-0554 and to the State Civil Defense.

(c) A log of all malfunctions, startups, and shutdowns resulting in emissions in excess of the standards in Division 1200-03 or any permit issued thereto must be kept at the plant. All information shall be entered in the log no later than

twenty-four (24) hours after the startup or shutdown is complete, or the malfunction has ceased or has been corrected. Any later discovered corrections can be added in the log as footnotes with the reason given for the change. This log must record at least the following:

1. Stack or emission point involved
2. Time malfunction, startup, or shutdown began and/or when first noticed
3. Type of malfunction and/or reason for shutdown
4. Time startup or shutdown was complete or time the air contaminant source returned to normal operation
5. The company employee making entry on the log must sign, date, and indicate the time of each log entry

The information under items 1. and 2. must be entered into the log by the end of the shift during which the malfunction or startup began. For any source utilizing continuous emission(s) monitoring, continuous emission(s) monitoring collection satisfies the above log keeping requirement.

TAPCR 1200-03-20-.03 and .04

B9. **Malfunctions, startups and shutdowns - reasonable measures required.** The permittee must take all reasonable measures to keep emissions to a minimum during startups, shutdowns, and malfunctions. These measures may include installation and use of alternate control systems, changes in operating methods or procedures, cessation of operation until the process equipment and/or air pollution control equipment is repaired, maintaining sufficient spare parts, use of overtime labor, use of outside consultants and contractors, and other appropriate means. Failures that are caused by poor maintenance, careless operation or any other preventable upset condition or preventable equipment breakdown shall not be considered malfunctions. This provision does not apply to standards found in 40 CFR, Parts 60(Standards of performance for new stationary sources), 61(National emission standards for hazardous air pollutants) and 63(National emission standards for hazardous air pollutants for source categories).

TAPCR 1200-03-20-.02

B10. **Report required upon the issuance of a notice of violation for excess emissions.** The permittee must submit within twenty (20) days after receipt of the notice of violation, the data shown below to assist the Technical Secretary in deciding whether to excuse or validate the violation. If this data has previously been available to the Technical Secretary prior to the issuance of the notice of violation no further action is required of the violating source. However, if the source desires to submit additional information, then this must be submitted within the same twenty (20) day time period. The minimum data requirements are:

(a) The identity of the stack and/or other emission point where the excess emission(s) occurred;
(b) The magnitude of the excess emissions expressed in pounds per hour and the units of the applicable emission limitation and the operating data and calculations used in determining the magnitude of the excess emissions;
(c) The time and duration of the emissions;
(d) The nature and cause of such emissions;
(e) For malfunctions, the steps taken to correct the situation and the action taken or planned to prevent the recurrence of such malfunctions;
(f) The steps taken to limit the excess emissions during the occurrence reported, and
(g) If applicable, documentation that the air pollution control equipment, process equipment, or processes were at all times maintained and operated in a manner consistent with good operating practices for minimizing emissions.

Failure to submit the required report within the twenty (20) day period specified shall preclude the admissibility of the data for consideration of excusal for malfunctions.

TAPCR 1200-03-20-.06(2), (3) and (4)

SECTION C
PERMIT CHANGES

C1. **Operational flexibility changes.** The source may make operational flexibility changes that are not addressed or prohibited by the permit without a permit revision subject to the following requirements:

(a) The change cannot be subject to a requirement of Title IV of the Federal Act or Chapter 1200-03-30.

(b) The change cannot be a modification under any provision of Title I of the federal Act or Division 1200-03.

(c) Each change shall meet all applicable requirements and shall not violate any existing permit term or condition.

(d) The source must provide contemporaneous written notice to the Technical Secretary and EPA of each such change, except for changes that are below the threshold of levels that are specified in Rule 1200-03-09-.04.

(e) Each change shall be described in the notice including the date, any change in emissions, pollutants emitted, and any applicable requirements that would apply as a result of the change.

(f) The change shall not qualify for a permit shield under the provisions of part 1200-03-09-.02(11)(e)6.

(g) The permittee shall keep a record describing the changes made at the source that result in emissions of a regulated air pollutant subject to an applicable requirement, but not otherwise regulated under the permit, and the emissions resulting from those changes. The records shall be retained until the changes are incorporated into subsequently issued permits.

TAPCR 1200-03-09-.02(11)(a)4 (ii)

C2. **Section 502(b)(10) changes.**

(a) The permittee can make certain changes without requiring a permit revision, if the changes are not modifications under Title I of the Federal Act or Division 1200-03 and the changes do not exceed the emissions allowable under the permit. The permittee must, however, provide the Administrator and Technical Secretary with written notification within a minimum of 7 days in advance of the proposed changes. The Technical Secretary may waive the 7 day advance notice in instances where the source demonstrates in writing that an emergency necessitates the change. Emergency shall be demonstrated by the criteria of TAPCR 1200-03-09-.02(11)(e)7 and in no way shall it include changes solely to take advantages of an unforeseen business opportunity. The Technical Secretary and EPA shall attach each such notice to their copy of the relevant permit.

(b) The written notification must be signed by a facility Title V responsible official and include the following:

1. a brief description of the change within the permitted facility;

2. the date on which the change will occur;

3. a declaration and quantification of any change in emissions;

4. a declaration of any permit term or condition that is no longer applicable as a result of the change; and

5. a declaration that the requested change is not a Title I modification and will not exceed allowable emissions under the permit.

(c) The permit shield provisions of TAPCR 1200-03-09-.02(11)(e)6 shall not apply to Section 502(b)(10) changes.

TAPCR 1200-03-09-.02(11)(a)4 (i)

C3. **Administrative amendment.**

(a) Administrative permit amendments to this permit shall be in accordance with 1200-03-09-.02(11)(f)4. The source may implement the changes addressed in the request for an administrative amendment immediately upon submittal of the request.

(b) The permit shield shall be extended as part of an administrative permit amendment revision consistent with the provisions of TAPCR 1200-03-09-.02(11)(e)6 for such revisions made pursuant to item (c) of this condition which meet the relevant requirements of TAPCR 1200-03-09-.02(11)(e), TAPCR 1200-03-09-.02(11)(f) and TAPCR 1200-03-09-.02(11)(g) for significant permit modifications.

(c) Proceedings to review and grant administrative permit amendments shall be limited to only those parts of the permit for which cause to amend exists, and not the entire permit.

TAPCR 1200-03-09-.02(11)(f)4

C4. **Minor permit modifications.**

(a) The permittee may submit an application for a minor permit modification in accordance with TAPCR 1200-03-09-.02(11)(f)5(ii).

(b) The permittee may make the change proposed in its minor permit modification immediately after an application is filed with the Technical Secretary.

(c) Proceedings to review and modify permits shall be limited to only those parts of the permit for which cause to modify exists, and not the entire permit.

(d) Minor permit modifications do not qualify for a permit shield.

TAPCR 1200-03-09-.02(11)(f)5(ii)

C5. **Significant permit modifications.**

(a) The permittee may submit an application for a significant modification in accordance with TAPCR 1200-03-09-.02(11)(f)5(iv).

(b) Proceedings to review and modify permits shall be limited to only those parts of the permit for which cause to modify exists, and not the entire permit.

TAPCR 1200-03-09-.02(11)(f)5(iv)

C6. **New construction or modifications.**

Future construction at this facility that is subject to the provisions of TAPCR 1200-03-09-.01 shall be governed by the following:

(a) The permittee shall designate in their construction permit application the route that they desire to follow for the purposes of incorporating the newly constructed or modified sources into their existing operating permit. The Technical Secretary shall use that information to prepare the operating permit application submittal deadlines in their construction permit.

(b) Sources desiring the permit shield shall choose the administrative amendment route of TAPCR 1200-03-09-.02(11)(f)4 or the significant modification route of TAPCR 1200-03-09-.02(11)(f)5(iv).

(c) Sources desiring expediency instead of the permit shield shall choose the minor permit modification procedure route of TAPCR 1200-03-09-.02(11)(f)5(ii) or group processing of minor modifications under the provisions of TAPCR 1200-03-09-.02(11)(f)5(iii) as applicable to the magnitude of their construction.

TAPCR 1200-03-09-.02(11)(d) 1(i)(V)

SECTION D

GENERAL APPLICABLE REQUIREMENTS

D1. **Visible emissions.** With the exception of air emission sources exempt from the requirements of TAPCR Chapter 1200-03-05 and air emission sources for which a different opacity standard is specifically provided elsewhere in this permit, the permittee shall not cause, suffer, allow or permit discharge of a visible emission from any air contaminant source with an opacity in excess of twenty (20) percent for an aggregate of more than five (5) minutes in any one (1)hour or more than twenty (20) minutes in any twenty-four (24) hour period; provided, however, that for fuel burning installations with fuel burning equipment of input capacity greater than 600 million btu per hour, the permittee shall not cause, suffer, allow, or permit discharge of a visible emission from any fuel burning installation with an opacity in excess of twenty (20) percent (6-minute average) except for one six minute period per one (1) hour of not more than forty (40) percent opacity. Sources constructed or modified after July 7, 1992 shall utilize 6-minute averaging.

Consistent with the requirements of TAPCR Chapter 1200-03-20, due allowance may be made for visible emissions in excess of that permitted under TAPCR 1200-03-05 which are necessary or unavoidable due to routine startup and shutdown conditions. The facility shall maintain a continuous, current log of all excess visible emissions showing the time at which such conditions began and ended and that such record shall be available to the Technical Secretary or his representative upon his request.

TAPCR 1200-03-05-.01(1), TAPCR 1200-03-05-.03(6) and TAPCR 1200-03-05-.02(1)

D2. **General provisions and applicability for non-process gaseous emissions.** Any person constructing or otherwise establishing a non-portable air contaminant source emitting gaseous air contaminants after April 3, 1972, or relocating an air contaminant source more than 1.0 km from the previous position after November 6, 1988, shall install and utilize the best equipment and technology currently available for controlling such gaseous emissions.

TAPCR 1200-03-06-.03(2)

D3. **Non-process emission standards.** The permittee shall not cause, suffer, allow, or permit particulate emissions from non-process sources in excess of the standards in TAPCR 1200-03-06.

D4. **General provisions and applicability for process gaseous emissions.** Any person constructing or otherwise establishing an air contaminant source emitting gaseous air contaminants after April 3, 1972, or relocating an air contaminant source more than 1.0 km from the previous position after November 6, 1988, shall install and utilize equipment and technology which is deemed reasonable and proper by the Technical Secretary.

TAPCR 1200-03-07-.07(2)

D5. **Particulate emissions from process emission sources.** The permittee shall not cause, suffer, allow, or permit particulate emissions from process sources in excess of the standards in TAPCR 1200-03-07.

D6. **Sulfur dioxide emission standards.** The permittee shall not cause, suffer, allow, or permit Sulfur dioxide emissions from process and non-process sources in excess of the standards in TAPCR 1200-03-14. Regardless of the specific emission standard, new process sources shall utilize the best available control technology as deemed appropriate by the Technical Secretary of the Tennessee Air Pollution Control Board.

D7. **Fugitive Dust.**

(a) The permittee shall not cause, suffer, allow, or permit any materials to be handled, transported, or stored; or a building, its appurtenances, or a road to be used, constructed, altered, repaired, or demolished without taking reasonable precautions to prevent particulate matter from becoming airborne. Such reasonable precautions shall include, but not be limited to, the following:

1. Use, where possible, of water or chemicals for control of dust in demolition of existing buildings or structures, construction operations, grading of roads, or the clearing of land;

2. Application of asphalt, oil, water, or suitable chemicals on dirt roads, material stock piles, and other surfaces which can create airborne dusts;

3. Installation and use of hoods, fans, and fabric filters to enclose and vent the handling of dusty materials. Adequate containment methods shall be employed during sandblasting or other similar operations.

(b) The permittee shall not cause, suffer, allow, or permit fugitive dust to be emitted in such manner to exceed five (5) minutes per hour or twenty (20) minutes per day as to produce a visible emission beyond the property line of the property on which the emission originates, excluding malfunction of equipment as provided in Chapter 1200-03-20.

TAPCR 1200-03-08

D8. **Open burning.** The permittee shall comply with the TAPCR 1200-03-04 for all open burning activities at the facility.

TAPCR 1200-03-04

D9. **Asbestos.** Where applicable, the permittee shall comply with the requirements of 1200-03-11-.02(2)(d) when conducting any renovation or demolition activities at the facility.

TAPCR 1200-03-11-.02(2)(d) and 40 CFR, Part 61

D10. **Annual certification of compliance.** The generally applicable requirements set forth in Section D of this permit are intended to apply to activities and sources that are not subject to source-specific applicable requirements contained in State of Tennessee and U.S. EPA regulations. By annual certification of compliance, the permittee shall be considered to meet the monitoring and related record keeping and reporting requirements of TAPCR 1200-03-09-.02(11)(e)1.(iii) and 1200-03-10-.04(2)(b)1 and compliance requirements of TAPCR 1200-03-09-.02(11)(e)3.(i). The permittee shall submit compliance certification for these conditions annually.

SECTION E

SOURCE SPECIFIC EMISSION STANDARDS, OPERATING LIMITATIONS, and MONITORING, RECORDKEEPING and REPORTING REQUIREMENTS

75-0155 **Facility Description:** This facility manufactures automobiles and light-duty trucks.

Conditions **E1** through **E3-11** apply to all sources in Section E of this permit unless otherwise noted.

E1(SM2). **Fee payment: mixed (actual and allowable) emissions basis.**

FEE EMISSIONS SUMMARY TABLE FOR MAJOR SOURCE 75-0155

REGULATED POLLUTANTS	ALLOWABLE EMISSIONS (tons per AAP)	ACTUAL EMISSIONS (tons per AAP)	COMMENTS
PARTICULATE MATTER (PM)	102.39	AEAR	Pay on allowables for all sources except sources 01, 28, 37 52, 55, 56, 57, 65, 99, and 103, which pay on actuals.
PM_{10}	N/A	N/A	N/A
SO_2	N/A	AEAR	Pay on actuals for all sources
VOC	6.1	AEAR	Pay on actuals for all sources except sources 80 and 83, which pay on allowables
NO_X	N/A	AEAR	Pay on actuals for all sources
CATEGORY OF MISCELLANEOUS HAZARDOUS AIR POLLUTANTS (HAP WITHOUT A STANDARD)*			
VOC FAMILY GROUP	N/A	N/A	Fee emissions are included in VOC above.
NON-VOC GASEOUS GROUP	N/A	N/A	N/A
PM FAMILY GROUP	N/A	N/A	Fee emissions are included in PM above.
CATEGORY OF SPECIFIC HAZARDOUS AIR POLLUTANTS (HAP WITH A STANDARD)**			
VOC FAMILY GROUP	N/A	N/A	NESHAP (40 CFR Part 63). Fee emissions are included in VOC above.
NON-VOC GASEOUS GROUP	N/A	N/A	N/A
PM FAMILY GROUP	N/A	N/A	N/A
CATEGORY OF NSPS POLLUTANTS NOT LISTED ABOVE***			
EACH NSPS POLLUTANT NOT LISTED ABOVE	N/A	N/A	

NOTES

AAP The **Annual Accounting Period** (**AAP**) is a twelve (12) consecutive month period that **begins each July 1st and ends June 30th of the following year**. The **present Annual Accounting Period began July 1, 2014 and ends June 30, 2015.** The **next Annual Accounting Period begins July 1, 2015 and ends June 30, 2016.**

N/A **N/A** indicates that no emissions are specified for fee computation.

AEAR **AEAR** indicates that an **A**ctual **E**missions **A**nalysis is **R**equired to determine the actual emissions of:

(1) **each regulated pollutant** (Particulate matter, SO_2, VOC, NO_X and so forth. See TAPCR 1200-03-26-.02(2)(i) for the definition of a regulated pollutant.),

(2) **each pollutant group** (VOC Family, Non-VOC Gaseous, and Particulate Family), and

(3) the **Miscellaneous HAP Category**

under consideration during the **Annual Accounting Period**.

***** **Category Of Miscellaneous HAP (HAP Without A Standard):** This category is made-up of hazardous air pollutants that do not have a federal or state standard. Each HAP is classified into one of three groups, the **VOC**

Family group**, the Non-VOC Gaseous** group**,** or the **Particulate (PM) Family** group**.** **For fee computation**, the **Miscellaneous HAP Category** is subject to the 4,000 ton cap provisions of subparagraph 1200-03-26-.02(2)(i).

** **Category Of Specific HAP (HAP With A Standard):** This category is made-up of hazardous air pollutants (HAP) that are subject to Federally promulgated Hazardous Air Pollutant Standards that can be imposed under Chapter 1200-03-11 or Chapter 1200-03-31. Each individual hazardous air pollutant is classified into one of three groups, the **VOC Family** group**, the Non-VOC Gaseous** group**,** or the **Particulate (PM) Family** group**.** **For fee computation**, each individual hazardous air pollutant of the **Specific HAP Category** is subject to the 4,000 ton cap provisions of subparagraph 1200-03-26-.02(2)(i).

*** **Category Of NSPS Pollutants Not Listed Above:** This category is made-up of each **N**ew **S**ource **P**erformance **S**tandard (**NSPS**) pollutant whose emissions are not included in the **PM**, **SO_2, VOC** or **NO_X** emissions from each source in this permit. **For fee computation**, each **NSPS pollutant not listed above** is subject to the 4,000 ton cap provisions of subparagraph 1200-03-26-.02(2)(i).

END NOTES

The permittee shall:

(1) Pay major source annual **mixture (allowable and actual) based emission fees**, as requested by the responsible official, for the **present Annual Accounting Period** and the **next Annual Accounting Period**.

(2) Prepare an **actual emissions and allowable emissions analysis** beginning July 1, **2014** in accordance with the above **Fee Emissions Summary Table.** The **actual emissions and allowable emissions analysis** shall include:

- **(a)** the completed **Fee Emissions Summary Table**,
- **(b)** each **AEAR** required by the above **Fee Emissions Summary Table, and**
- **(c)** the records, or a summary of the records, required by Conditions **E11-1, E12-5, E21-1, E22-1, E23-1, E24-2, E25-2, E26-3, E27-3, E31-2, E32-2, E35-2, E41-1, E43-1, E44-21, E45-1, E46-15, E47-21, E51-1, E52-1, E61-14, E62-9, E64-2, E66-1, E71-6, E71-15, E73-15, and E75-21, E76-16, and E77-17** of this permit. These records shall be used to complete the **AEARs** required by the above **Fee Emissions Summary Table**.

(3) Submit the **actual emissions and allowable emissions analysis** at the time the fees are paid in full.

(4) Calculate the fee due based upon the **actual emissions and allowable emissions analysis**, and submit the payment on July 1st following the end of the **annual accounting period**. If any part of any fee imposed under TAPCR 1200-03-26-.02 is not paid within fifteen (15) days of the due date, penalties shall at once accrue as specified in TAPCR 1200-03-26-.02(8). Major sources may request an extension of time to file their emissions analysis with the Technical Secretary as specified in Condition A8(c)5 of this permit. Emissions for regulated pollutants shall not be double counted as specified in Condition A8(d) of this permit.

Payment of the fee due shall be submitted to the Division of Fiscal Services at the address below.

Tennessee Department of Environment and Conservation Division of Fiscal Services William R. Snodgrass Tennessee Tower 312 Rosa L. Parks Avenue, 10th Floor Nashville, TN 37243

The actual and allowable emissions analysis shall be submitted to The Technical Secretary at the address below. In lieu of mailing a hard copy of the analysis, the permittee may submit an electronic copy of the analysis to the email address below.

Tennessee Division of Air Pollution Control William R. Snodgrass Tennessee Tower 312 Rosa L. Parks Avenue, 15th Floor Nashville, TN 37243	OR	air.pollution.control@tn.gov

TAPCR 1200-03-26-.02 (3) and (9), and 1200-03-09-.02(11)(e)1 (iii) and (vii)

E2(SM2). **Reporting requirements**.

(a) **Semiannual reports.** The first report since issuance of this permit shall cover the 6-month period from **October 1, 2014,** to **March 31, 2015**, and shall be submitted within 60 days after the 6-month period ending **March 31, 2015**. Subsequent reports shall be submitted within 60 days after the end of each 6-month period following the first report.

Start of Semiannual Report Period	End of Semiannual Report Period	Semiannual Report Due
October 1, 2014	March 31, 2015	May 30, 2015
April 1, 2015	September 30, 2015	November 29, 2015
October 1, 2015	March 31, 2016	May 30, 2016
April 1, 2016	September 30, 2016	November 29, 2016
October 1, 2016	March 31, 2017	May 30, 2017
April 1, 2017	September 30, 2017	November 29, 2017
October 1, 2017	March 31, 2018	May 30, 2018
April 1, 2018	September 30, 2018	November 29, 2018
October 1, 2018	March 31, 2019	May 30, 2019
April 1, 2019	September 30, 2019	November 29, 2019
October 1, 2019	March 31, 2020	May 30, 2020
April 1, 20XX	September 30, 20XX	November 29, 20XX
October 1, 20XX	March 31, 20XX + 1	May 30, 20XX + 1

These semiannual reports shall include:

(1) Any monitoring and recordkeeping required by Conditions **E11-1, E12-2, E12-4, E12-5, E21-1, E22-1, E22-2, E22-5, E23-1, E23-2, E23-3, E24-1(SM1), E24-2, E24-3, E24-4, E24-5, E24-7, E24-10, E25-1(SM1), E25-2, E25-3, E25-6, E25-9, E26-1, E26-2, E26-3, E27-1, E27-2, E27-3, E31-1(SM1), E31-2(SM1), E31-3, E31-5, E32-1, E32-2, E32-3, E32-4, E32-5, E32-8, E32-11, E35-1, E35-2, E35-3(MM4), E35-5(MM4), E35-6(MM4), E35-7, E35-8, E35-9, E35-10, E35-11(MM4), E35-13, E35-16, E41-1, E41-2, E41-5, E43-1(AA1), E43-2(AA1), E44-4, E44-19(MM4), E45-1, E46-3, E47-4, E47-20(MM4), E51-1, E52-1, E61-9, E62-1, E64-1, E64-2, E65-1, E66-1, E66-2, E66-5, E66-6, E68-1, E68-2, E69-1, E69-3, E71-3, E71-6, E73-13(MM4), E76-15(SM2), and E77-16(SM2)** of this permit. However, a summary report of this data is acceptable provided there is sufficient information to enable the Technical Secretary to evaluate compliance.

(2) The visible emission evaluation readings from Conditions **E3-3, E22-7, E23-4, E24-9, E25-8, E26-4, E27-4, E31-4, E32-6, E35-14, E41-7, E62-8, and E69-2** of this permit if required. However, a summary report of this data is acceptable provided there is sufficient information to enable the Technical Secretary to evaluate compliance.

(3) Identification of all instances of deviations from **ALL PERMIT REQUIREMENTS (except Conditions E4-1 through E4-8; E5-1 through E5-3; E44-17; E44-18; E46-10 through E46-14; E47-17; E47-18; E61-10 through E61-13; E71-10 through E71-14; and E75-1 through E75-20, which are reported in the NESHAP semiannual and 5-year reports)**. The word "deviation" (in Condition E2(a)(3)) shall have the meaning as defined in a dictionary; such as, departure or divergence. If no deviations occurred, all instances of no deviation must be identified.

These reports must be certified by a responsible official consistent with condition B4 of this permit and shall be submitted to the Nashville Environmental Field Office at the address below. In lieu of mailing a hard copy of the report, the permittee may submit an electronic copy of the report to both of the email addresses below.

Nashville Environmental Field Office Division of Air Pollution Control 711 R. S. Gass Blvd. Nashville, TN 37216	OR	air.pollution.control@tn.gov and APC.NashEFO@tn.gov

TAPCR 1200-03-09-.02(11)(e)1.(iii), 40 CFR §63.10(d) and 63.3120

E2(SM2). **Reporting requirements**. (continued)

(b) **Annual compliance certification** The permittee shall submit annually compliance certifications with terms and conditions contained in Sections A, B, D and E of this permit, including emission limitations, standards, or work practices. This compliance certification shall include all of the following (provided that the identification of applicable information may cross-reference the permit or previous reports, as applicable):

(1) The identification of each term or condition of the permit that is the basis of the certification;

(2) The identification of the method(s) or other means used by the owner or operator for determining the compliance status with each term and condition during the certification period; such methods and other means shall include, at a minimum, the methods and means required by this permit. If necessary, the owner or operator also shall identify any other material information that must be included in the certification to comply with section 113(c)(2) of the Federal Act, which prohibits knowingly making a false certification or omitting material information;

(3) The status of compliance with the terms and conditions of the permit for the period covered by the certification, including whether compliance during the period was continuous or intermittent. The certification shall be based on the method or means designated in E2(b)(2) above. The certification shall identify each deviation and take it into account in the compliance certification. The certification shall also identify as possible exceptions to compliance any periods during which compliance is required and in which an excursion* or exceedance** as defined below occurred; and

(4) Such other facts as the Technical Secretary may require to determine the compliance status of the source.

* "Excursion" shall mean a departure from an indicator range established for monitoring under this paragraph, consistent with any averaging period specified for averaging the results of the monitoring.

** "Exceedance" shall mean a condition that is detected by monitoring that provides data in terms of an emission limitation or standard and that indicates that emissions (or opacity) are greater than the applicable emission limitation or standard (or less than the applicable standard in the case of a percent reduction requirement) consistent with any averaging period specified for averaging the results of the monitoring.

The first certification shall cover the 12-month period from **April 1, 2014** to **March 31, 2015**, and shall be submitted within 60 days after the 12-month period ending **March 31, 2015**. Subsequent certifications shall be submitted within 60 days after the end of each 12-month period following the first certification.

Start of Annual Compliance Certification Period	End of Annual Compliance Certification Period	Annual Compliance Certification Due
April 1, 2014	March 31, 2015	May 30, 2015
April 1, 2015	March 31, 2016	May 30, 2016
April 1, 2016	March 31, 2017	May 30, 2017
April 1, 2017	March 31, 2018	May 30, 2018
April 1, 2018	March 31, 2019	May 30, 2019
April 1, 2019	March 31, 2020	May 30, 2020
April 1, 20XX	March 31, 20XX + 1	May 30, 20XX + 1

These certifications must be certified by a responsible official consistent with condition B4 of this permit and shall be submitted to the Nashville Environmental Field Office and U.S. EPA at the address below. In lieu of mailing a hard copy of the certification to the Nashville Environmental Field Office, the permittee may submit an electronic copy of the certification to both of the email addresses below.

Nashville Environmental Field Office Division of Air Pollution Control 711 R. S. Gass Blvd. Nashville, TN 37216 OR air.pollution.control@tn.gov and APC.NashEFO@tn.gov	and	Air and EPCRA Enforcement Branch US EPA Region IV 61 Forsyth Street, SW Atlanta, Georgia 30303

40 CFR Part 70.6(c)(5)(iii) as amended in the Federal Register Vol. 79, No.144, July 28, 2014, pages 43661 through 43667

E2(SM2). **Reporting requirements**. (continued)

(c) **Reporting required by TAPCR Chapter 18**. The permittee shall comply with the applicable reporting and recordkeeping requirements specified in TAPCR Chapter 18. TAPCR 1200-03-18-.02(8). The permittee shall submit to the Technical Secretary a summary report of the calendar year VOC emissions. This information shall be submitted before March 31 of the year following the calendar year for which the information and data are reported. Each report shall be signed by the permittee certifying that the information and data contained in the report are accurate to the best knowledge of the individual certifying the report.

(d) **Reporting required by TAPCR Chapter 27**. The permittee shall comply with the applicable reporting and recordkeeping requirements specified in TAPCR Chapter 27. TAPCR 1200-03-27-.02(6). The permittee shall submit to the Technical Secretary a summary report of the calendar year NOx emissions. This information shall be submitted before March 31 of the year following the calendar year for which the information and data are reported. Each report shall be signed by the permittee certifying that the information and data contained in the report are accurate to the best knowledge of the individual certifying the report.

(e) **NESHAP Semiannual reports.** The first report since issuance of this permit shall cover the 6-month period from **October 1, 2014**, to **March 31, 2015**, and shall be submitted within 60 days after the 6-month period ending **March 31, 2015**. Subsequent reports shall be submitted within 60 days after the end of each 6-month period as follows:

Start of Semiannual Report Period	End of Semiannual Report Period	Semiannual Report Due
October 1, 2014	March 31, 2015	May 30, 2015
April 1, 2015	September 30, 2015	November 29, 2015
October 1, 2015	March 31, 2016	May 30, 2016
April 1, 2016	September 30, 2016	November 29, 2016
October 1, 2016	March 31, 2017	May 30, 2017
April 1, 2017	September 30, 2017	November 29, 2017
October 1, 2017	March 31, 2018	May 30, 2018
April 1, 2018	September 30, 2018	November 29, 2018
October 1, 2018	March 31, 2019	May 30, 2019
April 1, 2019	September 30, 2019	November 29, 2019
October 1, 2019	March 31, 2020	May 30, 2020
April 1, 20XX	September 30, 20XX	November 29, 20XX
October 1, 20XX	March 31, 20XX + 1	May 30, 20XX + 1

These semiannual reports shall include:

(1) Any monitoring, recordkeeping or notifications required by 40 CFR 63 Subpart IIII or required by **Conditions E4-2, E4-3, E4-4, and E4-6** of this permit. However, a summary report of this data is acceptable provided there is sufficient information to enable the Technical Secretary to evaluate compliance.

(2) Any monitoring, recordkeeping or notifications required by 40 CFR 63 Subpart EEEE or required by **Conditions E5-2 and E5-3** of this permit. However, a summary report of this data is acceptable provided there is sufficient information to enable the Technical Secretary to evaluate compliance.

(3) Any monitoring, recordkeeping or notifications required by 40 CFR 63 Subpart ZZZZ or required by **Condition E75-20(MM4)** of this permit. However, a summary report of this data is acceptable provided there is sufficient information to enable the Technical Secretary to evaluate compliance.

(4) Identification of all instances of deviations from the following: **Conditions E4-1 through E4-9; E5-1 through E5-3; E44-17; E44-18; E47-17; E47-18; and E75-1 through E75-20**. The word "deviation" (in condition E2(e)(4)) shall have the meaning as defined in a dictionary; such as, departure or divergence. If no deviations occurred, all instances of no deviation must be identified.

These reports must be certified by a responsible official consistent with condition B4 of this permit and shall be submitted to the Nashville Central Office at the address below. In lieu of mailing a hard copy of the report, the permittee may submit an electronic copy of the report to the email address below.

Tennessee Division of Air Pollution Control William R. Snodgrass Tennessee Tower 312 Rosa L. Parks Avenue, 15th Floor Nashville, TN 37243	OR	air.pollution.control@tn.gov

TAPCR 1200-03-09-.02(11)(e)1.(iii)

E2(SM2). **Reporting requirements**. (continued)

(f) **NESHAP 5-year reports.** The first report since issuance of this significant modification shall cover the 5-year period from **March 22, 2013**, to **March 31, 2018**, and shall be submitted within 60 days after the 5-year period ending **March 31, 2018**. The second report shall cover the 5-year period from **April 1, 2018**, to **March 31, 2023**, and shall be submitted within 60 days after the 5-year period ending **March 31, 2023**. Subsequent reports shall be submitted within 60 days after the end of each 5-year period as follows:

Start of 5-year Report Period	End of 5-year Report Period	5-year Report Due
March 22, 2013	March 31, 2018	May 30, 2018
April 1, 2018	March 31, 2023	May 30, 2023
April 1, 20XX	March 31, 20XX + 5	May 30, 20XX + 5

These 5-year reports shall include:

(1) Any monitoring, recordkeeping or notifications required by 40 CFR 63 Subpart DDDDD or required by **Conditions E46-11, E46-12, E46-13, E61-11, E61-12, E61-13, E71-11, E71-12, and E71-13** of this permit. However, a summary report of this data is acceptable provided there is sufficient information to enable the Technical Secretary to evaluate compliance.

(2) Identification of all instances of deviations from the following: **E46-10 through E46-14; E61-10 through E61-13; and E71-10 through E71-14**. The word "deviation" (in condition E2(e)(4)) shall have the meaning as defined in a dictionary; such as, departure or divergence. If no deviations occurred, all instances of no deviation must be identified.

These reports must be certified by a responsible official consistent with Condition B4 of this permit and shall be submitted to the Nashville Central Office at the address below. In lieu of mailing a hard copy of the report, the permittee may submit an electronic copy of the report to the email address below.

Tennessee Division of Air Pollution Control William R. Snodgrass Tennessee Tower 312 Rosa L. Parks Avenue, 15th Floor Nashville, TN 37243	OR	air.pollution.control@tn.gov

TAPCR 1200-03-09-.02(11)(e)1.(iii)

E3. General Permit Requirements.

E3-1(MM4). [Reserved] This condition was removed by Minor Modification #4.

E3-2. **Records**. The permittee shall retain all records required by this permit at the source location for a period of not less than five (5) years and keep these records available for inspection by the Technical Secretary or their representative. All yearly data, including all required calculations, must be entered in the log(s) no later than thirty (30) days from the end of the year for which the data is required. All monthly data, including all required calculations, must be entered in the log(s) no later than thirty (30) days from the end of the month for which the data is required. All daily data, including all required calculations, must be entered in the log(s) no later than seven (7) days from the end of the day for which the data is required.

E3-3. Unless specified otherwise, visible emissions from this facility shall not exhibit greater than twenty percent (20%) opacity, except for one (1) six-minute period in any one (1) hour period, and for no more than four (4) six-minute periods in any twenty-four (24) hour period. Visible emissions from this source shall be determined by EPA Method 9, as published in the current 40 CFR 60, Appendix A (six-minute average).

TAPCR 1200-03-05-.03(6) and TAPCR 1200-03-05-.01(1)

Compliance Method: The permittee shall assure compliance with the opacity standard by utilizing the opacity matrix dated June 18, 1996 that is enclosed as Attachment 2.

If the magnitude and frequency of excursions reported by the permittee in the periodic monitoring for emissions is unsatisfactory to the Technical Secretary, this permit may be reopened to impose additional opacity monitoring requirements.

E3-4. Should proof of compliance for the pollutant(s) with emission limitations placed on this permit be required, the emissions measuring test method(s) and procedure(s) to be used are the following (or alternate method(s) approved by the Technical Secretary):

Pollutant or Parameter	Testing Methodology
Sulfur Dioxide	EPA Method 6 as published in the current 40 CFR 60, Appendix A
Particulate Matter	EPA Method 5 as published in the current 40 CFR 60, Appendix A
Carbon Monoxide	EPA Method 10 as published in the current 40 CFR 60, Appendix A
Nitrogen Oxides	EPA Method 7 as published in the current 40 CFR 60, Appendix A
Volatile Organic Compounds (from fuel burning sources and incinerators and incinerator destruction efficiency)	EPA Method 25A as published in the current 40 CFR 60, Appendix A
Volatile Organic Compounds (content in coatings, thinners, gasoline, etc.)	Method 24 (1 hour bake) as published in the current 40 CFR 60, Appendix A
Actual Transfer Efficiencies (except for NSPS)	An approved procedure outlined in the November 25, 1991, test protocol for the expansion.
Actual Measured Oven VOC Loading Values	An approved procedure outlined in the November 25, 1991, test protocol for the expansion.

E3-5. Unless otherwise specified, at least thirty (30) days prior to conducting any required performance test, the permittee shall notify the Technical Secretary of the test in order to afford him/her the opportunity to have an observer present. At least sixty (60) days prior to conducting any required performance test, the permittee shall submit a test protocol to the Technical Secretary for approval.

E3-6. Routine maintenance and repair, as required to comply with the specified emission limits, shall be performed on all of the air pollution control devices at this facility. Maintenance and repair records for each air pollution control device shall be recorded in a suitable permanent form. The use of computer-generated records is also acceptable. The records shall include a brief description of the maintenance/repair and the date(s) of the maintenance/repair.

E3-7. The final rule for the National Emission Standards for Hazardous Air Pollutants: Surface Coating of Automobiles and Light-Duty Trucks (40 CFR Part 63, Subpart IIII) was published in the Federal Register (69 FR 22601) on April 26, 2004. This facility is subject to this regulation. The permittee submitted the initial notification as required by 40 CFR §63.3110 in a letter dated March 31, 2005.

E3-8. The final rule for the National Emission Standards for Hazardous Air Pollutants for Surface Coating of Plastic Parts and Products (40 CFR Part 63, Subpart PPPP) was published in the Federal Register (69 FR 20967) on April 19, 2004. This facility is subject to this regulation. The permittee submitted the initial notification as required by 40 CFR §63.4510 in a letter dated March 31, 2005. Pursuant to 40 CFR §63.3082(c), the sources subject to 40 CFR Part 63, Subpart PPPP are included in the affected source subject to 40 CFR Part 63, Subpart IIII.

E3-9. The final rule for the National Emission Standards for Hazardous Air Pollutants: Surface Coating of Miscellaneous Metal Parts and Products (40 CFR Part 63, Subpart MMMM) was published in the Federal Register (69 FR 129) on January 2, 2004. This facility is subject to this regulation. The permittee submitted the initial notification as required by 40 CFR §63.3910 in a letter dated December 17, 2004. Pursuant to 40 CFR §63.3082(c), the sources subject to 40 CFR Part 63, Subpart MMMM are included in the affected source subject to 40 CFR Part 63, Subpart IIII.

E3-10. The final rule for the National Emission Standards for Hazardous Air Pollutants: Organic Liquids Distribution (40 CFR Part 63, Subpart EEEE) was published in the Federal Register (69 FR 5038) on February 3, 2004. This facility is subject to this regulation. The permittee submitted an initial notification as required by 40 CFR §63.7545 in a letter dated November 1, 2004.

E3-11. The permittee shall apply reasonably available control technology (RACT) to control NOx emissions from sources of nitrogen oxides. The reasonably available control technology requirements of this rule shall not apply to any of the following:

(a) A process emission source or fuel burning installation which neither emits nor has the potential to emit one ton or more per year of nitrogen oxides before control;
(b) Fuel burning equipment or a component of a process emission source which does not operate between April 1 and October 31; or
(c) An air pollution control device which is installed to effect compliance with a requirement of other chapters of Division 1200-03.

TAPCR 1200-03-27-.03(1)(a) and 1200-03-27-.03(4); State Only

E3-12. The permittee is not required to file an accidental release plan pursuant to Section 112(r) of the Clean Air Act and 1200-03-32 of TAPCR.

E3-13. Identification of Responsible Official, Technical Contact, and Billing Contact

a) The application that was utilized in the preparation of this permit is dated February 6, 2014, and signed by John Harris, Director, Facilities, Environmental and Systems Engineering of the permitted facility. If this person terminates his/her employment or is assigned different duties such that he/she is no longer a Responsible Official for this facility as defined in part 1200-03-09-.02(11)(b)21 of the Tennessee Air Pollution Control Regulations, the owner or operator of this air contaminant source shall notify the Technical Secretary of the change. Said notification must be in writing and must be submitted within thirty (30) days of the change. The notification shall include the name and title of the new Responsible Official and certification of truth and accuracy. All representations, agreement to terms and conditions, and covenants made by the former Responsible Official that were used in the establishment of the permit terms and conditions will continue to be binding on the facility until such time that a revision to this permit is obtained that would change said representations, agreements, and/or covenants.

b) The application that was utilized in the preparation of this permit is dated February 6, 2014, and identifies Mike Haverstick as the Principal Technical Contact for the permitted facility. If this person terminates his/her employment or is assigned different duties such that he/she is no longer the Principal Technical Contact for this facility, the owner or operator of this air contaminant source shall notify the Technical Secretary of the change. Said notification must be in writing and must be submitted within thirty (30) days of the change. The notification shall include the name and title of the new Principal Technical Contact and certification of truth and accuracy.

c) The application that was utilized in the preparation of this permit is dated February 6, 2014, and identifies Mike Haverstick as the Billing Contact for the permitted facility. If this person terminates his/her employment or is assigned different duties such that he/she is no longer the Billing Contact for this facility, the owner or operator of this air contaminant source shall notify the Technical Secretary of the change. Said notification must be in writing and must be submitted within thirty (30) days of the change. The notification shall include the name and title of the new Billing Contact and certification of truth and accuracy.

NESHAP IIII:	40 CFR Part 63, Subpart IIII - National Emission Standards for Hazardous Air Pollutants: Surface Coating of Automobiles and Light-Duty Trucks.
Conditions E4-1 through E4-8 are the NESHAP IIII requirements	

E4-1. The permittee is subject to the National Emission Standards for Hazardous Air Pollutants: Surface Coating of Automobiles and Light-Duty Trucks (40 CFR Part 63, Subpart IIII). The permittee shall comply with 40 CFR Part 63, Subpart IIII by the compliance date (April 26, 2007)

40 CFR Part 63, Subpart IIII

Compliance Method: As specified in this permit section.

E4-2. Combined organic HAP emissions from electrodeposition primer, primer-surfacer, topcoat, final repair, glass bonding primer, and glass bonding adhesive operations plus all coatings and thinners, except for deadener materials, adhesive and sealer materials that are not components of glass bonding systems, and maintenance coatings (e.g., cavity wax), used in coating operations shall be limited to no more than 0.072 kg/liter (0.60 lb/gal) of coating solids deposited during each month. The permittee may comply with alternative limits in 40 CFR §63.3091(b) and 40 CFR §63.3092.

The following sources at this facility are subject to this condition:

Title V Emission Source Reference Number	Emission Source Description
75-0155-07	Paint Line 1 Frame E-Coat Line
75-0155-51	Paint Line 1
75-0155-71	Paint Line 2 Body E-Coat Line
75-0155-68	Paint Line 2 Stoneguard and Cavity Wax Coating Line
75-0155-66	Paint Line 2 Primer Coating Line
75-0155-64	Paint Line 2 Topcoat Lines and Touch Up Operations
75-0155-25	Paint Line 2 Undercoat Booth
75-0155-53	Fascia Paint Line 1
75-0155-62	Fascia Paint Line 2
75-0155-78 (part)	Miscellaneous Sealers and Adhesives (Glass Bonding only)
75-0155-72	Service Parts E-Coat Line
75-0155-26	WWL Preparation Platforms (4) and Spray Booths with Ovens (2)

40 CFR §63.3091(a), §63.3091(f), §63.3120(b) and §63.3167(a) and (f)

Compliance Method: The permittee shall assure compliance with the emission limitation by calculating the combined organic HAPs emitted from the source(s) listed above during each calendar month and maintaining a log that contains the information specified in Attachment 3. The mass fraction organic HAP for each material used by this source shall be determined by using material safety data sheets (MSDS), EPA Method 311, EPA Method 24, manufacturer/vendor formulation data, or an alternative method approved by the Administrator. If the permittee complies with the alternative limits in 40 CFR §63.3091(b) and 40 CFR §63.3092, the permittee shall clearly state this in the log.

HAP emissions shall be calculated and maintained to demonstrate monthly compliance with the emission limit based on actual measured transfer, capture and destruction efficiencies. Methods for measuring transfer, capture, and destruction efficiencies are to follow approved protocols (e.g., the Nissan protocol dated November 25, 1991 and/or the "Protocol for determining Daily Volatile Organic Compound Emission Rate of Automobile and Light-Duty Truck Topcoat Operations," EPA-450/3-88-018).

The permittee shall notify the Technical Secretary in writing of their intent to conduct a performance test at least 60 calendar days before the performance test is scheduled to begin. The permittee shall submit reports of performance test results no later than 60 days after completing the tests.

The premittee shall assure compliance with the add-on control device operating limits of 40 CFR §63.3167(a) by assuring compliance with the add-on control device operating limits in **Conditions E22-6, E24-8, E25-7, E32-10, E35-15, and E41-6**.

Once the capture efficiencies have been established, continuous monitoring is not required on capture devices associated with a downdraft spray booth or from a flash-off area or bake oven associated with a downdraft spray booth. (Federal Register Vol. 69, No. 80, April 26, 2004, Page 22613, 3rd column, 2nd full paragraph)

E4-3. Average organic HAPs emitted from facility-wide Miscellaneous Sealers and Adhesives Usage, with the exception of glass bonding, shall not exceed 0.010 lbs HAPs per lb of material used during each month.

40 CFR §63.3091(c) and 63.3151

Compliance Method: The permittee shall demonstrate initial compliance by following the procedures specified in 40 CFR §63.3151. Following the initial compliance demonstration, the permittee shall demonstrate continuous compliance by following the procedures specified in 40 CFR §63.3152. The permittee shall assure compliance with the emission limitation by calculating the organic HAPs emitted from facility-wide Miscellaneous Sealers and Adhesives Usage, with the exception of glass bonding, during each calendar month and maintaining a log that contains the information specified in Attachment 3.

E4-4. Average organic HAPs emitted from facility-wide Deadener Materials shall not exceed 0.010 lbs HAPs per lb of material used during each month.

40 CFR §63.3091(d) and 63.3151

Compliance Method: The permittee shall demonstrate initial compliance by following the procedures specified in 40 CFR §63.3151. Following the initial compliance demonstration, the permittee shall demonstrate continuous compliance by following the procedures specified in 40 CFR §63.3152. The permittee shall assure compliance with the emission limitation by calculating the organic HAPs emitted from facility-wide Deadener Materials during each calendar month and maintaining a log that contains the information specified in Attachment 3.

E4-5. The permittee shall develop and implement a Work Practice Plan, or an alternative plan approved by the Administrator, to minimize organic HAP emissions from the storage, mixing, and conveying of coatings, thinners, and cleaning materials used in, and waste materials generated by, all coating operations for which emission limits are established. The Work Practice Plan shall also minimize organic HAP emissions from cleaning and purging of equipment associated with all coating operations for which emission limits are established.

40 CFR §63.3094(b) and (c)

Compliance Method: The permittee shall assure compliance by developing and implementing a Work Practice Plan by April 26, 2007. The Work Practice Plan shall specify practices and procedures to ensure that, at a minimum, the elements of 40 CFR §63.3094(b) are implemented. Also, the Work Practice Plan shall, at a minimum, address each of the operations listed in 40 CFR §63.3094(c) in which the permittee uses organic-HAP containing materials or in which there is a potential for emission of organic HAP.

E4-6. The permittee shall develop and implement a written Start-up, Shutdown, and Malfunction Plan (SSMP) that covers the following sources that have emission capture systems and add-on control devices:

Title V Emission Source Reference Number	Emission Sources with organic HAP Control Devices
75-0155-71	Paint Line 2 Body E-Coat Line
75-0155-66	Paint Line 2 Primer Coating Line
75-0155-64	Paint Line 2 Topcoat Lines and Touch Up Operations
75-0155-62	Fascia Paint Line 2 Plastics Plant Coating Lines
75-0155-51	Paint Line 1
75-0155-72	Service Parts E-Coat Line

40 CFR §63.6(e)(3), 63.10(d)(5), and 63.3100(f)

Compliance Method: The permittee shall assure compliance by developing and implementing an SSMP by April 26, 2007. The SSMP shall describe procedures for operating and maintaining the source during periods of startup, shutdown, and malfunction, and a program of corrective action for malfunctioning process and air pollution control and monitoring equipment used to comply with the emissions limit in **Condition E4-2**.

If a startup, shutdown, or malfunction occurs during the semiannual reporting period, and the SSMP is followed, the permittee shall submit a periodic startup, shutdown, and malfunction report. The periodic report shall summarize the actions taken to minimize emissions during such startups, shutdowns, and malfunctions. The report shall also include the number, duration, and a brief description for each type of malfunction which occurred during the reporting period and which caused or may have caused any applicable emission limitation to be exceeded. The periodic report shall be submitted with the semiannual report.

If a startup, shutdown, or malfunction occurs during the semiannual reporting period, and the SSMP is not followed, the permittee shall submit an immediate startup, shutdown, and malfunction report. The immediate report shall explain the circumstances of the event, the reasons for not following the startup, shutdown, and malfunction plan, describe all excess emissions and/or parameter monitoring exceedances which are believed to have occurred (or could have occurred in the case of malfunctions), and actions taken to minimize emissions. The immediate report shall be delivered by facsimile, telephone, or other means to the Technical Secretary within 2 working days. The permittee shall also submit a letter to the Technical Secretary within 7 working days after the end of the event, unless otherwise agreed upon with the Technical Secretary.

E4-7. Pursuant to 40 CFR §63.3165, the permittee must use the procedures and test methods in this section to determine capture efficiency as part of the performance test required by 40 CFR §63.3160. For purposes of this subpart, a spray booth air seal is not considered a natural draft opening in a PTE or a temporary total enclosure provided the permittee demonstrates that the direction of air movement across the interface between the spray booth air seal and the spray booth is into the spray booth. For purposes of this subpart, a bake oven air seal is not considered a natural draft opening in a PTE or a temporary total enclosure provided the permittee demonstrates that the direction of air movement across the interface between the bake oven air seal and the bake oven is into the bake oven. The permittee may use lightweight strips of fabric or paper, or smoke tubes to make such demonstrations as part of showing that the capture system is a PTE or conducting a capture efficiency test using a temporary total enclosure. The permittee cannot count air flowing from a spray booth air seal into a spray booth as air flowing through a natural draft opening into a PTE or into a temporary total enclosure unless the permittee elects to treat that spray booth air seal as a natural draft opening. The permittee cannot count air flowing from a bake oven air seal into a bake oven as air flowing through a natural draft opening into a PTE or into a temporary total enclosure unless the permittee elects to treat that bake oven air seal as a natural draft opening. Pursuant to 40 CFR §63.3165(a), the permittee may assume the capture system efficiency is 100 percent if both of the conditions in paragraphs (a)(1) and (2) of this condition are met:

(1) The capture system meets the criteria in Method 204 of appendix M to 40 CFR part 51 for a Permanent Total Enclosure (PTE) and directs all the exhaust gases from the enclosure to an add-on control device.

(2) All coatings and thinners used in the coating operation are applied within the capture system, and coating solvent flash-off and coating curing and drying occurs within the capture system. For example, this criterion is not met if parts enter the open shop environment when being moved between a spray booth and a curing oven.

40 CFR §63.3165(a)

Compliance Method: The permittee shall certify annually that the above criteria are met for each PTE.

E4-8. The following are the criteria for a Temporary Total Enclosure (TTE) and a Permanent Total Enclosure (PTE):

a. *Criteria for Temporary Total Enclosure*

a.1 Any Natural Draft Opening (NDO) shall be at least four equivalent opening diameters from each VOC emitting point unless otherwise specified by the Administrator.

a.2 Any exhaust point from the enclosure shall be at least four equivalent duct or hood diameters from each NDO.

a.3 The total area of all NDO's shall not exceed 5 percent of the surface area of the enclosure's four walls, floor, and ceiling.

a.4 The average facial velocity (FV) of air through all NDO's shall be at least 3,600 m/hr (200 fpm). The direction of air flow through all NDO's shall be into the enclosure.

a.5 All access doors and windows whose areas are not included in section a.3 and are not included in the calculation in section a.4 shall be closed during routine operation of the process.

b. *Criteria for a Permanent Total Enclosure*

b.1 Same as sections a.1 and a.3 through a.5.

b.2 All VOC emissions must be captured and contained for discharge through a control device

40 CFR part 51, Appendix M, Method 204

Compliance Method: The permittee shall certify annually that the above criteria are met for each PTE.

NESHAP EEEE:	40 CFR Part 63, Subpart EEEE - National Emission Standards for Hazardous Air Pollutants: Organic Liquids Distribution (Non-Gasoline)
Conditions E5-1 through E5-3 are the NESHAP EEEE requirements	

E5-1. The permittee is subject to the National Emission Standards for Hazardous Air Pollutants: Organic Liquids Distribution (Non-Gasoline) (40 CFR 63, Subpart EEEE).

40 CFR Part 63, Subpart EEEE

Compliance Method: The permittee shall comply with 40 CFR Part 63, Subpart EEEE by the compliance date (February 5, 2007).

E5-2. The permittee shall maintain a list of all storage tanks that are subject to 40 CFR Part 63, Subpart EEEE.

40 CFR §63.2343(b)

Compliance Method: The permittee shall assure compliance by maintaining a list of these storage tanks. The list shall identify each storage tank, its capacity, the organic liquid HAP, and the annual average true vapor pressure of the organic liquid HAP.

E5-3. The permittee shall submit Semiannual Compliance Reports.

40 CFR §63.2342(b)

Compliance Method: The permittee shall assure compliance by submitting the information required by 40 CFR §63.2386(c) and (d)

75-0155-90	Paint Line 1 Body and Frame Pretreatment Lines
Condition E11-1 applies to source 75-0155-90.	

E11-1. Volatile organic compounds (VOC) emitted from this source (75-0155-90) shall not exceed 5.3 tons per calendar month and 10.0 tons during all intervals of 12 consecutive months.

TAPCR 1200-03-07-.07(2) and 1200-03-09-.01(4); This limitation is part of a PSD netting analysis.

Compliance Method: The permittee shall assure compliance with the emission limitations by calculating the total VOC emitted from this source during each calendar month and each interval of 12 consecutive calendar months and maintaining a log that contains the information specified in Attachment 3. The VOC content of all VOC-containing process materials used by this source shall be determined by using material safety data sheets (MSDS) or manufacturer or vendor formulation data which explicitly list the VOC content by weight (pounds per gallon or weight percent).

75-0155-07	Paint Line 1 Frame E-Coat Line NSPS
Conditions E12-1 through E12-5 apply to source 75-0155-07.	

E12-1. Volatile organic compounds (VOC) emitted from this source (75-0155-07) shall not exceed 1.5 pounds per gallon of solids applied.

TAPCR 1200-03-07-.07(2) and 1200-03-09-.01(5) Nonattainment NSR evaluation 10/25/80

Compliance Method: The permittee shall assure compliance with the emission limitation in **Condition E12-1** by assuring compliance with the emission limitation in **Condition E12-2**.

E12-2. Volatile organic compounds (VOC) emitted from this source (75-0155-07) shall not exceed 0.16 kilograms per liter of coating solids applied (1.34 pounds per gallon of solids applied), monthly weighted average.

TAPCR 1200-03-16-.34(3)(a)

Compliance Method: The permittee shall assure compliance with the emission limitation by calculating the monthly volume weighted average mass of VOC per volume of applied coating solids and maintaining a log that contains the information specified in Attachment 3. The permittee shall use the procedures in TAPCR 1200-03-16-.34(4)(c)1. to calculate emissions. The VOC content of all VOC-containing process materials used by this source shall be determined by using material safety data sheets (MSDS), EPA Method 24, or manufacturer/vendor formulation data which explicitly list the VOC content by weight (pounds per gallon or weight percent).

E12-3. Volatile organic compounds (VOC) emitted from this source (75-0155-07) shall not exceed 0.17 kilograms per liter of coating solids applied (1.4 pounds per gallon of solids applied), monthly weighted average.

TAPCR 1200-03-18-.11(3)(a)3 and 40 CFR §60.392(a)(1)(i)

Compliance Method: The permittee shall assure compliance with the emission limitation in **Condition E12-3** by assuring compliance with the emission limitation in **Condition E12-2**.

E12-4. The permittee shall comply with the reporting and recordkeeping requirements specified in the compliance method below.

TAPCR 1200-03-16-.34, 1200-03-18-.11, and 40 CFR §60.395

Compliance Method: The permittee shall identify, record, and submit a written report every calendar quarter (postmarked not later than thirty (30) days after the end of the calendar quarter) of each instance in which the volume weighted average of the total mass of VOC's emitted to the atmosphere per volume of applied coating solids is greater than the limit specified in **Condition E12-2**. If no such instances have occurred during a particular quarter, a report stating this shall be submitted in accordance with **Condition E2**.

E12-5. Volatile organic compounds (VOC) emitted from this source (75-0155-07) shall not exceed 63.0 tons during all intervals of 12 consecutive months.

TAPCR 1200-03-07-.01(5); Agreement Letter Dated March 14, 2008

Compliance Method: The permittee shall assure compliance with the emission limitations by calculating the total VOC emitted from this source during each calendar month and each interval of 12 consecutive calendar months and maintaining a log that contains the information specified in Attachment 3. The VOC content of all VOC-containing process materials used by this source shall be determined by using material safety data sheets (MSDS), EPA Method 24, or manufacturer/vendor formulation data which explicitly list the VOC content by weight (pounds per gallon or weight percent).

75-0155-89	Paint Line 2 Pretreatment Line
Condition E21-1 applies to source 75-0155-89.	

E21-1. Volatile organic compounds (VOC) emitted from this source (75-0155-89) shall not exceed 1.6 tons per calendar month and 9.53 tons during all intervals of 12 consecutive months.

TAPCR 1200-03-07-.07(2)

Compliance Method: The permittee shall assure compliance with the emission limitations by calculating the total VOC emitted from this source during each calendar month and each interval of 12 consecutive calendar months and maintaining a log that contains the information specified in Attachment 3. The VOC content of all VOC-containing process materials used by this source shall be determined by using material safety data sheets (MSDS), EPA Method 24, or manufacturer/vendor formulation data which explicitly list the VOC content by weight (pounds per gallon or weight percent).

75-0155-71	Paint Line 2 Body E-Coat Line LAER, NSPS Thermal Oxidizer Control
Conditions E22-1 through E22-7 apply to source 75-0155-71.	

E22-1. Volatile organic compounds (VOC) emitted from this source (75-0155-71) shall not exceed 79.2 tons during all intervals of 12 consecutive months.

TAPCR 1200-03-09-.01(5) Nonattainment NSR evaluation 5/11/89

Compliance Method: The permittee shall assure compliance with the emission limitation by calculating the total VOC emitted from this source during each calendar month and each interval of 12 consecutive calendar months and maintaining a log that contains the information specified in Attachment 3. The VOC content of all VOC-containing process materials used by this source shall be determined by using material safety data sheets (MSDS), EPA Method 24, or manufacturer/vendor formulation data which explicitly list the VOC content by weight (pounds per gallon or weight percent).

E22-2. Volatile organic compounds (VOC) emitted from this source (75-0155-71) shall not exceed 0.51 pounds per gallon of solids applied (daily weighted average).

TAPCR 1200-03-09-.01(5) Nonattainment NSR evaluation 5/11/89

Compliance Method: The permittee shall assure compliance with the VOC coating solids applied limitation by calculating the daily volume weighted average mass of VOC emitted per volume of applied coating solids and maintaining a log that contains the information specified in Attachment 3. VOC emissions from this source shall be based on VOC contents as described in **Condition E22-1**, established oven VOC loading values, and incinerator VOC destruction efficiency (EPA Method 25A).

E22-3. Volatile organic compounds (VOC) emitted from this source (75-0155-71) shall not exceed 0.16 kilograms per liter of solids applied (1.33 pounds per gallon of solids applied), monthly weighted average.

TAPCR 1200-03-16-.34(3)(a)

Compliance Method: The permittee shall assure compliance with the emission limitation in **Condition E22-3** by assuring compliance with the emission limitation in **Condition E22-2**.

E22-4. Volatile organic compounds (VOC) emitted from this source (75-0155-71) shall not exceed 0.17 kilograms per liter of solids applied (1.4 pounds per gallon of solids applied), monthly weighted average.

40 CFR §60.392(a)(1)(i) and TAPCR 1200-03-18-.11(3)(a)3.

Compliance Method: The permittee shall assure compliance with the emission limitation in **Condition E22-4** by assuring compliance with the emission limitation in **Condition E22-2**.

E22-5. The permittee shall comply with the reporting and recordkeeping requirements specified in the compliance method below.

TAPCR 1200-03-16-.34(6), 1200-03-18-.11(8)(e), and 40 CFR §60.395

Compliance Method: The permittee shall identify, record, and submit a written report every calendar quarter (postmarked not later than thirty (30) days after the end of the calendar quarter) of each instance in which the volume weighted average of the total mass of VOC's emitted to the atmosphere per volume of applied coating solids is greater than the limit specified in **Conditions E22-2, E22-3,** or **E22-4**. If no such instances have occurred during a particular quarter, a report stating this shall be submitted in accordance with **Condition E2**. Where compliance is achieved through the use of a capture system and control device, the volume weighted average after the control device should be reported.

The permittee shall continuously (i.e., a minimum of one every fifteen minutes) record the incinerator combustion temperature during coating operations for thermal incineration during coating operations. The permittee shall report in accordance with **Condition E2** as follows: every three-hour period shall be reported during which the average temperature measured for the thermal incinerator(s) is more than 28°C (50°F) less than the average temperature during the most recent control device performance test at which the destruction efficiency was determined. If no such periods occur, the permittee shall submit a negative report.

E22-6. The transfer efficiency for this source was determined to be 100% (per 40 CFR §60.393(c)(1)(i)(C) and 40 CFR §63.3161(g)) The capture efficiency for this source was determined by mass balance to be 70% (Based on PPG Data and Industry Standard). Performance testing showed the operating temperatures and destruction efficiencies as follows:

Description	Operating Temperature of Exhaust Oxidizer	Destruction Efficiency
Paint Line 2 Body E-Coat Line	1,100°F	93.0%
Paint Line 2 Body E-Coat Line	1,399°F	98.7%

Performance tests may be conducted to set different operating temperatures, destruction efficiencies, capture efficiencies, and transfer efficiencies. The Division shall be given at least thirty (30) days advance notice before conducting such a performance test. The new values shall be incorporated into this permit by administrative permit amendment.

E22-7. Visible emissions from this source (75-0155-71) shall not exceed ten (10) percent opacity (6-minute average). Visible emissions from this source shall be determined by EPA Method 9, as published in the current 40 CFR 60, Appendix A (6 minute average).

TAPCR 1200-03-05-.03(6)
Compliance Method: The permittee shall assure compliance with the opacity standard by utilizing the opacity matrix dated June 18, 1996 that is enclosed as Attachment 2.

If the magnitude and frequency of excursions reported by the permittee in the periodic monitoring for emissions is unsatisfactory to the Technical Secretary, this permit may be reopened to impose additional opacity monitoring requirements.

75-0155-68	Paint Line 2 Stoneguard and Cavity Wax Coating Line LAER
Conditions E23-1 through E23-4 apply to source 75-0155-68.	

E23-1(MM2). Volatile organic compounds (VOC) emitted from this source (75-0155-68) shall not exceed 44.0 tons during all intervals of 12 consecutive months.

TAPCR 1200-03-09-.01(5) Nonattainment NSR evaluation 5/11/89

Compliance Method: The permittee shall assure compliance with the emission limitations by calculating the total VOC emitted from this source during each calendar month and each interval of 12 consecutive calendar months and maintaining a log that contains the information specified in Attachment 3. The VOC content of all VOC-containing process materials used by this source shall be determined by using material safety data sheets (MSDS) or manufacturer or vendor formulation data which explicitly list the VOC content by weight (pounds per gallon or weight percent).

E23-2. Volatile organic compounds (VOC) contents for this source (75-0155-68) shall not exceed 3.64 pounds of VOC per gallon of Stoneguard and 3.00 pounds of VOC per gallon of cavity wax as applied, less water and less negligibly photochemically reactive materials.

TAPCR 1200-03-07-.07(2) and 1200-03-09-.01(5) Nonattainment NSR evaluation 5/11/89

Compliance Method: The permittee shall assure compliance with the VOC content limitation by calculating the monthly volume weighted average mass of VOC per volume of coating as applied and maintaining a log that contains the information specified in Attachment 3. The as-applied VOC content of all VOC-containing process materials used by this source shall be determined by using material safety data sheets (MSDS), EPA Method 24, or manufacturer/vendor formulation data which explicitly list the VOC content by weight (pounds per gallon or weight percent).

E23-3. Particulate matter (PM) emitted from this source (75-0155-68) shall not exceed 0.02 pounds per hour and 0.04 tons per calendar year.

TAPCR 1200-03-07-.01(5) and PSD Avoidance agreement letter dated May 11, 1989, signed by the permittee on May 12, 1989

Compliance Method: The permittee shall assure compliance with the emission limitation by using exhaust filters and keeping records. This source shall not operate without the use of exhaust filters during normal operation. The permittee shall keep a log denoting the actual day(s) that filters were replaced.

E23-4. Visible emissions from this source (75-0155-68) shall not exceed ten (10) percent opacity (6-minute average). Visible emissions from this source shall be determined by EPA Method 9, as published in the current 40 CFR 60, Appendix A (6 minute average).

TAPCR 1200-03-05-.03(6)

Compliance Method: The permittee shall assure compliance with the opacity standard by utilizing the opacity matrix dated June 18, 1996 that is enclosed as Attachment 2.

If the magnitude and frequency of excursions reported by the permittee in the periodic monitoring for emissions is unsatisfactory to the Technical Secretary, this permit may be reopened to impose additional opacity monitoring requirements.

75-0155-66	Paint Line 2 Primer Coating Line NSPS, LAER Waterwash and Thermal Oxidizer Control
Conditions E24-1 through E24-10 apply to source 75-0155-66.	

E24-1(SM1). Particulate matter (PM) emitted from this source (75-0155-66) shall not exceed 0.90 pounds per hour.

TAPCR 1200-03-07-.01(5) and 1200-03-09-.01(4) PSD evaluation 5/11/89

Compliance Method: This source shall not operate without the use of the spray booth downdraft waterwash system. A daily log shall be maintained indicating that the spray booth downdraft waterwash system was operating properly while the source was in operation.

E24-2(SM2). Volatile organic compounds (VOC) emitted from this source (75-0155-66) shall not exceed 258.2 tons during all intervals of 12 consecutive months.

TAPCR 1200-03-09-.01(5) Nonattainment NSR evaluation 5/11/89

Compliance Method: The permittee shall assure compliance with the emission limitations by calculating the total VOC emitted from this source during each calendar month and each interval of 12 consecutive calendar months and maintaining a log that contains the information specified in Attachment 3. The VOC content of all VOC-containing process materials used by this source shall be determined by using material safety data sheets (MSDS), EPA Method 24, or manufacturer/vendor formulation data which explicitly list the VOC content by weight (pounds per gallon or weight percent).

E24-3. Volatile organic compounds (VOC) emitted from this source (75-0155-66) shall not exceed the following:

9.01 pounds per gallon of solids applied for primer (daily weighted average);
12.84 pounds per gallon of solids applied for chip primer (daily weighted average);
19.01 pounds per gallon of solids applied for blackout (daily weighted average).

The permittee shall use actual transfer efficiencies. The permittee shall include the effect of oven exhaust incineration.

TAPCR 1200-03-09-.01(5) Nonattainment NSR evaluation 5/11/89

Compliance Method: The permittee shall assure compliance with the VOC coating solids applied limitation by calculating the daily volume weighted average mass of VOC emitted per volume of applied coating solids and maintaining a log that contains the information specified in Attachment 3. VOC emissions from this source shall be based on previous testing of actual measured transfer efficiency (based on approved protocol), measured oven VOC loading values (laboratory panel test), VOC contents as described in **Condition E24-2**, and incinerator VOC destruction efficiency (EPA Method 25A).

E24-4. Volatile organic compounds (VOC) emitted from the primer shall not exceed 1.40 kilograms per liter of solids applied (11.68 pounds per gallon of solids applied). The permittee shall use the transfer efficiencies stated in the EPA performance test and compliance provisions, 40 CFR 60.393, subpart MM, for primer-surfacer.

TAPCR 1200-03-16-.34(3)(b) and 40 CFR §60.392(b)

Compliance Method: The permittee shall assure compliance with the VOC coating solids applied limitation by calculating the monthly volume weighted average mass of VOC emitted per volume of applied coating solids after the control device and maintaining a log that contains the information specified in Attachment 3. The permittee shall use the procedures in TAPCR 1200-03-16-.34(4)(c)2. to calculate emissions.

E24-5. Volatile organic compounds (VOC) emitted from this source (75-0155-66) shall not exceed 1.8 kilograms per liter of solids applied (15.1 pounds per gallon of solids applied) (daily weighted average).

TAPCR 1200-03-18-.11(3)(b)1

Compliance Method: The permittee shall assure compliance with the VOC coating solids applied limitation by calculating the daily volume weighted average mass of VOC emitted per volume of applied coating solids after the control device and maintaining a log that contains the information specified in Attachment 3.

E24-6. The permittee shall comply with the applicable emission limits (from TAPCR 1200-03-18-.11) for any prime coat, final repair, or primer surfacer operation by:

(a) Installing and operating a capture system and a control device on that operation;

(b) Determining for each day the overall emission reduction efficiency needed to demonstrate compliance. The overall emission reduction needed is the lesser of the value calculated according to the procedure in TAPCR 1200-03-18 or 95 percent; and

(c) Demonstrating each day that the overall emission reduction efficiency achieved is greater than or equal to the overall emission reduction efficiency required.

TAPCR 1200-03-18-.11(5)

E24-7. The permittee shall comply with the reporting and recordkeeping requirements specified in the compliance method below.

TAPCR 1200-03-16-.34(6), 1200-03-18-.11(8)(e), and 40 CFR §60.395

Compliance Method: The permittee shall identify, record, and submit a written report every calendar quarter (postmarked not later than thirty (30) days after the end of the calendar quarter) of each instance in which the volume weighted average of the total mass of VOC's emitted to the atmosphere per volume of applied coating solids is greater than the limit specified in **Conditions E24-4** and **E24-5**. If no such instances have occurred during a particular quarter, a report stating this shall be submitted in accordance with **Condition E2**. Where compliance is achieved through the use of a capture system and control device, the volume weighted average after the control device should be reported.

The permittee shall continuously (i.e., a minimum of once every fifteen minutes) record the incinerator combustion temperature during coating operations for thermal incineration during coating operations. The permittee shall report in accordance with **Condition E2** as follows: every three-hour period shall be reported during which the average temperature measured for the thermal incinerator(s) is more than 28°C (50°F) less than the average temperature during the most recent control device performance test at which the destruction efficiency was determined. If no such periods occur, the permittee shall submit a negative report.

E24-8(MM2). The transfer efficiencies for this source were determined to be as follows:

Model	Prime	Chip Primer	Blackout
Sedan	69.9%	75.32%	Not in use
Hatchback	76.48%	74.79%	Not in use

The VOC capture efficiency has been determined to be 27.88% for the primer (per test on February 20, 2007). Performance testing showed the operating temperatures and destruction efficiencies as follows:

Description	Operating Temperature of Exhaust Oxidizer	Destruction Efficiency
Paint Line 2 Primer Coating Line – East (No. 2)	1,235°F	83.5%
Paint Line 2 Primer Coating Line – East (No. 2)	1,401°F	99.0%
Paint Line 2 Primer Coating Line – West (No. 1)	1,230°F	86.81%
Paint Line 2 Primer Coating Line – West (No. 1)	1,401°F	99.99%

Performance tests may be conducted to set different operating temperatures, destruction efficiencies, capture efficiencies, and transfer efficiencies. The Division shall be given at least thirty (30) days advance notice before conducting such a performance test.

E24-9. Visible emissions from this source (75-0155-66) shall not exceed ten (10) percent opacity (6-minute average). Visible emissions from this source shall be determined by EPA Method 9, as published in the current 40 CFR 60, Appendix A (6 minute average).

TAPCR 1200-03-05-.03(6)

Compliance Method: The permittee shall assure compliance with the opacity standard by utilizing the opacity matrix dated June 18, 1996 that is enclosed as Attachment 2.

If the magnitude and frequency of excursions reported by the permittee in the periodic monitoring for emissions is unsatisfactory to the Technical Secretary, this permit may be reopened to impose additional opacity monitoring requirements.

E24-10. This source (75-0155-66) is subject to 40 CFR Part 64-Compliance Assurance Monitoring (CAM) for particulate matter. The following table summarizes the CAM requirements:

Downdraft Waterwash System

Indicator Type	Work practices.
Measurement Approach	The permittee shall maintain a log of daily inspections to document proper operation of the waterwash system. The permittee shall conduct preventative maintenance to maintain the integrity of the waterwash system.
Indicator Range/Indicator Level	An excursion is defined as a forced shutdown of coating operations due to the buildup of overspray in the coating booth.
QIP Threshold	Not applicable.
Performance Criteria: Data Representativeness	Not applicable.
Performance Criteria: Verification of Operational Status	Not applicable.
QA/QC Practices and Criteria	Not applicable.
Monitoring Frequency: Data Collection Procedures	The permittee shall maintain a daily operating log. The permittee shall maintain a copy of the manufacturer's specifications for the operation and maintenance of the spray booth process equipment and the downdraft waterwash system. The permittee shall keep a log of routine preventative maintenance and nonroutine maintenance.
Monitoring Frequency: Averaging Period	Not applicable.

75-0155-64	Paint Line 2 Topcoat Lines and Touch Up Operations NSPS, LAER Waterwash and Thermal Oxidizer Control
Conditions E25-1 through E25-9 apply to source 75-0155-64.	

E25-1(SM1). Particulate matter (PM) emitted from this source (75-0155-64) shall not exceed 1.51 pounds per hour.

TAPCR 1200-03-07-.01(5) and 1200-03-09-.01(4) PSD evaluation 5/11/89

Compliance Method: This source shall not operate without the use of the spray booth downdraft waterwash system. A daily log shall be maintained indicating that the spray booth downdraft waterwash system was operating properly while the source was in operation.

E25-2. Volatile organic compounds (VOC) emitted from this source (75-0155-64) shall not exceed 441.6 tons during all intervals of 12 consecutive months for topcoats, clearcoats, and touch up paints.

TAPCR 1200-03-09-.01(5) Nonattainment NSR evaluation 5/11/89

Compliance Method: The permittee shall assure compliance with the emission limitation by calculating the total VOC emitted from this source during each calendar month and each interval of 12 consecutive calendar months and maintaining a log that contains the information specified in Attachment 3. The VOC content of all VOC-containing process materials used by this source shall be determined by using material safety data sheets (MSDS), EPA Method 24, or manufacturer/vendor formulation data which explicitly list the VOC content by weight (pounds per gallon or weight percent).

E25-3. Volatile organic compounds (VOC) emitted from this source (75-0155-64) shall not exceed 1.20 kilograms per liter of solids applied (10.01 pounds per gallon of solids applied), daily weighted average, using actual transfer efficiencies.

TAPCR 1200-03-09-.01(5) Nonattainment NSR evaluation 5/11/89

Compliance Method: The permittee shall assure compliance with the VOC coating solids applied limitation by calculating the daily volume weighted average mass of VOC emitted per volume of applied coating solids and maintaining a log that contains the information specified in Attachment 3. VOC emissions from this source shall be based on previous testing of actual measured transfer efficiency (based on approved protocol), measured oven VOC loading values (laboratory panel test), VOC contents as described in Condition **E25-2** and incinerator VOC destruction efficiency (EPA Method 25A).

E25-4. Volatile organic compounds (VOC) emitted from this source (75-0155-64) shall not exceed 1.8 kilograms per liter of solids applied (15.1 pounds per gallon of solids applied).

TAPCR 1200-03-18-.11(3)(b)1

Compliance Method: The permittee shall assure compliance with the emission limitation in **Condition E25-4** by assuring compliance with the emission limitation in **Condition E25-3**.

E25-5. Volatile organic compounds (VOC) emitted from this source (75-0155-64) shall not exceed 1.47 kilograms per liter of solids applied (12.26 pounds per gallon of solids applied).

TAPCR 1200-03-16-.34(3)(c) and 40 CFR 60.392(c)

Compliance Method: The permittee shall assure compliance with the emission limitation in **Condition E25-5** by assuring compliance with the emission limitation in **Condition E25-3**.

E25-6. The permittee shall comply with the reporting and recordkeeping requirements specified in the compliance method below.

TAPCR 1200-03-16-.34(6), 1200-03-18-.11(8)(e), and 40 CFR §60.395

Compliance Method: The permittee shall identify, record, and submit a written report every calendar quarter (postmarkednot later than thirty (30) days after the end of the calendar quarter) of each instance in which the volume weighted average of the total mass of VOC's emitted to the atmosphere per volume of applied coating solids is greater than the limit specified in **Conditions E25-3, E25-4,** and **E25-5**. If no such instances have occurred during a particular quarter, a report stating this shall be submitted in accordance with **Condition E2**. Where compliance is achieved through the use of a capture system and control device, the volume weighted average after the control device should be reported.

The permittee shall continuously (i.e., a minimum of one every fifteen minutes) record the incinerator combustion temperature during coating operations for thermal incineration during coating operations. The permittee shall report in accordance with **Condition E2** as follows: every three-hour period shall be reported during which the average temperature measured for the thermal incinerator(s) is more than 28°C (50°F) less than the average temperature during the most recent control device performance test at which the destruction efficiency was determined. If no such periods occur, the permittee shall submit a negative report.

E25-7(MM2). The transfer efficiencies for this source were determined to be as follows:

Model	Metallic Basecoat	Non-Metallic Basecoat	Clearcoat
Sedan	46.15%	57.15%	71.67%
Hatchback	44.43%	80.33%	71.64%

The VOC capture efficiencies have been determined to be: 3.91% for basecoat (per test on March 16, 2007) and 26.09% for clearcoat (per test on March 6, 2007). Performance testing showed the operating temperatures and destruction efficiencies as follows:

Description	Oven Temperature of Exhaust Oxidizer	Destruction Efficiency
Paint Line 2 Topcoat Lines – Color 3 – West (No.1)	1,400°F	99.8%
Paint Line 2 Topcoat Lines – Color 3 – West (No.1)	1,168°F	88.1%
Paint Line 2 Topcoat Lines – Color 3 – East (No.2)	1400°F	99.7%
Paint Line 2 Topcoat Lines – Color 3 – East (No.2)	1,147°F	83.2%
Paint Line 2 Topcoat Lines – Color 4 – West (No.1)	1,396°F	99.98%
Paint Line 2 Topcoat Lines – Color 4 – West (No.1)	1,199°F	95.0%
Paint Line 2 Topcoat Lines – Color 4 - West (No.1)	1,099°F	79.9%
Paint Line 2 Topcoat Lines – Color 4 – East (No.2)	1,400°F	99.2%
Paint Line 2 Topcoat Lines – Color 4 – East (No.2)	1,207°F	94.2%
Paint Line 2 Topcoat Lines – Color 4 – East (No.2)	1,101°F	92.3%

Performance tests may be conducted to set different operating temperatures, destruction efficiencies, capture efficiencies, and transfer efficiencies. The Division shall be given at least thirty (30) days advance notice before conducting such a performance test.

E25-8. Visible emissions from this source (75-0155-64) shall not exceed ten (10) percent opacity (6-minute average). Visible emissions from this source shall be determined by EPA Method 9, as published in the current 40 CFR 60, Appendix A (6 minute average).

TAPCR 1200-03-05-.03(6)

Compliance Method: The permittee shall assure compliance with the opacity standard by utilizing the opacity matrix dated June 18, 1996 that is enclosed as Attachment 2. Reports and certifications shall be submitted in accordance.

If the magnitude and frequency of excursions reported by the permittee in the periodic monitoring for emissions is unsatisfactory to the Technical Secretary, this permit may be reopened to impose additional opacity monitoring requirements.

E25-9. This source (75-0155-64) is subject to 40 CFR Part 64-Compliance Assurance Monitoring (CAM) for particulate matter. The following table summarizes the CAM requirements:

Downdraft Waterwash System

Indicator Type	Work practices.
Measurement Approach	The permittee shall maintain a log of daily inspections to document proper operation of the waterwash system. The permittee shall conduct preventative maintenance to maintain the integrity of the waterwash system.
Indicator Range/Indicator Level	An excursion is defined as a forced shutdown of coating operations due to the buildup of overspray in the coating booth.
QIP Threshold	Not applicable.
Performance Criteria: Data Representativeness	Not applicable.
Performance Criteria: Verification of Operational Status	Not applicable.
QA/QC Practices and Criteria	Not applicable.
Monitoring Frequency: Data Collection Procedures	The permittee shall maintain a daily operating log. The permittee shall maintain a copy of the manufacturer's specifications for the operation and maintenance of the spray booth process equipment and the downdraft waterwash system. The permittee shall keep a log of routine preventative maintenance and nonroutine maintenance.
Monitoring Frequency: Averaging Period	Not applicable.

75-0155-70	Paint Line 2 Cavity Wax Booth Exhaust Filter Control
Conditions E26-1 through 26-4 apply to source 75-0155-70.	

E26-1. Particulate matter (PM) emitted from this source (75-0155-70) shall not exceed 0.02 pounds per hour and 0.1 tons during all intervals of 12 consecutive months.

TAPCR 1200-03-07-.01(5) and 1200-03-09-.01(4) PSD evaluation 5/11/89

Compliance Method: The permittee shall assure compliance with the emission limitation by using exhaust filters and keeping records. This source shall not operate without the use of exhaust filters during normal operation. The permittee shall keep a log denoting the actual day(s) that filters were replaced.

E26-2. Volatile organic compound (VOC) contents for this source (75-0155-70) shall not exceed 3.00 pounds per gallon for cavity wax and 3.00 pounds per gallon for blackout as applied.

TAPCR 1200-03-07-.07(2) and 1200-03-09-.01(5) Nonattainment NSR evaluation 5/11/89

Compliance Method: The permittee shall assure compliance with the VOC content limitation by calculating the monthly volume weighted average mass of VOC per volume of coating as applied and maintaining a log that contains the information specified in Attachment 3. The as applied VOC content of all VOC-containing materials used by this source shall be determined by using material safety data sheets (MSDS), EPA Method 24, or manufacturer/vendor formulation data which explicitly list the VOC content by weight (pounds per gallon or weight percent).

E26-3. Volatile organic compounds (VOC) emitted from this source (75-0155-70) shall not exceed 42.2 tons during all intervals of 12 consecutive months.

TAPCR 1200-03-09-.01(5) Nonattainment NSR evaluation 5/11/89

Compliance Method: The permittee shall assure compliance with the emission limitation by calculating the total VOC emitted from this source during each calendar month and each interval of 12 consecutive calendar months and maintaining a log that contains the information specified in Attachment 3. The VOC content of all VOC-containing process materials used by this source shall be determined by using material safety data sheets (MSDS) or manufacturer or vendor formulation data which explicitly list the VOC content by weight (pounds per gallon or weight percent).

E26-4. Visible emissions from this source (75-0155-70) shall not exceed ten (10) percent opacity (6-minute average). Visible emissions from this source shall be determined by EPA Method 9, as published in the current 40 CFR 60, Appendix A (6 minute average).

TAPCR 1200-03-05-.03(6)

Compliance Method: The permittee shall assure compliance with the opacity standard by utilizing the opacity matrix dated June 18, 1996 that is enclosed as Attachment 2.

If the magnitude and frequency of excursions reported by the permittee in the periodic monitoring for emissions is unsatisfactory to the Technical Secretary, this permit may be reopened to impose additional opacity monitoring requirements.

75-0155-25	Paint Line 2 Undercoat Booth Exhaust Filter Control
Conditions E27-1 through E27-5 apply to source 75-0155-25.	

E27-1. Particulate matter (PM) emitted from this source (75-0155-25) shall not exceed 0.07 pounds per hour and 0.15 tons during all intervals of 12 consecutive months.

TAPCR 1200-03-07-.01(5) and PSD Avoidance agreement letter dated May 11, 1989, signed by David Miller May 12, 1989

Compliance Method: The permittee shall assure compliance with the emission limitation by using exhaust filters and keeping records. This source shall not operate without the use of exhaust filters during normal operation. The permittee shall keep a log denoting the actual day(s) that filters were replaced.

E27-2. Volatile organic compound (VOC) content for this source (75-0155-25) shall not exceed 0.234 pounds per gallon for undercoat as applied.

TAPCR 1200-03-07-.07(2) and 1200-03-9-.01(5) Nonattainment NSR evaluation 5/11/89

Compliance Method: The permittee shall assure compliance with the VOC content limitation by calculating the monthly volume weighted average mass of VOC per volume of coating as applied and maintaining a log that contains the information specified in Attachment 3. The as applied VOC content of all VOC-containing coatings used by this source shall be determined by using material safety data sheets (MSDS), EPA Method 24, or manufacturer/vendor formulation data which explicitly list the VOC content by weight (pounds per gallon or weight percent).

E27-3. Volatile organic compounds (VOC) emitted from this source (75-0155-25) shall not exceed 17.9 tons during all intervals of 12 consecutive months.

TAPCR 1200-03-09-.01(5) Nonattainment NSR evaluation 5/11/89

Compliance Method: The permittee shall assure compliance with the emission limitation by calculating the total VOC emitted from this source during each calendar month and each interval of 12 consecutive calendar months and maintaining a log that contains the information specified in Attachment 3. The VOC content of all VOC-containing process materials used by this source shall be determined by using material safety data sheets (MSDS) or manufacturer or vendor formulation data which explicitly list the VOC content by weight (pounds per gallon or weight percent).

E27-4. Visible emissions from this source (75-0155-25) shall not exceed ten (10) percent opacity (6-minute average). Visible emissions from this source shall be determined by EPA Method 9, as published in the current 40 CFR 60, Appendix A (6 minute average).

TAPCR 1200-03-05-.03(6)

Compliance Method: The permittee shall assure compliance with the opacity standard by utilizing the opacity matrix dated June 18, 1996 that is enclosed as Attachment 2.

If the magnitude and frequency of excursions reported by the permittee in the periodic monitoring for emissions is unsatisfactory to the Technical Secretary, this permit may be reopened to impose additional opacity monitoring requirements.

E27-5. The transfer efficiency for this source was determined to be 91.15% for underbody. Performance tests may be conducted to set different operating temperatures, destruction efficiencies, capture efficiencies, and transfer efficiencies. The Division shall be given at least thirty (30) days advance notice before conducting such a performance test. The new values shall be incorporated into this permit by administrative permit amendment.

75-0155-53	Fascia Paint Line 1 Downdraft Waterwash System, and Exhaust Filters
Conditions E31-1 through E31-5 apply to source 75-0155-53.	

E31-1(SM1). Particulate matter (PM) emitted from this source (75-0155-53) shall not exceed 1.25 pounds per hour.

TAPCR 1200-03-07-.01(5) and 1200-03-09-.01(4); Application dated April 27, 2015; This limitation is part of a PSD netting analysis.

Compliance Method: The permittee shall assure compliance with the emission limitation by using control equipment and keeping records.

For the adhesion promoter spray booth and the basecoat/clearcoat spray booth, the permittee shall assure compliance with the emission limitation by using a downdraft waterwash system and keeping records. These spray booths shall not operate without the use of the downdraft waterwash system during normal operation. The permittee shall maintain a daily log indicating that the downdraft waterwash system was operating properly while the source was in operation.

E31-2(SM1). Volatile organic compounds (VOC) emitted from this source (75-0155-53) shall not exceed 200.0 tons during all intervals of 12 consecutive months.

TAPCR 1200-03-07-.07(2) and 1200-03-09-.01(4); This limitation is part of a PSD netting analysis.

Compliance Method: The permittee shall assure compliance with the emission limitation by calculating the total VOC emitted from this source during each calendar month and each interval of 12 consecutive calendar months and maintaining a log that contains the information specified in Attachment 3 of Permit #568333. The VOC content of all VOC-containing process materials used by this source shall be determined by using safety data sheets (SDS), EPA Method 24 or manufacturer/vendor formulation data which explicitly list the VOC content by weight (pounds per gallon or weight percent).

E31-3. Volatile organic compound (VOC) contents for this source (75-0155-53) shall not exceed the following limits, daily weighted average, as applied.

4.7 pounds per gallon for high bake colorcoat
4.3 pounds per gallon for high bake clearcoat
5.6 pounds per gallon for low bake colorcoat
5.1 pounds per gallon for low bake colorcoat (red and black)
4.5 pounds per gallon for low bake clearcoat
6.8 pounds per gallon for adhesion primers/promoters,

TAPCR 1200-03-18-.44(3)(a)2.(ii) and 1200-03-18-.44(3)(a)3.(iv)

Compliance Method: The permittee shall assure compliance with the VOC content limitation by calculating the daily volume weighted average mass of VOC per volume of coating as applied and maintaining a log that contains the information specified in Attachment 3. The as-applied VOC content of all VOC-containing process materials used by this source shall be determined by using safety data sheets (SDS), EPA Method 24, or manufacturer/vendor formulation data which explicitly list the VOC content by weight (pounds per gallon or weight percent).

E31-4. Visible emissions from this source (75-0155-53) shall not exhibit greater than ten percent (10%) opacity. Visible emissions from this source shall be determined by EPA Method 9, as published in the current 40 CFR 60, Appendix A (six-minute average).

TAPCR 1200-03-05-.01(3) and agreement letter dated June 15, 2011.

Compliance Method: The permittee shall assure compliance with the opacity standard by utilizing the opacity matrix dated June 18, 1996 that is enclosed as Attachment 2.

If the magnitude and frequency of excursions reported by the permittee in the periodic monitoring for emissions is unsatisfactory to the Technical Secretary, this permit may be reopened to impose additional opacity monitoring requirements.

E31-5. This source (75-0155-53) is subject to 40 CFR Part 64-Compliance Assurance Monitoring (CAM) for particulate matter. The following table summarizes the CAM requirements:

Downdraft Waterwash System

Indicator Type	Work practices.
Measurement Approach	The permittee shall maintain a log of daily inspections to document proper operation of the waterwash system. The permittee shall conduct preventative maintenance to maintain the integrity of the waterwash system.
Indicator Range/Indicator Level	An excursion is defined as a forced shutdown of coating operations due to the buildup of overspray in the coating booth.
QIP Threshold	Not applicable.
Performance Criteria: Data Representativeness	Not applicable.
Performance Criteria: Verification of Operational Status	Not applicable.
QA/QC Practices and Criteria	Not applicable.
Monitoring Frequency: Data Collection Procedures	The permittee shall maintain a daily operating log. The permittee shall maintain a copy of the manufacturer's specifications for the operation and maintenance of the spray booth process equipment and the downdraft waterwash system. The permittee shall keep a log of routine preventative maintenance and nonroutine maintenance.
Monitoring Frequency: Averaging Period	Not applicable.

75-0155-62	Fascia Paint Line 2 Waterwash and Thermal Oxidizer Control LAER
Conditions E32-1 through E32-11 apply to source 75-0155-62.	

E32-1. Particulate matter (PM) emitted from this source (75-0155-62) shall not exceed 5.6 pounds per hour and 15.8 tons during all intervals of 12 consecutive months.

TAPCR 1200-03-07-.01(5) and 1200-03-09-.01(4) PSD evaluation 5/11/89

Compliance Method: This source shall not operate without the use of the spray booth downdraft waterwash system. A daily log shall be maintained indicating that the spray booth downdraft waterwash system was operating properly while the source was in operation.

E32-2. Volatile organic compounds (VOC) emitted from this source (75-0155-62) shall not exceed a total of 388.8 tons during all intervals of 12 consecutive months for all coatings.

TAPCR 1200-03-09-.01(5) Nonattainment NSR evaluation revised 5/11/89; and 1200-03-09-.01(4) PSD Evaluation 12/21/88

Compliance Method: The permittee shall assure compliance with the emission limitation by calculating the total VOC emitted from this source during each calendar month and each interval of 12 consecutive calendar months and maintaining a log that contains the information specified in Attachment 3. The VOC content of all VOC-containing process materials used by this source shall be determined by using material safety data sheets (MSDS), EPA Method 24, or manufacturer/vendor formulation data which explicitly list the VOC content by weight (pounds per gallon or weight percent).

E32-3. Volatile organic compounds (VOC) emitted from this source (75-0155-62) shall not exceed 3,588.6 total pounds per day for coatings.

TAPCR 1200-03-09-.01(5) Nonattainment NSR evaluation revised 5/11/89

Compliance Method: The permittee shall assure compliance with the VOC emissions limitation by calculating the daily VOC emissions and maintaining a log that contains the information specified in Attachment 3. Daily VOC emissions from this source shall be based on previous testing of actual measured transfer efficiency (based on approved methods), measured oven VOC loading values (laboratory panel test), a VOC content as described in **Condition E32-2**, and previously tested incinerator VOC destruction efficiency (EPA Method 25A).

E32-4. Volatile organic compound (VOC) contents for this source (75-0155-62) shall not exceed 89.9 pounds per gallon of solids for adhesion promoter, 10.9 pounds per gallon of solids for straight shades, 11.6 pounds per gallon of solids for basecoats, and 9.17 pounds per gallon of solids for clearcoats, daily weighted average, excluding the effect of the bake oven incineration.

TAPCR 1200-03-07-.07(2) and 1200-03-09-.01(5) Nonattainment NSR evaluation revised 5/11/89

Compliance Method: The permittee shall assure compliance with the VOC coating solids limitation by calculating the daily volume weighted average mass of VOC emitted per volume of coating solids and maintaining a log that contains the information specified in Attachment 3. VOC emissions from this source shall be based on previous testing of actual measured transfer efficiency (based on approved protocol) and measured oven VOC loading values (panel test).

E32-5. Volatile organic compound (VOC) contents for this source (75-0155-62) shall not exceed the following limits, daily weighted average, as applied.

4.7 pounds per gallon for high bake colorcoat
4.3 pounds per gallon for high bake clearcoat
5.6 pounds per gallon for low bake colorcoat
5.1 pounds per gallon for low bake colorcoat (red and black)
4.5 pounds per gallon for low bake clearcoat
6.8 pounds per gallon for adhesion primers/promoters,

TAPCR 1200-03-18-.44(3)(a)2.(ii) and 1200-03-18-.44(3)(a)3.(iv)

Compliance Method: The permittee shall assure compliance with the VOC content limitation by calculating the daily volume weighted average mass of VOC per volume of coating as applied and maintaining a log that contains the information specified in Attachment 3. The as-applied VOC content of all VOC-containing process materials used by this source shall be determined by using safety data sheets (SDS), EPA Method 24, or manufacturer/vendor formulation data which explicitly list the VOC content by weight (pounds per gallon or weight percent).

E32-6. Visible emissions from this source (75-0155-62) shall not exceed ten (10) percent opacity (6-minute average). Visible emissions from this source shall be determined by EPA Method 9, as published in the current 40 CFR 60, Appendix A (6 minute average).

TAPCR 1200-03-05-.03(6)

Compliance Method: The permittee shall assure compliance with the opacity standard by utilizing the opacity matrix dated June 18, 1996 that is enclosed as Attachment 2.

If the magnitude and frequency of excursions reported by the permittee in the periodic monitoring for emissions is unsatisfactory to the Technical Secretary, this permit may be reopened to impose additional opacity monitoring requirements.

E32-7. All coatings shall be applied utilizing robotic electrostatic spray or an equivalent alternative technology, followed by hand (manual) electrostatic spray or an equivalent alternative technology, as necessary for product quality. If an alternative technology is to be employed, then compliance with the equivalence requirements shall be demonstrated by the source through comparison of performance data obtained during appropriate transfer efficiency testing. Not later than 90 days after employing an equivalent alternative technology, the owner or operator shall submit an acceptable report of a transfer efficiency test which demonstrates, using accepted protocol, that the transfer efficiency is at least equivalent to that of the robotic electrostatic spray.

TAPCR 1200-03-09-.01(4) PSD evaluation 5/11/89

Compliance Method: Annual Certification of Compliance

E32-8. The permittee shall continuously (i.e., a minimum of once every fifteen minutes) record the incinerator combustion temperature during coating operations for thermal incineration during coating operations. The permittee shall report in accordance with **Condition E2** as follows: every three-hour period shall be reported during which the average temperature measured for the thermal incinerator(s) is more than 28°C (50°F) less than the average temperature during a validated control device performance test at which the destruction efficiency was determined. If no such periods occur, the permittee shall submit a negative report.

TAPCR 1200-03-18-.03(5)(b)9.

E32-9. The bake ovens for this operation shall each be equipped with an exhaust incinerator which, as proven by appropriate testing:
(a) Achieves a minimum VOC destruction efficiency of 95 percent; and
(b) Treats all air exhausted from the bake oven.

TAPCR 1200-03-09-.01(5) Nonattainment NSR evaluation revised 5/11/89.

E32-10. The permittee shall keep a list of the current transfer efficiencies for this source. The VOC capture efficiency has been determined to be as follows:

System 3	Capture Efficiency
Booth 1 - AdPro	4.91%
Booth 1 - Paint	7.85%
Booth 1 - Clear	12.21%
Booth 2 - AdPro	4.68%
Booth 2 - Paint	9.26%
Booth 2 - Clear	20.75%

Performance testing showed the operating temperatures and destruction efficiencies as follows:

Description	Operating Temperature of Exhaust Oxidizer	Destruction Efficiency
Fascia Paint Line 2 - Oven 1	1,351°F	98.2%
Fascia Paint Line 2 - Oven 2	1,351°F	99.5%

Performance tests may be conducted to set different operating temperatures, destruction efficiencies, capture efficiencies, and transfer efficiencies. The Division shall be given at least thirty (30) days advance notice before conducting destruction efficiency performance test. Capture efficiency and transfer efficiency performance testing may be conducted without notification and all records shall be maintained on site. The new values shall be incorporated into this permit by administrative permit amendment.

E32-11. This source (75-0155-62) is subject to 40 CFR Part 64-Compliance Assurance Monitoring (CAM) for particulate matter. The following table summarizes the CAM requirements:

Downdraft Waterwash System

Indicator Type	Work practices.
Measurement Approach	The permittee shall maintain a log of daily inspections to document proper operation of the waterwash system. The permittee shall conduct preventative maintenance to maintain the integrity of the waterwash system.
Indicator Range/Indicator Level	An excursion is defined as a forced shutdown of coating operations due to the buildup of overspray in the coating booth.
QIP Threshold	Not applicable.
Performance Criteria: Data Representativeness	Not applicable.
Performance Criteria: Verification of Operational Status	Not applicable.
QA/QC Practices and Criteria	Not applicable.
Monitoring Frequency: Data Collection Procedures	The permittee shall maintain a daily operating log. The permittee shall maintain a copy of the manufacturer's specifications for the operation and maintenance of the spray booth process equipment and the downdraft waterwash system. The permittee shall keep a log of routine preventative maintenance and nonroutine maintenance.
Monitoring Frequency: Averaging Period	Not applicable.

75-0155-51	Paint Line 1 Body E-Coat Line, Sealer and Stoneguard Line, Functional Primer Coating Lines, Topcoat Coating Lines, Touch-up, Cavity Wax and Underbody. Two Regenerative Thermal Oxidizers, Exhaust Filters, Downdraft Waterwash System. NSPS (Subpart MM), NESHAP (Subpart IIII)
Conditions E35-1 through E35-16 apply to source 75-0155-51.	

E35-1. Particulate matter (PM) emitted from this source (75-0155-51) (excluding Lab 1 Coating Test Booth, Training Center Spray Booth, and Training Center Touch Up Booth) shall not exceed 1.33 pounds per hour.

TAPCR 1200-03-07-.01(5) and 1200-03-09-.01(4); This limitation is part of a PSD netting analysis.

Compliance Method: The permittee shall assure compliance with the emission limitation by using control equipment and keeping records.

For the Stoneguard Booth (which is part of the Sealers and Stoneguard Line) and the Cavity Wax and Underbody, the permittee shall assure compliance with the emission limitation by using exhaust filters and keeping records. These coating lines shall not operate without the use of exhaust filters during normal operation. The permittee shall keep a log denoting the actual day(s) that filters were replaced.

For the Functional Primer Coating Lines and the Topcoat Coating Lines, the permittee shall assure compliance with the emission limitation by using a downdraft waterwash system, exhaust filters, and keeping records. These coating lines shall not operate without the use of the downdraft waterwash system and exhaust filters during normal operation. The permittee shall maintain a daily log indicating that the downdraft waterwash system was operating properly while the source was in operation. The permittee shall keep a log denoting the actual day(s) that filters were replaced.

E35-2. Volatile organic compounds (VOC) emitted from this source (75-0155-51) shall not exceed 550.0 tons during all intervals of 12 consecutive months.

TAPCR 1200-03-07-.07(2) and 1200-03-09-.01(4); This limitation is part of a PSD netting analysis.

Compliance Method: The permittee shall assure compliance with the emission limitation by calculating the total VOC emitted from this source during each calendar month and each interval of 12 consecutive calendar months and maintaining a log that contains the information specified in Attachment 3. The permittee shall clearly indicate whether the VOC emissions are controlled by an RTO or not. The VOC content of all VOC-containing process materials used by this source shall be determined by using material safety data sheets (MSDS), EPA Method 24 or manufacturer/vendor formulation data which explicitly list the VOC content by weight (pounds per gallon or weight percent).

Paint Line 1 Body E-Coat Line. Conditions E35-3 and E35-4 apply to the Paint Line 1 Body E-Coat Line.

E35-3(MM4). Volatile organic compounds (VOC) emitted from the Paint Line 1 Body E- Coat Line shall not exceed 0.16 kilograms per liter of solids applied (1.34 pounds per gallon of solids applied).

TAPCR 1200-03-16-.34(3)(a)

Compliance Method: The permittee shall assure compliance with the VOC coating solids applied limitation by calculating the monthly volume weighted average mass of VOC emitted per volume of applied coating solids and maintaining a log that contains the information specified in Attachment 3. VOC emissions from this source shall be based on VOC contents (as described in **Condition E35-2)**; transfer efficiency (which was determined to be 100% per 40 CFR §63.3161(g)); capture efficiency (which was determined by mass balance to be 70% based on PPG Data and Industry Standard; and VOC destruction efficiency of the Paint Line 1 regenerative thermal oxidizers (RTO's).

E35-4(MM4). Volatile organic compounds (VOC) emitted from the Paint Line 1 Body E-Coat Line shall not exceed 0.17 kilograms per liter of solids applied (1.4 pounds per gallon of solids applied).

40 CFR §60.392(a)(1)(i) and TAPCR 1200-03-18-.11(3)(a)3.

Compliance Method: The permittee shall assure compliance with the emission limitation in **Condition E35-4** by assuring compliance with the emission limitation in **Condition E35-3**.

Paint Line 1 Functional Primer Coating Lines. Conditions E35-5 and E35-6 apply to the Paint Line 1 Functional Primer Coating Lines.

E35-5(MM4). Volatile organic compounds (VOC) emitted from the guide coat operation (which is part of the Paint Line 1 Functional Primer Coating Lines) shall not exceed 1.40 kilograms per liter of solids applied (11.69 pounds per gallon of solids applied).

TAPCR 1200-03-16-.34(3)(b) and 40 CFR §60.392(b)

Compliance Method: The permittee shall assure compliance with the VOC coating solids applied limitation by calculating the monthly volume weighted average mass of VOC emitted per volume of applied coating solids after the control device and maintaining a log that contains the information specified in Attachment 3. VOC emissions from this source shall be based on transfer efficiencies listed in 40 CFR 60, Subpart MM; measured oven VOC loading values (laboratory panel test); VOC contents as described in **Condition E35-2;** and VOC destruction efficiency of the Paint Line 1 regenerative thermal oxidizers.

E35-6(MM4). Volatile organic compounds (VOC) emitted from the Paint Line 1 Functional Primer Coating Lines shall not exceed 1.8 kilograms per liter of solids applied (15.1 pounds per gallon of solids applied), on any day. Alternatively, the VOC content shall not exceed 0.34 kilograms per liter (2.8 pounds per gallon) of coating, excluding water and/or exempt compounds, as applied.

TAPCR 1200-03-18-.11(3)(b)1. and 2.

Compliance Method: The permittee shall assure compliance with the VOC limitations by (one of the following):

(a) not exceeding the emission limit of 1.8 kilograms per liter of solids applied (15.1 pounds per gallon of solids applied), on any day. The permittee shall calculate the daily volume weighted average mass of VOC emitted per volume of applied coating solids (before the control device) and maintain a daily log.

(b) not applying coatings whose VOC content (before the control device) exceeds 0.34 kilograms per liter (2.8 pounds per gallon) of coating, excluding water and/or exempt compounds, as applied. The permittee shall maintain a monthly log of the VOC content of each coating, excluding water and/or exempt compounds, as applied.

(c) not applying coatings, during any day, whose volume weighted average VOC content (before the control device) exceeds 0.34 kilograms per liter (2.8 pounds per gallon) of coating, excluding water and/or exempt compounds, as applied. The permittee shall calculate the daily volume weighted average VOC content, excluding water and/or exempt compounds, as applied, and maintain a daily log.

(d) installing and operating a capture system and a control device. The permittee shall determine for each day the overall emission reduction efficiency needed to demonstrate compliance. The overall emission reduction needed is the lesser of the value calculated according to the procedure in TAPCR 1200-03-18 or 95 percent (95%). The permittee shall maintain a daily log and demonstrate each day that the overall emission reduction efficiency achieved is greater than or equal to the overall emission reduction efficiency required.

VOC emissions from Paint Line 1 Functional Primer Coating Lines shall be based on transfer efficiencies listed in 40 CFR 60, Subpart MM; measured oven VOC loading values (laboratory panel test); VOC contents as described in **Condition E35-2;** and VOC capture and destruction efficiency of the Paint Line 1 regenerative thermal oxidizers (RTO's). The permittee shall maintain a log that contains the information specified in Attachment 3.

Paint Line 1 Topcoat Coating Lines and Touchup. Conditions E35-7 through E35-11 apply to the Paint Line 1 Topcoat Coating Lines and Touchup.

E35-7. Particulate matter (PM) emitted from the Lab 1 Coating Test Booth shall not exceed 3.43 pounds per hour.

TAPCR 1200-03-07-.04(1) and 1200-03-09-.01(4) PSD evaluation revised 6/30/83

Compliance Method: This source shall not operate without the use of the spray booth sidedraft waterwash system. A daily log shall be maintained indicating that the spray booth downdraft waterwash system was operating within the manufacturer's recommended operating parameters while the source was in operation.

E35-8. Particulate matter (PM) emitted from the Training Center Spray Booth shall not exceed 4.11 pounds per hour.

TAPCR 1200-03-07-.04(1) and 1200-03-09-.01(4) PSD evaluation revised 6/30/83

Compliance Method: The permittee shall assure compliance with the emission limitation by using exhaust filters and keeping records. This source shall not operate without the use of exhaust filters during normal operation. The permittee shall keep a log denoting the actual day(s) that filters were replaced.

E35-9. Particulate matter (PM) emitted from the Training Center Touch Up Booth shall not exceed 1.46 pounds per hour.

TAPCR 1200-03-07-.04(1) and 1200-03-09-.01(4) PSD evaluation revised 6/30/83

Compliance Method: The permittee shall assure compliance with the emission limitation by using exhaust filters and keeping records. This source shall not operate without the use of exhaust filters during normal operation. The permittee shall keep a log denoting the actual day(s) that filters were replaced.

E35-10. Volatile organic compounds (VOC) emitted from the Paint Line 1 Topcoat Coating Lines and Touch-up Booths shall not exceed 1.47 kilograms per liter of solids applied (12.28 pounds per gallon of solids applied).

TAPCR 1200-03-16-.34(3)(c) and 40 CFR 60.392(c)

Compliance Method: The permittee shall assure compliance with the VOC coating solids applied limitation by calculating the monthly volume weighted average mass of VOC emitted per volume of applied coating solids and maintaining a log that contains the information specified in Attachment 3. VOC emissions from this source shall be based on transfer efficiencies listed in 40 CFR 60, Subpart MM; measured oven VOC loading values (laboratory panel test); VOC contents as described in **Condition 35-2;** and VOC destruction efficiency of the Paint Line 1 regenerative thermal oxidizers (RTO's).

E35-11(MM4). Volatile organic compounds (VOC) emitted from the Paint Line 1 Topcoat Coating Lines and Touch-up Booths shall not exceed 1.8 kilograms per liter of solids applied (15.1 pounds per gallon of solids applied), on any day. Alternatively, the VOC content shall not exceed 0.34 kilograms per liter (2.8 pounds per gallon) of coating, excluding water and/or exempt compounds, as applied.

TAPCR 1200-03-18-.11(3)(b)1. and 2.

Compliance Method: The permittee shall assure compliance with the VOC limitations by (one of the following):

(a) not exceeding the emission limit of 1.8 kilograms per liter of solids applied (15.1 pounds per gallon of solids applied), on any day. The permittee shall calculate the daily volume weighted average mass of VOC emitted per volume of applied coating solids (before the control device) and maintain a daily log.

(b) not applying coatings whose VOC content (before the control device) exceeds 0.34 kilograms per liter (2.8 pounds per gallon) of coating, excluding water and/or exempt compounds, as applied. The permittee shall maintain a monthly log of the VOC content of each coating, excluding water and/or exempt compounds, as applied.

(c) not applying coatings, during any day, whose volume weighted average VOC content (before the control device) exceeds 0.34 kilograms per liter (2.8 pounds per gallon) of coating, excluding water and/or exempt compounds, as applied. The permittee shall calculate the daily volume weighted average VOC content, excluding water and/or exempt compounds, as applied, and maintain a daily log.

(d) installing and operating a capture system and a control device. The permittee shall determine for each day the overall emission reduction efficiency needed to demonstrate compliance. The overall emission reduction needed is the lesser of the value calculated according to the procedure in TAPCR 1200-03-18 or 95 percent (95%). The permittee shall maintain a daily log and demonstrate each day that the overall emission reduction efficiency achieved is greater than or equal to the overall emission reduction efficiency required.

VOC emissions from Paint Line 1 Topcoat Coating Lines and Touch-up Booths shall be based on transfer efficiencies listed in 40 CFR 60, Subpart MM; measured oven VOC loading values (laboratory panel test); VOC contents as described in **Condition E35-2;** and VOC capture and destruction efficiency of the Paint Line 1 regenerative thermal oxidizers (RTO's). The permittee shall maintain a log that contains the information specified in Attachment 3.

E35-12. The permittee shall comply with the monitoring requirements specified in the compliance method below.

TAPCR 1200-03-16-.34(5), 1200-03-18-.11(5)(b)2., and 40 CFR §60.394

Compliance Method: The permittee shall install, calibrate, maintain, and operate temperature measurement devices as prescribed below:

(a) A temperature measurement device shall be installed in the firebox.
(b) Each temperature measurement device shall be installed, calibrated, and maintained according to accepted practice and the manufacturer's specifications. The device shall have an accuracy of the greater of ±5 percent of the temperature being measured expressed in degrees Celsius or ±2.5 °C.
(c) Each temperature measurement device shall be equipped with a recording device so that a permanent record is produced.

E35-13. The permittee shall comply with the reporting and recordkeeping requirements specified in the compliance method below.

TAPCR 1200-03-16-.34(6), 1200-03-18-.11(8)(e), 40 CFR §60.395, 40 CFR §63.3167(a)

Compliance Method: The permittee shall identify, record, and submit a written report every calendar quarter (postmarked not later than thirty (30) days after the end of the calendar quarter) of each instance in which the volume weighted average of the total mass of VOC's emitted to the atmosphere per volume of applied coating solids is greater than the limit specified in **Conditions E35-3, E35-4, E35-5, E35-6, E35-10, and E35-11**. If no such instances have occurred during a particular quarter, a report stating this shall be submitted in accordance with **Condition E2**. Where compliance is achieved through the use of a capture system and control device, the volume weighted average after the control device should be reported.

For each regenerative thermal oxidizer (RTO), the permittee shall maintain each 3-hour average temperature above the minimum temperature established during the performance test. The permittee shall continuously (i.e., a minimum of once every fifteen minutes) monitor the combustion temperature of the central retention chambers. The permittee shall record the average temperature for each 3-hour period. The permittee shall report all 3-hour average temperatures that are below the minimum temperature established during the performance test. If no such periods occur, the permittee shall submit a negative report.

E35-14. Visible emissions from this source (75-0155-51) shall not exhibit greater than ten percent (10%) opacity. Visible emissions from this source shall be determined by EPA Method 9, as published in the current 40 CFR 60, Appendix A (six-minute average).

TAPCR 1200-03-05-.01(3) and agreement letter dated July 7, 2010.

Compliance Method: The permittee shall assure compliance with the opacity standard by utilizing the opacity matrix dated June 18, 1996 that is enclosed as Attachment 2 of this permit.

If the magnitude and frequency of excursions reported by the permittee in the periodic monitoring for emissions is unsatisfactory to the Technical Secretary, this permit may be reopened to impose additional opacity monitoring requirements.

E35-15. The transfer efficiencies for this source were determined to be: 100% for E-Coat, 65.10% for Prime, 79.52% for Basecoat, and 74.24% for Clearcoat. The VOC capture efficiency for the Clearcoat booths and Topcoat oven was determined to be 100% since there is a permanent total enclosure (PTE). Based on a panel test, the capture efficiencies for this source were determined to be: 3.38% for Basecoat and 2.05% for Prime. The VOC capture efficiency for the E-Coat oven is 70%. Performance testing showed the operating temperatures and destruction efficiencies as follows:

Description	Operating Temperature of Exhaust Oxidizer	Destruction Efficiency
RTO #1	1,551º F	98.1%
RTO #2	1,552º F	98.1%

Performance tests may be conducted to set different operating temperatures, destruction efficiencies, capture efficiencies, and transfer efficiencies. The new values shall be incorporated into this permit by administrative permit amendment.

E35-16. This source (75-0155-51) is subject to 40 CFR Part 64-Compliance Assurance Monitoring (CAM) for particulate matter. The following table summarizes the CAM requirements:

Downdraft Waterwash System

Indicator Type	Work practices. Circulation tank water level.
Measurement Approach	The permittee shall conduct preventative maintenance to maintain the integrity of the waterwash system. The water level in the circulation tank is an indicator of proper operation of the downdraft waterwash system.
Indicator Range/Indicator Level	An excursion is defined as a forced shutdown of coating operations due to a low water level in the downdraft waterwash circulation tank.
QIP Threshold	Not applicable.
Performance Criteria: Data Representativeness	Not applicable.
Performance Criteria: Verification of Operational Status	Not applicable.
QA/QC Practices and Criteria	The permittee shall test the low level alarm annually to ensure proper operation.
Monitoring Frequency: Data Collection Procedures	The permittee shall continuously monitor the water level in the downdraft waterwash circulation tank. The water level will be displayed in the paint control room. The downdraft waterwash tank level has an interlock that will shut down the painting operation on a low level alarm. The permitee shall maintain an alarm log. Any forced shutdown for a low water level alarm will be treated as an excursion of the monitoring requirements and documented accordingly. The permittee shall maintain a copy of the manufacturer's specification for the operation and maintenance of the spray booth process equipment and the downdraft waterwash system. The permittee shall keep a log of routine preventative maintenance and non-routine maintenance.
Monitoring Frequency: Averaging Period	Not applicable.

Stoneguard Process

Indicator Type	Work practices.
Measurement Approach	The permittee shall conduct maintenance and preventative maintenance to maintain the exhaust filter system.
Indicator Range/Indicator Level	An excursion is defined as a forced shutdown of coating operations due to the buildup of overspray in the spray booth.
QIP Threshold	Not applicable.
Performance Criteria: Data Representativeness	Not applicable.
Performance Criteria: Verification of Operational Status	Not applicable.
QA/QC Practices and Criteria	Not applicable.
Monitoring Frequency: Data Collection Procedures	The permittee shall perform a visual inspection or a differential pressure reading across the exhaust filters on a daily basis. The permittee shall maintain a copy of the manufacturer's specifications for the operation and maintenance of the exhaust filters. The permittee shall keep a log of required maintenance and routine preventative maintenance performed on the exhaust filter system. The permittee shall keep a log of daily inspections or differential pressure readings and the actual dates that filters were replaced.
Monitoring Frequency: Averaging Period	Not applicable.

75-0155-72	Service Parts E-Coat Line, including Battery Cases LAER, NSPS Thermal Oxidizer Control
Conditions E41-1 through E41-7 apply to source 75-0155-72.	

E41-1. Volatile Organic Compounds (VOCs) emitted from this source (75-0155-72) shall not exceed 20.0 tons during all intervals of 12 consecutive months.

TAPCR 1200-03-07-.07(2) and 1200-03-09-.01(4); This limitation is part of a PSD netting analysis.

Compliance Method: The permittee shall assure compliance with the emission limitation by calculating the total VOC emitted from this source during each calendar month and each interval of 12 consecutive calendar months and maintaining a log that contains the information specified in Attachment 3. The VOC content of all VOC-containing process materials used by this source shall be determined by using material safety data sheets (MSDS), EPA Method 24, or manufacturer/vendor formulation data which explicitly list the VOC content by weight (pounds per gallon or weight percent).

E41-2. Volatile Organic Compounds (VOCs) emitted from this source (75-0155-72) shall not exceed 0.51 pounds per gallon of solids applied (monthly weighted average).

TAPCR 1200-03-09-.01(5) Nonattainment NSR evaluation 5/11/89

Compliance Method: The permittee shall assure compliance with the VOC coating solids applied limitation by calculating the monthly volume weighted average mass of VOC emitted per volume of applied coating solids and maintaining a log that contains the information specified in Attachment 3. VOC emissions from this source shall be based on the VOC content (as described in **Condition E41-1**); transfer efficiency (which was determined to be 100% per 40 CFR §63.3161(g)); capture efficiency (which was determined by mass balance to be 70% based on PPG Data and Industry Standard; and VOC destruction efficiency of the thermal oxidizers (EPA Method 25A).

E41-3. Volatile Organic Compounds (VOCs) emitted from this source (75-0155-72) shall not exceed 0.16 kilograms per liter of solids applied (1.33 pounds per gallon of solids applied).

TAPCR 1200-03-16-.34(3)(a)

Compliance Method: The permittee shall assure compliance with the emission limitation in **Condition E41-3** by assuring compliance with the emission limitation in **Condition E41-2**.

E41-4. Volatile Organic Compounds (VOCs) emitted from this source (75-0155-72) shall not exceed 0.17 kilograms per liter of solids applied (1.42 pounds per gallon of solids applied).

40 CFR §60.392(a)(1)(i) and TAPCR 1200-03-18-.11(3)(a)3.

Compliance Method: The permittee shall assure compliance with the emission limitation in **Condition E41-4** by assuring compliance with the emission limitation in **Condition E41-2**.

E41-5. The permittee shall comply with the reporting and recordkeeping requirements specified in the compliance method below.

TAPCR 1200-03-16-.34(6), 1200-03-18-.11(8)(e), 40 CFR §60.395,and 40 CFR §63.3167(a)

Compliance Method: The permittee shall identify, record, and submit a written report every calendar quarter (postmarked not later than thirty (30) days after the end of the calendar quarter) of each instance in which the volume weighted average of the total mass of VOC's emitted to the atmosphere per volume of applied coating solids is greater than the limit specified in **Conditions E41-2, E41-3, and E41-4.** If no such instances have occurred during a particular quarter, a report stating this shall be submitted in accordance with **Condition E2**. Where compliance is achieved through the use of a capture system and control device, the volume weighted average after the control device should be reported.

The permittee shall continuously (i.e., a minimum of one every fifteen minutes) record the incinerator combustion temperature during coating operations for thermal incineration during coating operations. The permittee shall report in accordance with **Condition E2** of this permit as follows: every three-hour period shall be reported during which the average temperature measured for the thermal incinerator(s) is more than 28°C (50°F) less than the average temperature during the most recent control device performance test at which the destruction efficiency was determined. If no such periods occur, the permittee shall submit a negative report.

The permittee shall keep the combustion temperature set point on the thermal oxidizer no lower than 14°C (25°F) below the lower of that set point during the performance test for that thermal oxidizer and the average combustion temperature maintained during the performance test for that thermal oxidizer.

E41-6. The transfer efficiency for this source was determined to be 100% (per 40 CFR §63.3161(g)) The capture efficiency for this source was determined by mass balance to be 70% (Based on PPG Data and Industry Standard). Performance testing showed the operating temperatures and destruction efficiencies as follows:

Description	Operating Temperature of Exhaust Oxidizer	Destruction Efficiency
Service Parts E-Coat Line	1,100°F	81.0%
Service Parts E-Coat Line	1,224°F	92.4%

Performance tests may be conducted to set different operating temperatures, destruction efficiencies, capture efficiencies, and transfer efficiencies. The Division shall be given at least thirty (30) days advance notice before conducting such a performance test. The new values shall be incorporated into this permit by administrative permit amendment.

E41-7. Visible emissions from this source (75-0155-72) shall not exceed ten (10) percent opacity (6-minute average). Visible emissions from this source shall be determined by EPA Method 9, as published in the current 40 CFR 60, Appendix A (6 minute average).

TAPCR 1200-03-05-.03(6)

Compliance Method: The permittee shall assure compliance with the opacity standard by utilizing the opacity matrix dated June 18, 1996 that is enclosed as Attachment 2.

If the magnitude and frequency of excursions reported by the permittee in the periodic monitoring for emissions is unsatisfactory to the Technical Secretary, this permit may be reopened to impose additional opacity monitoring requirements.

75-0155-33	Battery Assembly Electrolyte Filling and Degassing Two Regenerative Thermal Oxidizers (RTO's)
Conditions E43-1 through E43-2 apply to source 75-0155-33.	

E43-1(AA1). Volatile organic compounds (VOCs) emitted from this source (75-0155-33) shall not exceed 40.7 tons during all intervals of 12 consecutive months.

TAPCR 1200-03-07-.07(2) and 1200-03-09-.01(4); This limitation is part of a PSD netting analysis.

Compliance Method: The permittee shall assure compliance with the emission limitation by calculating the total VOC emitted from this source during each calendar month and each interval of 12 consecutive calendar months and maintaining a log that contains the information specified in Attachment 3. Depending on the electrolyte formulation, the permittee is able to comply with the VOC limitation without utilizing the RTO's. Therefore, the permittee may choose to operate this source without the RTO's provided the VOC emissions are below the VOC limitation. If the regenerative thermal oxidizers are not operating, then the destruction efficiency shall be listed as 0% for those time periods, and the permittee does not have to monitor the combustion temperature and static pressure. The permittee shall use an emission factor of 0.30% for the electrolyte filling and 0.10% for degassing for the BCR EV Battery. These emission factors are based on measurements from actual operation at Nissan North America, Inc., Smyrna, TN during a test conducted on December 5, 2013. The permittee shall use an emission factor of 0.30% for the electrolyte filling and 0.10% for degassing for the HC1 EV Battery. These emission factors are based on measurements from actual operation at Nissan North America, Inc., Smyrna, TN during a test conducted on February 18, 2015. The permittee may conduct a performance test to redefine the emission factors for this source.

The permittee shall keep the combustion temperature set point on each regenerative thermal oxidizer (RTO) no lower than 1451°F. The permittee shall continuously (i.e., a minimum of once every fifteen minutes) monitor the combustion temperature of the central retention chambers. The permittee shall record the average temperature for each 3-hour period. In accordance with **Condition E2**, the permittee shall report all 3-hour average temperatures that are more than 28°C (50°F) less than 1451°F.

The performance test on March 19, 2013, determined the following results:

Device	Combustion Temperature	Capture Efficiency	Destruction Efficiency
Battery Plant RTO	1451°F	70%	37%

E43-2(AA1). This source (75-0155-33) is subject to 40 CFR Part 64-Compliance Assurance Monitoring (CAM) for volatile organic compounds. Depending on the electrolyte formulation, the permittee is able to comply with the VOC limitation in **Condition E43-1(AA1)** without utilizing the RTO's. Therefore, the permittee may choose to operate this source without the RTO's provided the VOC emissions are below the VOC limitation in **Condition E43-1(AA1)**. If the regenerative thermal oxidizers are not operating, then the destruction efficiency shall be listed as 0% for those time periods, and the permittee does not have to monitor the combustion temperature and static pressure. The following table summarizes the CAM requirements:

Indicator Type	Combustion chamber temperature and RTO bypass damper position.
Measurement Approach	The permittee shall monitor the combustion chamber temperature with thermocouples. The permittee shall monitor the RTO bypass damper position as open or closed.
Indicator Range/Indicator Level	RTO bypass damper position closed indicates that the RTO is in operation. RTO bypass damper position open indicates that the RTO is operating in bypass mode. Except when the RTO is operating in bypass mode, the permittee shall keep the combustion temperature set point on each regenerative thermal oxidizer (RTO) no lower than 1451°F. Except when the RTO is operating in bypass mode, the permittee shall report (as a excursion) all 3-hour average temperatures that are more than 28°C (50°F) less than1451°.
QIP Threshold	The QIP threshold is defined as temperature deviations exceeding 5% of the operating time.
Performance Criteria: Data Representativeness	Thermocouples shall be located in various locations throughout the combustion chamber and shall be installed and calibrated pursuant to the manufacturer's specifications. The thermocouples shall have an accuracy of the greater of ±0.75% of the temperature being measured in degrees Celsius, or ±2.5°C. A data acquisition system shall be used so that a permanent record is available.
Performance Criteria: Verification of Operational Status	The permittee shall annually check the thermocouple against a standard or annually replace the thermocouple.
QA/QC Practices and Criteria	The permittee shall retest the RTO's once every five years to verify VOC destruction efficiency.
Monitoring Frequency: Data Collection Procedures	The permittee shall continuously record (i.e., once every 15 minutes or four equally-spaced readings per hour) the combustion temperature and RTO bypass damper position through the use of a data acquisition system. When the process is operating and the RTO is not operating (i.e., open RTO bypass damper position), calculations of uncontrolled emissions shall be performed and included in the 12-month rolling total. The permittee shall maintain a copy of the manufacturer's specification for the operation and maintenance of the RTO's. The permittee shall keep a log of required maintenance and routine preventative maintenance activities.
Monitoring Frequency: Averaging Period	The permittee shall continuously record (i.e., once every 15 minutes or four equally-spaced readings per hour) the combustion temperature. The permittee shall average the readings over a 3-hour period.

E43-2(AA1). (continued)

Indicator Type	Static pressure monitoring in RTO duct work in each injection and degas line to indicate capture efficiency.
Measurement Approach	Static pressure is monitored with pressure sensors.
Indicator Range/Indicator Level	Capture is indicated by the daily duct static pressure for each line between a capture device (i.e., line exhaust duct) and the RTO inlet when the RTO bypass damper position is closed. Except when the RTO is operating in bypass mode, the permittee shall report (as a excursion) daily static pressure readings that are 20 percent below the average duct static pressure. During the performance test on March 19, 2013, the average duct static pressure was measured at 0.16 inches of water for injection and 0.35 inches of water for degas. Therefore, except when the RTO is operating in bypass mode, the permittee shall report (as an excursion) daily static pressure readings that are below 0.13 inches of water for injection and 0.28 inches of water for degas. For each excursion, the permittee shall conduct a process review to confirm that an excursion has occurred (e.g., a check is performed for false readings, lost data, or faulty equipment). If there is an excursion, NNA will record it and, if appropriate, initiate corrective action. If a static pressure of 20 percent below the performance test value cannot be corrected within a 24 hour period, it will be considered an excursion, the emissions from that duct will be considered uncontrolled until the issue is repaired, and daily emissions for that line will be calculated as uncontrolled. If the static pressure is not reestablished within the 24 hour period then emissions during that period will be calculated as uncontrolled.
QIP Threshold	The QIP threshold is defined as static pressure reading deviations exceeding 5% of the operating days during the reporting period.
Performance Criteria: Data Representativeness	Static pressure sensors will be placed in each line between a capture device (i.e., line exhaust duct) and the RTO inlet and will be installed, verified, calibrated, and/or replaced pursuant to the manufacturer's specifications. A data acquisition system is used so that a permanent record is available.
Performance Criteria: Verification of Operational Status	Annual
QA/QC Practices and Criteria	The permittee shall retest the RTO's once every five years to verify VOC capture/destruction efficiency.
Monitoring Frequency: Data Collection Procedures	When the RTO bypass damper position is closed, the permittee shall record the duct static pressure daily through the use of a data acquisition system. The permittee shall maintain a copy of the manufacturer's specification for the operation and maintenance of the static pressure indicators. The permittee shall keep a log of required maintenance and routine preventative maintenance activities.
Monitoring Frequency: Averaging Period	Not applicable.

75-0155-37	Two Diesel-Fired Emergency Reciprocating Internal Combustion Engines with Generators for Battery Assembly Plant. NSPS (Subpart IIII), NESHAP (Subpart ZZZZ)
Conditions E44-1 through E44-22 apply to source 75-0155-37.	

E44-1. This source is subject to the Standards of Performance for Stationary Compression Ignition Internal Combustion Engines (40 CFR Part 60, Subpart IIII). The permittee shall comply with 40 CFR Part 60, Subpart IIII upon startup.

E44-2. This source is subject to the National Emission Standards for Hazardous Air Pollutants for Stationary Reciprocating Internal Combustion Engines (40 CFR Part 63, Subpart ZZZZ). The permittee shall comply with 40 CFR Part 63, Subpart ZZZZ upon startup.

E44-3. The maximum power output for each engine shall not exceed 700 kilowatts (700 kW). The maximum power output for this source (both engines) shall not exceed 1400 kilowatts (1400 kW).

E44-4. The maximum hours of operation for this source (both engines) shall not exceed 856 hours during all intervals of twelve (12) consecutive months. This limitation is established pursuant to the information contained in the application dated April 29, 2011, from the permittee.

Compliance Method: The permittee shall assure compliance with this limitation by maintaining a log of the monthly hours of operation and calculating the hours of operation during all intervals of 12 consecutive months.

Month, Year	Hours of Operation for BA-08-P5 (hours/month)	Hours of Operation for BA-08-P6 (hours/month)	Hours of Operation for both Generators (hours/month)	Hours of Operation for both Generators (hours/12 consecutive months)
January				
February				
Etc.				
December				

The Hours per 12 consecutive month value is the sum of the Hours of Operation in the 11 months preceding the month just completed + the Hours of Operation in the month just completed. If data is not available for the 11 months preceding the initial use of this table, this value will be equal to the value for Hours of Operation.

E44-5. Only No. 2 fuel oil and diesel fuel shall be used as fuels for this source.

E44-6. Particulate Matter (TSP) emitted from this source (75-0155-37) shall not exceed 0.20 grams per kilowatt-hour (0.62 lb/hr) and 0.13 tons during all intervals of 12 consecutive months.

40 CFR §60.4205(b) and 1200-03-09-.01(4); This limitation is part of a PSD netting analysis.

Compliance Method: The permittee shall assure compliance with this emission limitation by assuring compliance with **Conditions E44-3, E44-4, E44-12, E44-15, and E44-16.**

E44-7. Sulfur Dioxide (SO_2) emitted from this source (75-0155-37) shall not exceed 0.04 pounds per hour and 0.009 tons during all intervals of 12 consecutive months.

TAPCR 1200-03-14-.03(5)

Compliance Method: The permittee shall assure compliance with this emission limitation by assuring compliance with **Conditions E44-3, E44-4, and E44-13.** Compliance with this emission limitation is based on an emission factor of 0.0015 pounds of SO_2 per million British Thermal Units (EPA AP-42, Section 3.4, October 1996).

E44-8. Carbon Monoxide (CO) emitted from this source (75-0155-37) shall not exceed 3.5 grams per kilowatt-hour (10.8 lb/hr) and 2.3 tons during all intervals of 12 consecutive months.

40 CFR §60.4205(b)

Compliance Method: The permittee shall assure compliance with this emission limitation by assuring compliance with **Conditions E44-3, E44-4, E44-12, E44-15, and E44-16.**

E44-9. Volatile Organic Compounds (VOCs) emitted from this source (75-0155-37) shall not exceed 1.32 pounds per hour and 0.28 tons during all intervals of 12 consecutive months.

TAPCR 1200-03-07-.07(2) and 1200-03-09-.01(4); This limitation is part of a PSD netting analysis.

Compliance Method: The permittee shall assure compliance with this emission limitation by assuring compliance with **Conditions E44-3 and E44-4.** Compliance with this emission limitation is based on an emission factor of 0.000705 pounds of VOC per horsepower-hour (EPA AP-42, Section 3.4, October 1996).

E44-10. Non-Methane Hydrocarbons and Nitrogen Oxides (NMHC + NO_X) emitted from this source (75-0155-37) shall not exceed 6.4 grams per kilowatt-hour (19.76 lb/hr) and 4.2 tons during all intervals of 12 consecutive months.

40 CFR §60.4205(b) and 1200-03-09-.01(4); This limitation is part of a PSD netting analysis.

Compliance Method: The permittee shall assure compliance with this emission limitation by assuring compliance with **Conditions E44-3, E44-4, E44-12, E44-15, and E44-16.**

E44-11. Visible emissions from this source (75-0155-37) shall not exceed the following:

a) Twenty percent (20%) opacity during the acceleration mode;
b) Fifteen percent (15%) opacity during the lugging mode; and
c) Fifty percent (50%) opacity during the peaks in either the acceleration or lugging modes.

The engine manufacturer is responsible for testing. Opacity levels are to be measured and calculated as set forth in 40 CFR part 86, subpart I. Notwithstanding the provisions of 40 CFR part 86, subpart I, two-cylinder nonroad engines may be tested using an exhaust muffler that is representative of exhaust mufflers used with the engines in use.

40 CFR §60.4205(b); 40 CFR §60.4202(a)(2); and 40 CFR §89.113(a) and (b)

E44-12. Pursuant to 40 CFR §60.4206, owners and operators of stationary CI ICE must operate and maintain stationary CI ICE that achieve the emission standards as required in 40 CFR §60.4205 over the entire life of the engine.

E44-13. Pursuant to 40 CFR §60.4207(b), beginning October 1, 2010, the permittee shall use diesel fuel that meets the requirements of 40 CFR 80.510(b), as follows:

(1) Sulfur content shall not exceed 15 ppm maximum for nonroad diesel fuel.
(2) Cetane index or aromatic content, as follows:
  (i) A minimum cetane index of 40; or
  (ii) A maximum aromatic content of 35 volume percent.

E44-14. Pursuant to 40 CFR §60.4209(a), for each emergency stationary CI internal combustion engine that does not meet the standards applicable to non-emergency engines, the permittee must install a non-resettable hour meter prior to startup of the engine.

E44-15. Pursuant to 40 CFR §60.4211(a), the permittee must do all of the following, except as permitted under paragraph (4) of this condition:

(1) Operate and maintain the stationary CI internal combustion engine and control device according to the manufacturer's emission-related written instructions;
(2) Change only those emission related settings that are permitted by the manufacturer; and
(3) Meet the requirements of 40 CFR parts 89, 94 and/or 1068, as they apply to you.
(4) If the permittee does not install, configure, operate, and maintain the engine and control device according to the manufacturer's emission-related written instructions, or the permittee changes emission related settings in a way that is not permitted by the manufacturer, the permittee must demonstrate compliance as follows:
  (i) The permittee must keep a maintenance plan and records of conducted maintenance and must, to the extent practicable, maintain and operate the engine in a manner consistent with good air pollution control practice for minimizing emissions. In addition, the permittee must conduct an initial performance test to demonstrate compliance with the applicable emission standards within 1 year of startup, or within 1 year after an engine and control device is no longer installed, configured, operated, and maintained in accordance with the manufacturer's emission-related written instructions, or within 1 year after you change emission-related settings in a way that is not permitted by the manufacturer. The permittee must conduct subsequent performance testing every 8,760 hours of engine operation or 3 years, whichever comes first, thereafter to demonstrate compliance with the applicable emission standards.

E44-16. The permittee shall comply with the PM, CO, and (NMHC + NOx) emission limitations by purchasing an engine certified to the emission standards in 40 CFR §60.4205(b) based on the model year and maximum engine power. The permittee shall maintain a record of this certification. The engine shall be installed and configured according to the manufacturer's emission-related specifications, except as permitted in paragragh (4) of **Condition E44-15** of this permit. 40 CFR §60.4211(c)

E44-17. Pursuant to 40 CFR §63.6605, the permittee must be in compliance with the emission limitations and operating limitations in 40 CFR 63, subpart ZZZZ that apply to the permittee at all times. At all times the permittee must operate and maintain any affected source, including associated air pollution control equipment and monitoring equipment, in a manner consistent with safety and good air pollution control practices for minimizing emissions. The general duty to minimize emissions does not require the permittee to make any further efforts to reduce emissions if levels required by this standard have been achieved. Determination of whether such operation and maintenance procedures are being used will be based on information available to the Technical Secretary which may include, but is not limited to, monitoring results, review of operation and maintenance procedures, review of operation and maintenance records, and inspection of the source.

E44-18. Pursuant to 40 CFR 63.6645(c), the permittee must submit an Initial Notification not later than 120 days after the permittee becomes subject to 40 CFR 63, subpart ZZZZ. Pursuant to 40 CFR 63.6645(f), if the permittee is required to submit an Initial Notification but is otherwise not affected by the requirements of 40 CFR 63, subpart ZZZZ, in accordance with 40 CFR §63.6590(b), the Initial Notification should include the information in 40 CFR §63.9(b)(2)(i) through (v), and a statement that the permittee's stationary RICE has no additional requirements and explain the basis of the exclusion (for example, that it operates exclusively as an emergency stationary RICE if it has a site rating of more than 500 brake HP located at a major source of HAP emissions).

E44-19(MM4). The permittee must keep monthly records of the hours of operation of the engine that is recorded through the non-resettable hour meter. The permittee must document how many hours are spent for the following categories: (a) emergency operation, as specified in **Condition E44-20**, Paragraph (1), including what classified the operation as emergency; (b) maintenance checks and readiness testing, as specified in **Condition E44-20**, Paragraph (2); and (c) non-emergency operation, as specified in **Condition E44-20**, Paragraph (3). The permittee shall calculate the operating hours during the calendar year. The permittee shall maintain the following log format or an alternative format which readily provides the same required information.

Logs for each emergency stationary RICE

Month, Year	Emergency Operation (hr/mon)	Emergency Operation (hr/calendar year)	Maintenance Checks and Readiness Testing (hr/mon)	Maintenance Checks and Readiness Testing (hr/calendar year)	Non-Emergency Operation (hr/mon)	Non-Emergency Operation (hr/calendar year)
		Column A		Column B		Column C
January						
February						
Etc.						
December						

	Add Columns A+B+C	Add Columns B+C	Add Columns C
Limit	856 hours for both generators	100 hours for each generator	50 Hours for each generator
January			
February			
Etc.			
December			

E44-20(MM4). Pursuant to 40 CFR §60.4211(f), the permittee must operate the emergency stationary ICE according to the requirements in paragraphs (1) through (3) of this condition. In order for the engine to be considered an emergency stationary ICE under 40 CFR 60, subpart IIII, any operation other than emergency operation, maintenance and testing, and operation in non-emergency situations for 50 hours per year, as described in paragraphs (1) through (3) of this condition, is prohibited. If the permittee does not operate the engine according to the requirements in paragraphs (1) through (3) of this condition, the engine will not be considered an emergency engine under this subpart and must meet all requirements for non-emergency engines.

(1) There is no time limit on the use of emergency stationary ICE in emergency situations, except as provided in **Condition E44-4**.

(2) The permittee may operate your emergency stationary ICE for any combination of the purposes specified in paragraph (2)(i) of this condition for a maximum of 100 hours per calendar year. Any operation for non-emergency situations as allowed by paragraph (3) of this condition counts as part of the 100 hours per calendar year allowed by this paragraph (2).

(i) Emergency stationary ICE may be operated for maintenance checks and readiness testing, provided that the tests are recommended by federal, state or local government, the manufacturer, the vendor, the regional transmission organization or equivalent balancing authority and transmission operator, or the insurance company associated with the engine. The owner or operator may petition the Technical Secretary for approval of additional hours to be used for maintenance checks and readiness testing, but a petition is not required if the owner or operator maintains records indicating that federal, state, or local standards require maintenance and testing of emergency ICE beyond 100 hours per calendar year.

(3) Emergency stationary ICE may be operated for up to 50 hours per calendar year in non-emergency situations. The 50 hours of operation in non-emergency situations are counted as part of the 100 hours per calendar year for maintenance and testing in paragraph (2) of this condition. Except as provided in paragraph (3)(i) of this condition, the 50 hours per calendar year for non-emergency situations cannot be used for peak shaving or non-emergency demand response, or to generate income for a facility to an electric grid or otherwise supply power as part of a financial arrangement with another entity.

(i) The 50 hours per year for non-emergency situations can be used to supply power as part of a financial arrangement with another entity if all of the following conditions are met:

(A) The engine is dispatched by the local balancing authority or local transmission and distribution system operator;

(B) The dispatch is intended to mitigate local transmission and/or distribution limitations so as to avert potential voltage collapse or line overloads that could lead to the interruption of power supply in a local area or region.

(C) The dispatch follows reliability, emergency operation or similar protocols that follow specific NERC, regional, state, public utility commission or local standards or guidelines.

(D) The power is provided only to the facility itself or to support the local transmission and distribution system.

(E) The owner or operator identifies and records the entity that dispatches the engine and the specific NERC, regional, state, public utility commission or local standards or guidelines that are being followed for dispatching the engine. The local balancing authority or local transmission and distribution system operator may keep these records on behalf of the engine owner or operator.

E44-21. For fee purposes, the permittee shall calculate emissions of particulate matter (PM), sulfur dioxide (SO_2), volatile organic compounds (VOC), and nitrogen oxide (NO_x). The permittee shall utilize the emission factors listed in the table below. The permittee shall utilize the hours of operation from **Condition E44-4**. The permittee shall maintain the following log format or an alternative format which readily provides the same required information.

Emission from July 1 to June 30 (Fee Accounting Period)

Pollutant	Emission Factors	Emission Factors Source	Hours of Operation (hr/yr)	Emissions (ton/yr)
PM	0.20 grams PM/kw-hr	NSPS standard		
SO_2	0.0015 lb SO2/MMBtu	AP-42, Section 3.4		
VOC	0.000705 lb VOC/hp-hr	AP-42, Section 3.4		
NO_X	6.4 grams NOx/kw-hr	NSPS standard		

E44-22(SM2). If this source operates for the purposes specified in paragraph (3) of **Condition E44-20(MM4)**, the permittee must submit an annual report according to the following requirements in (a) through (c) of this condition.

(a) The report must contain the following information:
- (i) Company name and address where the engine is located.
- (ii) Date of the report and beginning and ending dates of the reporting period.
- (iii) Engine site rating and model year.
- (iv) Latitude and longitude of the engine in decimal degrees reported to the fifth decimal place.
- (v) Hours spent for operation for the purposes specified in paragraph (3) of **Condition E44-20(MM4)**, including the date, start time, and end time for engine operation for the purposes specified in paragraph (3) of **Condition E44-20(MM4)**. The report must also identify the entity that dispatched the engine and the situation that necessitated the dispatch of the engine.

(b) The first annual report must cover the calendar year 2016 and must be submitted no later than March 31, 2017. Subsequent annual reports for each calendar year must be submitted no later than March 31 of the following calendar year.

(c) The annual report must be submitted electronically using the subpart specific reporting form in the Compliance and Emissions Data Reporting Interface (CEDRI) that is accessed through EPA's Central Data Exchange (CDX) (*www.epa.gov/cdx*). However, if the reporting form specific to this subpart is not available in CEDRI at the time that the report is due, the written report must be submitted to the Technical Secretary at one of the addresses listed below:

By mail:
Division of Air Pollution Control
William R. Snodgrass Tennessee Tower
312 Rosa L. Parks Avenue, 15th Floor
Nashville, TN 37243

Or

By email:
Air.Pollution.Control@tn.gov

40 CFR §60.4214(d)

75-0155-39	Battery Assembly Sealers and Adhesives
Condition E45-1 applies to source 75-0155-39.	

E45-1. Volatile organic compounds (VOCs) emitted from this source (75-0155-39) shall not exceed 32.0 tons during all intervals of 12 consecutive months.

TAPCR 1200-03-07-.07(2) and 1200-03-09-.01(4); This limitation is part of a PSD netting analysis.

Compliance Method: The permittee shall assure compliance with the emission limitation by calculating the total VOC emitted from this source during each calendar month and each interval of 12 consecutive calendar months and maintaining a log that contains the information specified in Attachment 3. The VOC content of all VOC-containing process materials used by this source shall be determined by using material safety data sheets (MSDS), EPA Method 24 or manufacturer/vendor formulation data which explicitly list the VOC content by weight (pounds per gallon or weight percent).

75-0155-56	Natural Gas Fuel Burning Sources This source includes the natural gas fuel burning sources in the Battery Plant. NESHAP (subpart DDDDD)
Conditions E46-1 through E46-15 apply to source 75-0155-56.	

E46-1. This source (75-0155-56) consists of the natural gas fuel burning units listed below. This source includes the natural gas fuel burning units that are permittable units and those units that would otherwise be classified as an "insignificant activity" or "insignificant emission unit".

Phase I and II of the Battery Assembly Plant have one of each of the following units

Registration Number	Battery Assembly Plant Combustion Equipment	NOx Emission Limit (lb/MMscf)	Furnace Type	Applicable to NESHAP?	Maximum Rated Heat Input (MMBtu/hr)
SO11-BP-INS04	DH 4 Dehumidification Unit (Degassing)	100	Indirect	Yes	1.437
SO11-BP-INS08	DH 8 Dehumidification Unit (Degassing)	100	Indirect	Yes	1.437
SO11-BP-INS03	DH 3 Dehumidification Unit (Electrolyte)	100	Indirect	Yes	1.437
SO11-BP-INS07	DH 7 Dehumidification Unit (Electrolyte)	100	Indirect	Yes	1.437
SO11-BP-INS09	DH 9 Redundant unit for DH 3 and DH 7	100	Indirect	Yes	1.437
SO11-BP-INS01	DH 1 Dehumidification Unit (Roll Drying)	100	Indirect	Yes	1.170
SO11-BP-INS02	DH 2 Dehumidification Unit (Roll Drying)	100	Indirect	Yes	1.170
SO11-BP-INS05	DH 5 Dehumidification Unit (Roll Drying)	100	Indirect	Yes	1.170
SO11-BP-INS06	DH 6 Dehumidification Unit (Roll Drying)	100	Indirect	Yes	1.170
SO11-BP-INS10 thru INS14	Door Heaters (UH 1,2,3,4,5) - Dock (5 units at 150,000 each)	100	Indirect	Yes	0.750
SO11-BP-INS15 thru INS18	Door Heaters (DAC 1a, 1b, 2a, 2b) - Ramp (4 units at 345,000 each)	100	Indirect	Yes	1.380
SO11-BP-INS61 RTO	(Electrolyte Fill & Degas)	100	Direct	No - direct fired	2.5
SO11-BP-INS20	AHU 2 Make-up Air Unit (QA Lab) Heat	100	Indirect	Yes	0.270
SO11-BP-INS19	AHU 1 Make-up Air Unit (Die Shop)	100	Indirect	Yes	0.630
SO11-BP-INS21	AHU 27 DX Air Handling Units	100	Direct	Yes	0.235
SO11-BP-INS22	AHU 27a DX Air Handling Units	100	Direct	Yes	0.235
SO11-BP-INS23	ARU 1 Air Rotation Unit	100	Indirect	Yes	1.125
SO11-BP-INS24	ARU 2 Air Rotation Unit	100	Indirect	Yes	1.125
SO11-BP-INS28	ARU 3 Air Rotation Unit	100	Indirect	Yes	2.160
SO11-BP-INS29	ARU 4 Air Rotation Unit	100	Indirect	Yes	1.26
SO11-BP-INS30	ARU 5 Air Rotation Unit	100	Indirect	Yes	1.26
SO11-BP-INS25	ARU 6 Air Rotation Unit	100	Indirect	Yes	1.125
SO11-BP-INS26	ARU 7 Air Rotation Unit	100	Indirect	Yes	1.125
SO11-BP-INS27	ARU 8 Air Rotation Unit	100	Indirect	Yes	1.125
SO11-BP-INS31	ARU 9 Air Rotation Unit	100	Indirect	Yes	1.26
SO11-BP-INS32	ARU 10 Air Rotation Unit	100	Indirect	Yes	1.26
SO11-BP-INS62	Battery Case Sealer Oven	100	Direct	No - direct fired	2.000

E46-2. Only natural gas shall be used as a fuel for this source

Compliance Method: Annual certification of compliance.

E46-3. Natural gas usage for this source (75-0155-56) shall not exceed 250,000,000 standard cubic feet (250 MMscf) during all intervals of 12 consecutive months. The 12-consecutive month period begins when this permit is issued and does not include the months prior to permit issuance.

Compliance Method: The permittee shall assure compliance with this limitation by calculating the total natural gas usage from this source during each calendar month and each interval of 12 consecutive calendar months and maintaining a log that contains the information specified in Attachment 3.

E46-4(MM4). Particulate matter emitted from this source (75-0155-56) shall not exceed 0.95 tons during all intervals of 12 consecutive months. The 12-consecutive month period begins when this permit is issued and does not include the months prior to permit issuance.

TAPCR 1200-03-06-.01(7); Application dated July 2, 2013, and 1200-03-09-.01(4); This limitation is part of a PSD netting analysis.

Compliance Method: The permittee shall assure compliance with this emission limitation by assuring compliance with **Condition E46-3.** Compliance with this emission limitation is based on an emission factor of 7.6 pounds of PM per million cubic feet of natural gas (EPA AP-42, Fifth Edition**,** Section 1.4, July 1998).

E46-5(MM4). Sulfur dioxide emitted from this source (75-0155-56) shall not exceed 0.075 tons during all intervals of 12 consecutive months. The 12-consecutive month period begins when this permit is issued and does not include the months prior to permit issuance.

TAPCR 1200-03-14-.01(3); Application dated July 2, 2013.

Compliance Method: The permittee shall assure compliance with this emission limitation by assuring compliance with **Condition E46-3.** Compliance with this emission limitation is based on an emission factor of 0.6 pounds of sulfur dioxide per million cubic feet of natural gas (EPA AP-42, Fifth Edition, Section 1.4, July 1998).

E46-6(MM4). Nitrogen oxides (NOx) emitted from this source (75-0155-56) shall not exceed 12.5 tons during all intervals of 12 consecutive months. The 12-consecutive month period begins when this permit is issued and does not include the months prior to permit issuance.

TAPCR 1200-03-06-.01(7); Application dated July 2, 2013 and 1200-03-09-.01(4); This limitation is part of a PSD netting analysis.

Compliance Method: The permittee shall assure compliance with this emission limitation by assuring compliance with **Condition E46-3.** Compliance with this emission limitation is based on an emission factor of 100 pounds of nitrogen oxides per million cubic feet of natural gas (EPA AP-42, Fifth Edition, Section 1.4, July 1998).

E46-7(MM4). Nitrogen Oxides (NO_X) emitted from this source (75-0155-56) shall not exceed the limits (in lb/MMscf) listed in **Condition E46-1**.

TAPCR 1200-03-06-.03(2) and 1200-03-27-.03(1)(a)

Compliance Method: The permittee shall maintain documentation from the manufacturer that states the NOx emission rate (in pounds NOx per million cubic feet of natural gas) for each fuel burning unit listed in **Condition 46-1**.

E46-8(MM4). Carbon monoxide emitted from this source (75-0155-56) shall not exceed 10.5 tons during all intervals of 12 consecutive months. The 12-consecutive month period begins when this permit is issued and does not include the months prior to permit issuance.

TAPCR 1200-03-06-.01(7); Application dated July 2, 2013.

Compliance Method: The permittee shall assure compliance with this emission limitation by assuring compliance with **Condition E46-3.** Compliance with this emission limitation is based on an emission factor of 84 pounds of carbon monoxide per million cubic feet of natural gas (EPA AP-42, Fifth Edition**,** Section 1.4, July 1998).

E46-9(MM4). Volatile organic compounds emitted from this source (75-0155-56) shall not exceed 0.688 tons during all intervals of 12 consecutive months. The 12-consecutive month period begins when this permit is issued and does not include the months prior to permit issuance.

TAPCR 1200-03-06-.01(7); Application dated July 2, 2013 and 1200-03-09-.01(4); This limitation is part of a PSD netting analysis.

Compliance Method: The permittee shall assure compliance with this emission limitation by assuring compliance with **Condition E46-3.** Compliance with this emission limitation is based on an emission factor of 5.5 pounds of VOC per million cubic feet of natural gas (EPA AP-42, Fifth Edition**,** Section 1.4, July 1998).

E46-10. Pursuant to 40 CFR §63.7490(b), a boiler or process heater is new if the permittee commences construction of the boiler or process heater after June 4, 2010, and the permittee meets the applicability criteria at the time the permittee commences construction. Pursuant to 40 CFR §63.7495(a), for each new or reconstructed boiler or process heater, the permittee must comply with 40 CFR 63, subpart DDDDD by January 31, 2013, or upon startup of the boiler or process heater, whichever is later.

E46-11. Pursuant to 40 CFR §63.7540(a)(12), for each boiler or process heater that has a continuous oxygen trim system that maintains an optimum air to fuel ratio, or a heat input capacity of less than or equal to 5 million Btu per hour and the unit is in the units designed to burn gas 1; units designed to burn gas 2 (other); or units designed to burn light liquid subcategories, or meets the definition of limited-use boiler or process heater in 40 CFR §63.7575, the permittee must conduct a tune-up of the boiler or process heater every 5 years as specified in paragraphs (i) through (vi) of this condition to demonstrate continuous compliance. The permittee may delay the burner inspection specified in paragraph (i) of this condition until the next scheduled or unscheduled unit shutdown, but the permittee must inspect each burner at least once every 72 months. Pursuant to 40 CFR §63.7540(a)(13), if the unit is not operating on the required date for a tune-up, the tune-up must be conducted within 30 calendar days of startup.

(i) As applicable, inspect the burner, and clean or replace any components of the burner as necessary (the permittee may delay the burner inspection until the next scheduled unit shutdown). Units that produce electricity for sale may delay the burner inspection until the first outage, not to exceed 36 months from the previous inspection. At units where entry into a piece of process equipment or into a storage vessel is required to complete the tune-up inspections, inspections are required only during planned entries into the storage vessel or process equipment;

(ii) Inspect the flame pattern, as applicable, and adjust the burner as necessary to optimize the flame pattern. The adjustment should be consistent with the manufacturer's specifications, if available;

(iii) Inspect the system controlling the air-to-fuel ratio, as applicable, and ensure that it is correctly calibrated and functioning properly (the permittee may delay the inspection until the next scheduled unit shutdown). Units that produce electricity for sale may delay the inspection until the first outage, not to exceed 36 months from the previous inspection;

(iv) Optimize total emissions of CO. This optimization should be consistent with the manufacturer's specifications, if available, and with any NO_X requirement to which the unit is subject;

(v) Measure the concentrations in the effluent stream of CO in parts per million, by volume, and oxygen in volume percent, before and after the adjustments are made (measurements may be either on a dry or wet basis, as long as it is the same basis before and after the adjustments are made). Measurements may be taken using a portable CO analyzer; and

(vi) Maintain on-site and submit, if requested by the Technical Secretary, an annual report containing the information in paragraphs (vi)(A) through (C) of this condition,

(A) The concentrations of CO in the effluent stream in parts per million by volume, and oxygen in volume percent, measured at high fire or typical operating load, before and after the tune-up of the boiler or process heater;

(B) A description of any corrective actions taken as a part of the tune-up; and

(C) The type and amount of fuel used over the 12 months prior to the tune-up, but only if the unit was physically and legally capable of using more than one type of fuel during that period. Units sharing a fuel meter may estimate the fuel used by each unit.

E46-12. Pursuant to 40 CFR §63.7550(b), for units that are subject only to a requirement to conduct an annual, biennial, or 5-year tune-up according to 40 CFR §63.7540(a)(10), (11), or (12) respectively, and not subject to emission limits or operating limits, the permittee may submit only an annual, biennial, or 5-year compliance report, as applicable, as specified in paragraphs 40 CFR §63.7550(b)(1) through (4), instead of a semiannual compliance report. Pursuant to 40 CFR §63.7550(c)(1), if the facility is subject to the requirements of a tune up, then the permittee must submit a compliance report with the following information:

(i) Company and Facility name and address.
(ii) Process unit information, emissions limitations, and operating parameter limitations.
(iii) Date of report and beginning and ending dates of the reporting period.
(iv) The total operating time during the reporting period.
(v) Include the date of the most recent tune-up for each unit subject to only the requirement to conduct an annual, biennial, or 5-year tune-up according to 40 CFR §63.7540(a)(10), (11), or (12) respectively. Include the date of the most recent burner inspection if it was not done annually, biennially, or on a 5-year period and was delayed until the next scheduled or unscheduled unit shutdown.

E46-13. Pursuant to 40 CFR §63.7555(a), the permittee must keep records according to paragraphs (1) and (2) of this condition.

(1) A copy of each notification and report that the permittee submitted to comply with this 40 CFR 63, subpart DDDDD, including all documentation supporting any Initial Notification or Notification of Compliance Status or semiannual compliance report that the permittee submitted, according to the requirements in 40 CFR §63.10(b)(2)(xiv).
(2) Records of performance tests, fuel analyses, or other compliance demonstrations and performance evaluations as required in 40 CFR §63.10(b)(2)(viii).

E46-14. Pursuant to 40 CFR §63.7560, the permittee's records must be in a form suitable and readily available for expeditious review, according to 40 CFR §63.10(b)(1). As specified in 40 CFR §63.10(b)(1), the permittee must keep each record for 5 years following the date of each occurrence, measurement, maintenance, corrective action, report, or record. The permittee must keep each record on site, or they must be accessible from on site (for example, through a computer network), for at least 2 years after the date of each occurrence, measurement, maintenance, corrective action, report, or record, according to 40 CFR §63.10(b)(1). The permittee can keep the records off site for the remaining 3 years.

E46-15. For fee purposes, the permittee shall calculate emissions of particulate matter (PM), sulfur dioxide (SO_2), volatile organic compounds (VOC), and nitrogen oxide (NO_x). The permittee shall utilize the emission factors listed in the table below. The permittee shall maintain the following log format or an alternative format which readily provides the same required information.

Emission from July 1 to June 30 (Fee Accounting Period)

Pollutant	Emission Factors	Emission Factors Source	Natural Gas Usage (scf/yr)	Emissions (ton/yr)
PM	7.6 lb PM/million cubic feet	AP-42, Section 1.4		
SO_2	0.6 lb SO_2/million cubic feet	AP-42, Section 1.4		
VOC	5.5 lb VOC/million cubic feet	AP-42, Section 1.4		
NOx	see Condition E46-1	Manufacturer data		

75-0155-55	Two Diesel-Fired Emergency Reciprocating Internal Combustion Engines with Generators for Battery Assembly Plant. NSPS (Subpart IIII), NESHAP (Subpart ZZZZ)
Conditions E47-1 through E47-22 apply to source 75-0155-55.	

E47-1. This source is subject to the Standards of Performance for Stationary Compression Ignition Internal Combustion Engines (40 CFR Part 60, Subpart IIII). The permittee shall comply with 40 CFR Part 60, Subpart IIII upon startup.

E47-2. This source is subject to the National Emission Standards for Hazardous Air Pollutants for Stationary Reciprocating Internal Combustion Engines (40 CFR Part 63, Subpart ZZZZ). The permittee shall comply with 40 CFR Part 63, Subpart ZZZZ upon startup.

E47-3. The maximum power output for each engine shall not exceed 2,179 kilowatts (2,179 kW). The maximum power output for this source (both engines) shall not exceed 4,358 kilowatts (4,358 kW).

E47-4. The maximum hours of operation for this source (both engines) shall not exceed 100 hours during all intervals of twelve (12) consecutive months.

TAPCR 1200-03-09-.01(4); Agreement letter dated March 3, 2013; This limitation is part of a PSD netting analysis.

Compliance Method: The permittee shall assure compliance with this limitation by maintaining a log of the monthly hours of operation and calculating the hours of operation during all intervals of 12 consecutive months.

Month, Year	Hours of Operation for BA-11-P9 (hours/month)	Hours of Operation for BA-11-P10 (hours/month)	Hours of Operation for both Generators (hours/month)	Hours of Operation for both Generators (hours/12 consecutive months)
January				
February				
Etc.				
December				

The Hours per 12 consecutive month value is the sum of the Hours of Operation in the 11 months preceding the month just completed + the Hours of Operation in the month just completed. If data is not available for the 11 months preceding the initial use of this table, this value will be equal to the value for Hours of Operation.

E47-5. Only No. 2 fuel oil and diesel fuel shall be used as fuels for this source.

E47-6. Particulate Matter (TSP) emitted from this source (75-0155-55) shall not exceed 0.20 grams per kilowatt-hour (1.92 lb/hr) and 0.048 tons during all intervals of 12 consecutive months.

40 CFR §60.4205(b) and 1200-03-09-.01(4); This limitation is part of a PSD netting analysis.

Compliance Method: The permittee shall assure compliance with this emission limitation by assuring compliance with **Conditions E47-3, E47-4, E47-12, E47-15, and E47-16.**

E47-7. Sulfur Dioxide (SO_2) emitted from this source (75-0155-55) shall not exceed 0.11 pounds per hour and 0.003 tons during all intervals of 12 consecutive months.

TAPCR 1200-03-14-.03(5)

Compliance Method: The permittee shall assure compliance with this emission limitation by assuring compliance with **Conditions E47-3, E47-4, and E47-13.**

E47-8(MM4). Carbon Monoxide (CO) emitted from this source (75-0155-55) shall not exceed 3.5 grams per kilowatt-hour (33.63 lb/hr) and 0.84 tons during all intervals of 12 consecutive months.

40 CFR §60.4205(b)

Compliance Method: The permittee shall assure compliance with this emission limitation by assuring compliance with **Conditions E47-3, E47-4, E47-12, E47-15, and E47-16.**

E47-9. Volatile Organic Compounds (VOCs) emitted from this source (75-0155-55) shall not exceed 4.1 pounds per hour and 0.1 tons during all intervals of 12 consecutive months.

TAPCR 1200-03-07-.07(2) and 1200-03-09-.01(4); This limitation is part of a PSD netting analysis.

Compliance Method: The permittee shall assure compliance with this emission limitation by assuring compliance with **Conditions E47-3 and E47-4.** Compliance with this emission limitation is based on an emission factor of 0.000705 pounds of VOC per horsepower-hour (EPA AP-42, Section 3.4, October 1996).

E47-10. Non-Methane Hydrocarbons and Nitrogen Oxides (NMHC + NO_X) emitted from this source (75-0155-55) shall not exceed 6.4 grams per kilowatt-hour (61.5 lb/hr) and 1.5 tons during all intervals of 12 consecutive months.

40 CFR §60.4205(b) and 1200-03-09-.01(4); This limitation is part of a PSD netting analysis.

Compliance Method: The permittee shall assure compliance with this emission limitation by assuring compliance with **Conditions E47-3, E47-4, E47-12, E47-15, and E47-16.**

E47-11. Visible emissions from this source (75-0155-55) shall not exceed the following:

a) Twenty percent (20%) opacity during the acceleration mode;
b) Fifteen percent (15%) opacity during the lugging mode; and
c) Fifty percent (50%) opacity during the peaks in either the acceleration or lugging modes.

The engine manufacturer is responsible for testing. Opacity levels are to be measured and calculated as set forth in 40 CFR part 86, subpart I. Notwithstanding the provisions of 40 CFR part 86, subpart I, two-cylinder nonroad engines may be tested using an exhaust muffler that is representative of exhaust mufflers used with the engines in use.

40 CFR §60.4205(b); 40 CFR §60.4202(a)(2); and 40 CFR §89.113(a) and (b)

Compliance Method: The permittee shall assure compliance with this visible emission limitation by assuring compliance with **Conditions E47-12, E47-15, and E47-16.**

E47-12. Pursuant to 40 CFR §60.4206, owners and operators of stationary CI ICE must operate and maintain stationary CI ICE that achieve the emission standards as required in 40 CFR §60.4205 over the entire life of the engine.

E47-13. Pursuant to 40 CFR §60.4207(b), beginning October 1, 2010, the permittee shall use diesel fuel that meets the requirements of 40 CFR 80.510(b), as follows:

(1) Sulfur content shall not exceed 15 ppm maximum for nonroad diesel fuel.
(2) Cetane index or aromatic content, as follows:
  (i) A minimum cetane index of 40; or
  (ii) A maximum aromatic content of 35 volume percent.

E47-14. Pursuant to 40 CFR §60.4209(a), for each emergency stationary CI internal combustion engine that does not meet the standards applicable to non-emergency engines, the permittee must install a non-resettable hour meter prior to startup of the engine.

E47-15. Pursuant to 40 CFR §60.4211(a), the permittee must do all of the following, except as permitted under paragraph (4) of this condition:

(1) Operate and maintain the stationary CI internal combustion engine and control device according to the manufacturer's emission-related written instructions;
(2) Change only those emission related settings that are permitted by the manufacturer; and
(3) Meet the requirements of 40 CFR parts 89, 94 and/or 1068, as they apply to you.
(4) If the permittee does not install, configure, operate, and maintain the engine and control device according to the manufacturer's emission-related written instructions, or the permittee changes emission related settings in a way that is not permitted by the manufacturer, the permittee must demonstrate compliance as follows:
  (i) The permittee must keep a maintenance plan and records of conducted maintenance and must, to the extent practicable, maintain and operate the engine in a manner consistent with good air pollution control practice for minimizing emissions. In addition, the permittee must conduct an initial performance test to demonstrate compliance with the applicable emission standards within 1 year of startup, or within 1 year after an engine and control device is no longer installed, configured, operated, and maintained in accordance with the manufacturer's emission-related written instructions, or within 1 year after you change emission-related settings in a way that is not permitted by the manufacturer. The permittee must conduct subsequent performance testing every 8,760 hours of engine operation or 3 years, whichever comes first, thereafter to demonstrate compliance with the applicable emission standards.

E47-16. The permittee shall comply with the PM, CO, and (NMHC + NOx) emission limitations by purchasing an engine certified to the emission standards in 40 CFR §60.4205(b) based on the model year and maximum engine power. The permittee shall maintain a record of this certification. The engine shall be installed and configured according to the manufacturer's emission-related specifications, except as permitted in paragragh (4) of **Condition E47-15** of this permit. 40 CFR §60.4211(c)

E47-17. Pursuant to 40 CFR §63.6605, the permittee must be in compliance with the emission limitations and operating limitations in 40 CFR 63, subpart ZZZZ that apply to the permittee at all times. At all times the permittee must operate and maintain any affected source, including associated air pollution control equipment and monitoring equipment, in a manner consistent with safety and good air pollution control practices for minimizing emissions. The general duty to minimize emissions does not require the permittee to make any further efforts to reduce emissions if levels required by this standard have been achieved. Determination of whether such operation and maintenance procedures are being used will be based on information available to the Technical Secretary which may include, but is not limited to, monitoring results, review of operation and maintenance procedures, review of operation and maintenance records, and inspection of the source.

E47-18. Pursuant to 40 CFR 63.6645(c), the permittee must submit an Initial Notification not later than 120 days after the permittee becomes subject to 40 CFR 63, subpart ZZZZ. Pursuant to 40 CFR 63.6645(f), if the permittee is required to submit an Initial Notification but is otherwise not affected by the requirements of 40 CFR 63, subpart ZZZZ, in accordance with 40 CFR §63.6590(b), the Initial Notification should include the information in 40 CFR §63.9(b)(2)(i) through (v), and a statement that the permittee's stationary RICE has no additional requirements and explain the basis of the exclusion (for example, that it operates exclusively as an emergency stationary RICE if it has a site rating of more than 500 brake HP located at a major source of HAP emissions).

E47-19(MM4). Pursuant to 40 CFR §60.4211(f), the permittee must operate the emergency stationary ICE according to the requirements in paragraphs (1) through (3) of this condition. In order for the engine to be considered an emergency stationary ICE under 40 CFR 60, subpart IIII, any operation other than emergency operation, maintenance and testing, and operation in non-emergency situations for 50 hours per year, as described in paragraphs (1) through (3) of this condition, is prohibited. If the permittee does not operate the engine according to the requirements in paragraphs (1) through (3) of this condition, the engine will not be considered an emergency engine under this subpart and must meet all requirements for non-emergency engines.

(1) There is no time limit on the use of emergency stationary ICE in emergency situations, except as specified in **Condition E47-4**.

(2) The permittee may operate your emergency stationary ICE for any combination of the purposes specified in paragraph (2)(i) of this condition for a maximum of 100 hours per calendar year. Any operation for non-emergency situations as allowed by paragraph (3) of this condition counts as part of the 100 hours per calendar year allowed by this paragraph (2).

(i) Emergency stationary ICE may be operated for maintenance checks and readiness testing, provided that the tests are recommended by federal, state or local government, the manufacturer, the vendor, the regional transmission organization or equivalent balancing authority and transmission operator, or the insurance company associated with the engine. The owner or operator may petition the Technical Secretary for approval of additional hours to be used for maintenance checks and readiness testing, but a petition is not required if the owner or operator maintains records indicating that federal, state, or local standards require maintenance and testing of emergency ICE beyond 100 hours per calendar year.

(3) Emergency stationary ICE may be operated for up to 50 hours per calendar year in non-emergency situations. The 50 hours of operation in non-emergency situations are counted as part of the 100 hours per calendar year for maintenance and testing provided in paragraph (2) of this condition. Except as provided in paragraph (3)(i) of this condition, the 50 hours per calendar year for non-emergency situations cannot be used for peak shaving or non-emergency demand response, or to generate income for a facility to an electric grid or otherwise supply power as part of a financial arrangement with another entity.

(i) The 50 hours per year for non-emergency situations can be used to supply power as part of a financial arrangement with another entity if all of the following conditions are met:

(A) The engine is dispatched by the local balancing authority or local transmission and distribution system operator;

(B) The dispatch is intended to mitigate local transmission and/or distribution limitations so as to avert potential voltage collapse or line overloads that could lead to the interruption of power supply in a local area or region.

(C) The dispatch follows reliability, emergency operation or similar protocols that follow specific NERC, regional, state, public utility commission or local standards or guidelines.

(D) The power is provided only to the facility itself or to support the local transmission and distribution system.

(E) The owner or operator identifies and records the entity that dispatches the engine and the specific NERC, regional, state, public utility commission or local standards or guidelines that are being followed for

dispatching the engine. The local balancing authority or local transmission and distribution system operator may keep these records on behalf of the engine owner or operator.

E47-20(MM4). The permittee must keep monthly records of the hours of operation of the engine that is recorded through the non-resettable hour meter. The permittee must document how many hours are spent for the following categories: (a) emergency operation, as specified in **Condition E47-19**, Paragraph (1), including what classified the operation as emergency; (b) maintenance checks and readiness testing, as specified in **Condition E47-19**, Paragraph (2); and (c) non-emergency operation, as specified in **Condition E47-19**, Paragraph (3). The permittee shall calculate the operating hours during the calendar year. The permittee shall maintain the following log format or an alternative format which readily provides the same required information.

Logs for each emergency stationary RICE

Month, Year	Emergency Operation (hr/mon)	Emergency Operation (hr/calendar year)	Maintenance Checks and Readiness Testing (hr/mon)	Maintenance Checks and Readiness Testing (hr/calendar year)	Non-Emergency Operation (hr/mon)	Non-Emergency Operation (hr/calendar year)
		Column A		Column B		Column C
January						
February						
Etc.						
December						

	Add Columns A+B+C	Add Columns B+C	Add Columns C
Limit	100 hours for both generators	100 hours for each generator	50 Hours for each generator
January			
February			
Etc.			
December			

E47-21. For fee purposes, the permittee shall calculate emissions of particulate matter (PM), sulfur dioxide (SO_2), volatile organic compounds (VOC), and nitrogen oxide (NO_x). The permittee shall utilize the emission factors listed in the table below. The permittee shall utilize the hours of operation from **Condition E47-4**. The permittee shall maintain the following log format or an alternative format which readily provides the same required information.

Emission from July 1 to June 30 (Fee Accounting Period)

Pollutant	Emission Factors	Emission Factors Source	Hours of Operation (hr/yr)	Emissions (ton/yr)
PM	0.20 grams PM/kw-hr	NSPS standard		
SO_2	0.0015 lb SO2/MMBtu	AP-42, Section 3.4		
VOC	0.000705 lb VOC/hp-hr	AP-42, Section 3.4		
NO_X	6.4 grams NOx/kw-hr	NSPS standard		

E47-22(SM2). If this source operates for the purposes specified in paragraph (3) of **Condition E47-19(MM4)**, the permittee must submit an annual report according to the following requirements in (a) through (c) of this condition.

(a) The report must contain the following information:
- (i) Company name and address where the engine is located.
- (ii) Date of the report and beginning and ending dates of the reporting period.
- (iii) Engine site rating and model year.
- (iv) Latitude and longitude of the engine in decimal degrees reported to the fifth decimal place.
- (v) Hours spent for operation for the purposes specified in paragraph (3) of **Condition E47-19(MM4)**, including the date, start time, and end time for engine operation for the purposes specified in paragraph (3) of **Condition E47-19(MM4)**. The report must also identify the entity that dispatched the engine and the situation that necessitated the dispatch of the engine.

(b) The first annual report must cover the calendar year 2016 and must be submitted no later than March 31, 2017. Subsequent annual reports for each calendar year must be submitted no later than March 31 of the following calendar year.

(c) The annual report must be submitted electronically using the subpart specific reporting form in the Compliance and Emissions Data Reporting Interface (CEDRI) that is accessed through EPA's Central Data Exchange (CDX) (*www.epa.gov/cdx*). However, if the reporting form specific to this subpart is not available in CEDRI at the time that the report is due, the written report must be submitted to the Technical Secretary at one of the addresses listed below:

By mail:
Division of Air Pollution Control
William R. Snodgrass Tennessee Tower
312 Rosa L. Parks Avenue, 15th Floor
Nashville, TN 37243

Or

By email:
Air.Pollution.Control@tn.gov

40 CFR §60.4214(d)

75-0155-22	Miscellaneous Solvent Usage. Facility wide except 75-0155-26
Condition **E51-1** applies to source 75-0155-22.	

E51-1. Volatile Organic Compounds (VOCs) emitted from this source (75-0155-22) shall not exceed 575.0 tons during all intervals of 12 consecutive months.

TAPCR 1200-03-07-.07(2); 1200-03-07-.01(5); 1200-03-09-.01(4) PSD evaluation 12/21/88; 1200-03-09-.01(5) Nonattainment NSR evaluations 5/11/89 and 6/30/83; This limitation is part of a PSD netting analysis.

Miscellaneous Solvent Usage includes Paint Line 2 Solvent Wiping, Paint Line 2 Primer Coating Line solvents, Paint Line 2 Topcoat Lines solvents and touch-up operations solvents, Fascia Paint Line 2 Plastics Plant Coating Lines solvents, Paint Line 1 Solvent Wiping, Paint Line 1 Primer Coating Line solvents, Paint Line 1 Topcoat Lines solvents and miscellaneous operations solvents, Battery Plant, Fascia Paint Line 1 Plastics Plant Coating Lines solvents, and other solvent usage throughout the facility except for Source 75-0155-26.

Compliance Method: The permittee shall assure compliance with the emission limitation by calculating the total VOC emitted from this source during each calendar month and each interval of 12 consecutive calendar months and maintaining a log that contains the information specified in Attachment 3. The VOC content of all VOC-containing process materials used by this source shall be determined by using safety data sheets (SDS), EPA Method 24 or manufacturer/vendor formulation data which explicitly list the VOC content by weight (pounds per gallon or weight percent).

75-0155-78	Miscellaneous Sealers and Adhesives Usage
Condition E52-1 applies to source 75-0155-78.	

E52-1. Volatile Organic Compounds (VOCs) emitted from this source (75-0155-78) shall not exceed 101.33 tons during all intervals of 12 consecutive months. Miscellaneous Sealers and Adhesives Usage includes Body Shop Adhesives and Sealers, Paint Line 2 Sealer Booth, Trim and Chassis Vehicle Assembly Lines, and other sealer and adhesive usage. Sealer and adhesive usage in Paint Line 1 (75-0155-51) and Battery Plant Sealer and Adhesives (75-0155-39) are not included in this source.

TAPCR 1200-03-07-.07(2)

Compliance Method: The permittee shall assure compliance with the emission limitation by calculating the total VOC emitted from this source during each calendar month and each interval of 12 consecutive calendar months and maintaining a log that contains the information specified in Attachment 3. The VOC content of all VOC-containing process materials used by this source shall be determined by using material safety data sheets (MSDS), EPA Method 24 or manufacturer/vendor formulation data which explicitly list the VOC content by weight (pounds per gallon or weight percent).

75-0155-01	Three Natural Gas-fired Boilers RACT, NSPS, NESHAP
Conditions E61-1 through E61-14 apply to source 75-0155-01.	

E61-1. The maximum heat input capacity for this source (75-0155-01) shall not exceed 173,559,000 British Thermal Units per hour (173.559 MMBtu/hr).

Compliance Method: Compliance by certification

E61-2. Only natural gas shall be used as a fuel for this source.

Compliance Method: Compliance by certification

E61-3. Natural gas fuel usage for this source (75-0155-01) shall not exceed 1,200 million standard cubic feet during all intervals of twelve consecutive months. This limitation is established pursuant to the information contained in the agreement letter dated October 10, 2012 from the permittee. The permittee has requested this limit in order to avoid PSD review.

Compliance Method: The permittee shall assure compliance by maintaining the records required by **Condition E61-9**.

E61-4. Particulate matter (PM) emitted from this source (75-0155-01) shall not exceed 3.0 pounds per hour.

TAPCR 1200-03-06-.01(7); Agreement letter dated October 10, 2012

Compliance Method: The permittee shall assure compliance with the PM emission limitation by assuring compliance with **Conditions E61-1 and E61-2**. Compliance is assured based on an emission factor of 0.016 lb PM/MMBtu.

E61-5. Sulfur dioxide (SO_2) emitted from this source (75-0155-01) shall not exceed 1.0 pound per hour.

TAPCR 1200-03-14-.01(3); Agreement letter dated October 10, 2012

Compliance Method: The permittee shall assure compliance with the SO_2 emission limitation by assuring compliance with **Conditions E61-1 and E61-2**. Compliance is assured based on a Cleaver Brooks emission factor of 0.0017 lb SO_2/MMBtu.

E61-6. Carbon Monoxide (CO) emitted from this source (75-0155-01) shall not exceed 50.4 tons during all intervals of twelve consecutive months.

TAPCR 1200-03-06-.03(2)

Compliance Method: The permittee shall assure compliance with the CO emission limitation by assuring compliance with **Conditions E61-1, E61-2, and E61-3**. Compliance is assured based on an AP-42 emission factor of 84 lb CO/MMscf.

E61-7. Volatile Organic Compounds (VOCs) emitted from this source (75-0155-01) shall not exceed 3.7 tons during all intervals of twelve consecutive months.

TAPCR 1200-03-06-.03(2)

Compliance Method: The permittee shall assure compliance with the VOC emission limitation by assuring compliance with **Conditions E61-1, E61-2, and E61-3**. Compliance is assured based on a Cleaver Brooks emission factor of 0.006 lb VOC/MMBtu.

E61-8. Nitrogen Oxides (NO_X) emitted from this source (75-0155-01) shall not exceed 6.25 pounds per hour and 22.2 tons during all intervals of twelve consecutive months.

TAPCR 1200-03-06-.03(2) and 1200-03-27-.03(1)(a)

Compliance Method: The permittee shall assure compliance with the NOx emission limitations by assuring compliance with **Conditions E61-1, E61-2, and E61-3**. Compliance is assured based on a Cleaver Brooks emission factor of 0.036 lb NOx/MMBtu. The permittee has specified that the three boilers are equipped with low-NOx burners and flue gas recirculation. The permittee shall not operate the three boilers unless the low-NOx burners and flue gas recirculation are fully operational. The permittee shall maintain documentation from the manufacturer that states that these features are present and provides NOx emission factors.

E61-9. The three boilers are subject to 40 CFR Part 60 Subpart Dc. The recordkeeping requirement of 40 CFR §60.48c(g) is modified in accordance with EPA and TAPCD guidance to allow for monthly rather than daily recording of fuel combusted. The permittee shall maintain a log of the monthly fuel usage for this source. The permittee shall calculate the fuel usage during each calendar month and each interval of 12 consecutive months and maintaining a log that contains the information specified in Attachment 3.

E61-10. This source is subject to 40 CFR 63, subpart DDDDD (National Emission Standards for Hazardous Air Pollutants for Industrial, Commercial, and Institutional Boilers and Process Heaters). Pursuant to 40 CFR §63.7495(a), the permittee shall comply with this rule upon startup of the affected source.

E61-11. Pursuant to 40 CFR §63.7540(a)(12), for each boiler that has a continuous oxygen trim system that maintains an optimum air to fuel ratio and the unit is designed to burn gas 1, the permittee must conduct a tune-up of each boiler every 5 years as specified in paragraphs (i) through (vi) of this condition to demonstrate continuous compliance. The permittee may delay the burner inspection specified in paragraph (i) of this condition until the next scheduled or unscheduled unit shutdown, but the permittee must inspect each burner at least once every 72 months. Pursuant to 40 CFR §63.7540(a)(13), if the unit is not operating on the required date for a tune-up, the tune-up must be conducted within 30 calendar days of startup.

(i) As applicable, inspect the burner, and clean or replace any components of the burner as necessary (the permittee may delay the burner inspection until the next scheduled unit shutdown). Units that produce electricity for sale may delay the burner inspection until the first outage, not to exceed 36 months from the previous inspection. At units where entry into a piece of process equipment or into a storage vessel is required to complete the tune-up inspections, inspections are required only during planned entries into the storage vessel or process equipment;

(ii) Inspect the flame pattern, as applicable, and adjust the burner as necessary to optimize the flame pattern. The adjustment should be consistent with the manufacturer's specifications, if available;

(iii) Inspect the system controlling the air-to-fuel ratio, as applicable, and ensure that it is correctly calibrated and functioning properly (the permittee may delay the inspection until the next scheduled unit shutdown). Units that produce electricity for sale may delay the inspection until the first outage, not to exceed 36 months from the previous inspection;

(iv) Optimize total emissions of CO. This optimization should be consistent with the manufacturer's specifications, if available, and with any NO_X requirement to which the unit is subject;

(v) Measure the concentrations in the effluent stream of CO in parts per million, by volume, and oxygen in volume percent, before and after the adjustments are made (measurements may be either on a dry or wet basis, as long as it is the same basis before and after the adjustments are made). Measurements may be taken using a portable CO analyzer; and

(vi) Maintain on-site and submit, if requested by the Technical Secretary, an annual report containing the information in paragraphs (vi)(A) through (C) of this condition,

(A) The concentrations of CO in the effluent stream in parts per million by volume, and oxygen in volume percent, measured at high fire or typical operating load, before and after the tune-up of the boiler or process heater;

(B) A description of any corrective actions taken as a part of the tune-up; and

(C) The type and amount of fuel used over the 12 months prior to the tune-up, but only if the unit was physically and legally capable of using more than one type of fuel during that period. Units sharing a fuel meter may estimate the fuel used by each unit.

E61-12. Pursuant to 40 CFR §63.7550(b), for units that are subject only to a requirement to conduct a 5-year tune-up according to 40 CFR §63.7540(a)(12), and not subject to emission limits or operating limits, the permittee may submit only a 5-year compliance report, instead of a semi-annual compliance report. The first compliance report must cover the period from March 22, 2013, to March 31, 2018; and must be submitted by May 30, 2018. The second compliance report must cover the reporting period from April 1, 2018, to March 31, 2023; and must be submitted by May 30, 2023. Each subsequent compliance report must cover the 5-year reporting period beginning on April 1 and ending 5 years later on March 31; and must be submitted by May 30.

E61-13. Pursuant to 40 CFR §63.7550(c), a compliance report must contain the following information:

(i) Company and Facility name and address.

(ii) Process unit information, emissions limitations, and operating parameter limitations.

(iii) Date of report and beginning and ending dates of the reporting period.

(iv) The total operating time during the reporting period.

(v) Include the date of the most recent tune-up for each unit subject to only the requirement to conduct a 5-year tune-up according to 40 CFR §63.7540(a)(12). Include the date of the most recent burner inspection if it was not done on a 5-year period and was delayed until the next scheduled or unscheduled unit shutdown.

E61-14. For fee purposes, the permittee shall calculate emissions of particulate matter (PM), sulfur dioxide (SO_2), volatile organic compounds (VOC), and nitrogen oxide (NO_x). The permittee shall utilize the emission factors listed in the table below. The permittee shall maintain the following log format or an alternative format which readily provides the same required information.

Emission from July 1 to June 30 (Fee Accounting Period)

Pollutant	Emission Factors	Emission Factors Source	Fuel Usage (scf)	Emissions (ton/yr)
PM	0.016 lb PM/MMBtu	Cleaver Brooks/AP-42		
SO_2	0.0017 lb SO_2/MMBtu	Cleaver Brooks		
VOC	0.006 lb VOC/MMBtu	Cleaver Brooks		
NO_X	0.036 lb NOx/MMBtu	Cleaver Brooks		

75-0155-65	Natural Gas Fuel Burning This source does not include natural gas fuel burning sources that meet the definition of an "insignificant activity" or "insignificant emissions unit."
Conditions E62-1 through E62-9 apply to source 75-0155-65.	

E62-1. Natural gas usage for this source (75-0155-65) shall not exceed 3,078.7 MMscf during all intervals of twelve consecutive months. The following natural gas fuel burning units are included in this source (75-0155-65):

Natural gas fuel burning unit	Heat input capacity (MMBtu/hr)
Paint Line 2 Prime 2.1 Air Supply House	35.2
Paint Line 2 Prime 2.2 Air Supply House	35.2
Paint Line 2 Color 3 Booth Air Supply House	30.8
Paint Line 2 Color 4 Booth Air Supply House	30.8
Paint Line 2 Clear 3 Booth Air Supply House	29.7
Paint Line 2 Clear 4 Booth Air Supply House	29.7
Fascia Paint Line 2 Air Supply House #1	27.5
Fascia Paint Line 2 Air Supply House #2	27.5
Paint Line 2 Air Conditioning #2	26.95
Paint Line Air Conditioning #1	26.95
Paint Line 2 Major Metal Air Supply House	21.45
Paint Line 2 Damp Sand Air Supply House	18.15
Paint Line 2 Tu-Tone/Wax Air Supply House	11.55

Compliance Method: The permittee shall assure compliance with the natural gas usage limitation by maintaining a log (that contains the information specified in Attachment 3) of the natural gas usage for each calendar month and during each interval of twelve consecutive calendar months. For purposes of this condition, the permittee may use the facility-wide natural gas usage, which includes insignificant sources, to determine the monthly fuel usage. If fuel usage from insignificant sources is included, the permittee shall clearly state this in the log.

E62-2. Only natural gas shall be used as a fuel for this source (75-0155-65).

Compliance Method: Annual certification of compliance.

E62-3. Particulate matter (PM) emitted from this source (75-0155-65) shall not exceed 8.01 pounds per hour.

TAPCR 1200-03-26-.02(9)(g)1.; Agreement letter dated August 1, 2007

Compliance Method: Compliance with this emission limitation is based on an emission factor of 7.6 pounds of TSP per million cubic feet of natural gas (EPA AP-42, Fifth Edition**,** Section 1.4, July 1998).

E62-4. Sulfur dioxide(SO_2) emitted from this source (75-0155-65) shall not exceed 0.42 pounds per hour.

TAPCR 1200-03-26-.02(9)(g)1.; Agreement letter dated August 1, 2007

Compliance Method: Compliance with this emission limitation is based on an emission factor of 0.6 pounds of sulfur dioxide per million cubic feet of natural gas (EPA AP-42, Fifth Edition, Section 1.4, July 1998).

E62-5. Nitrogen oxides (NO_x) emitted from this source(75-0155-65) shall not exceed 35.1 pounds per hour and 153.9 tons during all intervals of twelve consecutive months.

TAPCR 1200-03-06-.03(2)

Compliance Method: Compliance with the hourly emission limitation is based on an emission factor of 100 pounds of nitrogen oxides per million cubic feet of natural gas (EPA AP-42, Fifth Edition**,** Section 1.4, July 1998). The permittee shall assure compliance with the annual emission limitation by calculating the NOx emissions during each calendar month and each interval of twelve consecutive calendar months and maintaining a log that contains the information specified in Attachment 3.

E62-6. Carbon monoxide (CO) emitted from this source (75-0155-65) shall not exceed 29.5 pounds per hour and 129.3 tons during all intervals of twelve consecutive months.

TAPCR 1200-03-06-.03(2)

Compliance Method: Compliance with the hourly emission limitation is based on an emission factor of 84 pounds of carbon monoxide per million cubic feet of natural gas (EPA AP-42, Fifth Edition**,** Section 1.4, July 1998). The permittee shall assure compliance with the annual emission limitation by calculating the CO emissions during each calendar month and each interval of twelve consecutive calendar months and maintaining a log that contains the information specified in Attachment 3.

E62-7. Volatile organic compounds (VOC) emitted from this source (75-0155-65) shall not exceed 1.93 pounds per hour and 8.5 tons during all intervals of twelve consecutive months.

TAPCR 1200-03-06-.03(2)

Compliance Method: Compliance with the hourly emission limitation is based on an emission factor of 5.5 pounds of VOC per million cubic feet of natural gas (EPA AP-42, Fifth Edition**,** Section 1.4, July 1998). The permittee shall assure compliance with the annual emission limitation by calculating the VOC emissions during each calendar month and each interval of twelve consecutive calendar months and maintaining a log that contains the information specified in Attachment 3.

E62-8. Visible emissions from this source (75-0155-65) shall not exceed ten (10) percent opacity (6-minute average). Visible emissions from this source shall be determined by EPA Method 9, as published in the current 40 CFR 60, Appendix A (6 minute average).

TAPCR 1200-03-05-.03(6)

Compliance Method: The permittee shall assure compliance with the opacity standard by utilizing the opacity matrix dated June 18, 1996 that is enclosed as Attachment 2.

If the magnitude and frequency of excursions reported by the permittee in the periodic monitoring for emissions is unsatisfactory to the Technical Secretary, this permit may be reopened to impose additional opacity monitoring requirements.

E62-9. This condition is for fee purposes only and shall not be used to determine compliance with **Conditions E62-1** through **E62-8**. The permittee shall maintain a log (that contains the information specified in Attachment 3) of the monthly and yearly (from July 1 to June 30) fuel usage and emissions for this source. The permittee shall calculate the monthly and yearly (from July 1 to June 30) emissions of particulate matter (PM), sulfur dioxide (SO_2), volatile organic compounds (VOC), and nitrogen oxides (NOx). For purposes of this condition, the permittee may use the facility-wide natural gas usage, which includes insignificant sources, to determine the monthly fuel usage. If insignificant sources are included, the permittee shall clearly state this in the log.

TAPCR 1200-03-26-.02(9); State Only Requirement

75-0155-61	Paint Strip House Packed Bed Scrubber with Mist Eliminator
Conditions E64-1 through E64-3 apply to source 75-0155-61.	

E64-1. Particulate matter emitted from this source (75-0155-61) shall not exceed 2.02 pounds per hour.

TAPCR 1200-03-07-.01(5); Agreement letter dated August 22, 2003.

Compliance Method: This source shall not operate without the use of exhaust scrubber control. Preventive maintenance shall be performed on the exhaust scrubber. Appropriate maintenance logs including dates when preventive maintenance was performed and what preventive maintenance and/or repairs were done shall be kept to confirm compliance with this requirement.

E64-2. Volatile organic compounds (VOC) emitted from this source (75-0155-61) shall not exceed 15.0 tons during any period of 12 consecutive months.

TAPCR 1200-03-07-.07(2)

Compliance Method: The permittee shall assure compliance with the emission limitation by calculating the total VOC emitted from this source during each calendar month and maintaining a log that contains the information specified in Attachment 3. The VOC content of all VOC-containing process materials used by this source shall be determined by using material safety data sheets (MSDS) or manufacturer or vendor formulation data which explicitly list the VOC content by weight (pounds per gallon or weight percent).

E64-3. The permittee shall utilize all reasonable techniques for preventing evaporation of VOC's during handling, storage, use and disposal of VOC-containing materials; this level of control is considered to be "minimum reasonably attainable emissions." Compliance with "minimum reasonably attainable emissions" shall be considered to be achieved when the following procedures are utilized:

(a) No open containers shall be used for the storage or disposal of materials impregnated with VOC that are used for surface preparation, cleanup, coating removal, or facility or equipment cleaning or maintenance.
(b) No open containers shall be used for the storage of spent or fresh VOC to be used for surface preparation, cleanup, coating removal, or facility or equipment cleaning or maintenance except as otherwise provided for in TAPCR 1200-03-18-.06, such as in TAPCR 1200-03-18-.06(3)(d).
(c) No VOC shall be used for the cleanup of tools and process equipment, such as spray equipment, unless equipment is used to collect the cleaning compounds and to reasonably minimize their evaporation to the atmosphere.
(d) Use of all reasonable techniques for controlling evaporation during handling, storage, use, and disposal of VOC and materials containing VOC listed in **Condition E64-2**.

TAPCR 1200-03-18-.06

Compliance Method: Annual certification of compliance.

75-0155-95	Frame Welding Process. Consisting of Lines A, B, C (long wheel added) and Associated Sub-Assembly Operations. Six (6) Cartridge Dust/Fume Collectors on Lines A and B. Line C does not have a control device.
Condition E65-1 applies to source 75-0155-95.	

E65-1. Particulate matter (TSP) emitted from this source (75-0155-95) shall not exceed 1.0 pound per hour (lb/hr).

TAPCR 1200-03-07-.01(5); Agreement letter dated July 17, 2003.

Compliance Method: Compliance with this emission limitation shall be assured by maintaining minimum pressure drops as follows:

Dust Collector	Pressure drop (inches of water)
1	0.7
2	0.7
3	0.7
4	0.7
5	0.7
6	0.7

The pressure drop for each dust collector shall be recorded once daily when the source is in operation. The days when the source does not operate shall be noted.

For lower pressure drop reading(s) resulting from replacement of filters, the permittee shall record the deviation(s) as such in their daily records. Due allowance will be made for lower pressure drop reading(s) which follow replacement of filters provided the permittee establishes to the satisfaction of the Technical Secretary that these lower readings resulted from the replacement of filters.

The source(s) controlled by the air pollution control device(s) shall not operate unless the control device(s) is in operation. In the event a malfunction/failure of a control device(s) occurs, the operation of the process(es) controlled by the control device(s) shall be regulated by the provisions of Chapter 1200-03-20 of the Tennessee Air Pollution Control Regulations. Line C (Long Wheel Base Sub-Assembly Line) is not required to have a control device in operation.

75-0155-26	WWL Preparation Platforms (4) and Spray Booths with Ovens (2) and Underbody Coating Operation BACT, Exhaust Filter Control Address: 626 Enon Springs Rd, Smyrna (Former ESR 75-0209-01)
Conditions E66-1 through E66-6 apply to source 75-0155-26.	

E66-1. Volatile organic compound (VOC) emitted from this source (75-0155-26) shall not exceed 8.4 tons during all intervals of 12 consecutive months and the VOC content shall not exceed the following:

Source ID	Material	VOC Content lb VOC/gallon (as applied)
Two Spray Booths	Coating	5.8
Two Spray Booths	Clean-up solvent	6.5
Four prep platforms	Coating	6.5
Four prep platforms	Clean-up solvent	6.5

TAPCR 1200-03-09-.01(5)(b)2.(ii)

Compliance Method: The permittee shall assure compliance with the annual VOC emission limitation by calculating the total VOC emitted from this source during each calendar month and each interval of 12 consecutive calendar months and maintaining a log that contains the information specified in Attachment 3. The permittee shall assure compliance with the VOC content limitation by calculating the monthly volume weighted average mass of VOC per volume of coating as applied and maintaining a log that contains the information specified in Attachment 3. The VOC content of all VOC-containing process materials used by this source shall be determined by using safety data sheets (SDS), EPA Method 24, or manufacturer/vendor formulation data which explicitly list the VOC content by weight (pounds per gallon or weight percent).

E66-2. Particulate matter (PM) emitted from this source (75-0155-26) shall not exceed 2.0 pounds per hour.

TAPCR 1200-03-07-.01(5)

Compliance Method: The permittee shall assure compliance with the emission limitation by using exhaust filters and keeping records. This source shall not operate without the use of exhaust filters during normal operation. The permittee shall keep a log denoting the actual day(s) that filters were replaced.

E66-3. Clean-up solvents must be kept in self-closing containers.

TAPCR 1200-03-09-.01(5)(b)2.(ii)

Compliance Method: Annual certification of compliance.

E66-4. This source shall use high-volume low-pressure (HVLP) spray coating devices at both paint booths at any time these spray booths are in operation.

TAPCR 1200-03-09-.01(5)(b)2.(ii)

Compliance Method: Annual certification of compliance.

E66-5. The permittee shall not use coatings that have a VOC content in excess of the following limits, expressed as pounds of VOC per gallon of coating, as applied, less water and exempt compounds.

Coating	VOC lb/gal
Surface cleaner	1.7
Pretreatment wash primer	6.5
Precoat	5.5
Prime sealer	4.6
Primer/primer surface	4.8
Topcoat	5.2
Metallic/iridescent topcoat	5.2
Extreme performance	6.2
Specialty coating	7.0

The application of specialty coatings, except safety related coatings, shall not exceed 10% of all coatings applied, on a weekly basis.

TAPCR 1200-03-18-.45(4)(a) and (d)

Compliance Method: The permittee shall assure compliance with the emission limitations by keeping records. The permittee shall maintain a current list of all coatings, solvents, reducers, additives, and any other VOC containing material in use at this source. This list shall include the following information: (1) name and appropriate identification of coating, catalyst, hardener, reducer, etc. used; (2) mix ratio of components used; and (3) VOC content of coatings, as applied, less water and exempt solvents, in pounds per gallon. The permittee shall maintain daily records that shall include the following information: (1) identification of applied coatings and (2) quantity of each coating applied. If applicable, the VOC content shall be calculated pursuant to TAPCR 1200-03-18-.45(4)(e). The VOC content of all VOC-containing process materials used by this source shall be determined by using material safety data sheets (MSDS), EPA Method 24, or manufacturer/vendor formulation data which explicitly list the VOC content by weight (pounds per gallon or weight percent).

E66-6. The VOC content of the underbody material shall not exceed 3.5 pounds per gallon, as applied

TAPCR 1200-03-18-.20(3)(b)5.

Compliance Method: The permittee shall assure compliance with the VOC content limitation by calculating the daily volume weighted average mass of VOC per volume of caoting as applied and maintaining a log that contains the information specified in Attachment 3. The VOC content of all VOC-containing process material used by this source shall be determined by using safety data sheets (SDS), EPA Method 24, or manufacturer/vendor formulation data which explicitly lists the VOC content by weight (pounds per gallon or weight percent).

75-0155-83	Gasoline Dispensing Stage II Thermal Oxidizer Control, Stage II Vapor Balance System, or Onboard Vapor Recovery (ORVR)
Conditions E67-1 through E67-7 apply to source 75-0155-83.	

E67-1. The permittee shall comply with the following requirements:

1. All gasoline storage vessels at gasoline dispensing facilities shall be loaded by submerged fill;
2. All vapor lines on the storage vessel shall be equipped with closures that automatically seal upon disconnect;
3. A vapor balance system shall be designed and installed such that, with a vapor-tight line from the gasoline storage tank to the gasoline tank truck, the back pressure in a gasoline tank truck unloading gasoline does not exceed 450 millimeters (mm) (18 inches [in]) of water pressure or 150 mm (5.9 in) of water vacuum;
4. If a gauging well separate from the fill tube is used for manual measurement, it shall be provided with a submerged drop tube that extends to within 150 mm (5.9 in) of the gasoline storage vessel bottom; and
5. Liquid fill connections for all systems shall be equipped with vapor-tight caps.

TAPCR 1200-03-18-.24(3)(a).

Compliance Method: Annual certification of compliance.

E67-2(MM3). The requirements in **Condition E67-3** do not apply to gasoline dispensing operations at this facility that satisfy either paragraph (1), (2), or (3) of this condition. Otherwise, the requirements in **Condition E67-3** do apply to the gasoline dispensing activities.

(1) Dispense gasoline only to motor vehicles that are fitted with an onboard vapor recovery (ORVR) system. TAPCR 1200-03-18-.24(1)(b)3.(iv)

(2) Dispense gasoline at the Wallenius Wilhelmsen Logistics (WWL) tank 826. T.C.A. §68-201-118. Variance granted March 6, 2015. Order No. 42.

(3) Dispense gasoline at the Final Line for vehicles not fitted with an onboard vapor recovery (ORVR) system. T.C.A. §68-201-118. Variance granted November 16, 2015. Order No. 59.

Compliance Method: Annual certification of compliance.

E67-3. The permittee shall comply with the following requirements:

1. All gasoline dispensing shall be by equipment served by a vapor recovery system approved by the Technical Secretary, certified by the California Air Resources Board, and designed, installed, operated, and maintained to recover gasoline vapors displaced during dispensing to automobile fuel tanks, and accessible for inspection and testing;

2. The vapor recovery system shall include for any dispenser and system the following:
   (i) Vapor-tight coaxial hose to conduct vapors captured during dispensing, except on new vehicle fueling lines at motor vehicle assembly plants where vapor-tight dual hose on vacuum assist systems may be employed in lieu of vapor-tight coaxial hose;
   (ii) For balance systems:
      (I) Installation of piping between the dispenser and the vapor collection tank which precludes liquid blockage in the piping; and
      (II) No device which inhibits immediate testing for dynamic backpressure;
   (iii) For vacuum assist systems, sufficient vacuum to prevent escape of gasoline vapors during dispensing;
   (iv) Vapor-tight piping, fittings, caps, couplers, and adapters; and
   (v) Maintenance of vapor tightness throughout the vapor recovery system, except during facility storage tank loading, gauging, and sampling and during maintenance and testing necessitating disruption in the integrity of the system.

3. Use of any aftermarket or rebuilt parts is restricted to parts approved by the California Air Resources Board.

4. Gasoline shall be dispensed from a dispensing unit that satisfies the following:
   (i) Each component required for operation of the System is in place and, to the extent it can be confirmed by sensory inspection, is unimpaired and operational;
   (ii) Each nozzle boot is not torn in either of the following manners:
      (I) Triangular - shaped or similar tear 1/2 inch or more to a side, or hole 1/2inch or more in length; or
      (II) Slit 1 inch or more in length.
   (iii) Each faceplate or flexible cone is not damaged in the following manner:
      (I) For balance nozzles and nozzles for aspirator and eductor assist type systems, damage such that the capability to achieve a seal with a fillpipe interface is diminished for an accumulated total of 1/4 of the circumference of the faceplace; or

(II) For nozzles for vacuum assist systems, more than 1/4 of the flexible cone is missing;
(iv) Each nozzle shutoff mechanism is operational;
(v) Each vacuum producing unit is operational;
(vi) Each vapor processing unit is operational;
(vii) Each fitting, cap, coupler, and adapter is vapor-tight; and
(viii) Each pressure/vacuum relief valve, vapor check valve, and dry break is operational.

5. The owner or operator shall conspicuously display fueling instructions and information in the gasoline dispensing area. These instructions and this information shall describe to customers clearly the proper procedure to be used for fueling vehicles from the dispenser. These instructions and this information shall include instruction about the proper method of reporting system defects first to facility management, and, then if defects are not corrected, to the Technical Secretary. The notice of the method of reporting to the Technical Secretary shall be displayed no earlier than 3 months after and no later than 6 months after the display of the other instructions and information listed above.

TAPCR 1200-03-18-.24(3)(c)

Compliance Method: Annual certification of compliance.

E67-4. The permittee shall comply with the recordkeeping requirements specified in the citation below.

TAPCR 1200-03-18-.24(5)

Compliance Method: Annual certification of compliance.

E67-5. The permittee shall use the test methods as specified in Appendix J, Technical Guidance - Stage II Vapor Recovery Systems for Control of Vehicle Refueling Emissions at Gasoline Dispensing Facilities, Volume II, EPA - 450/3-91-022b (November 1991), to determine compliance with applicable requirements specified in condition 7.(I), unless other compliance methods are approved by the Technical Secretary and the EPA.

TAPCR 1200-03-18-.24(4)

Compliance Method: Annual certification of compliance.

E67-6. The permittee shall demonstrate continued compliance by testing the entire Stage II vapor recovery system within five (5) years of the most recent compliance certification. If a portion or the entire Stage II vapor recovery system is shutdown within five (5) years of the most recent compliance certification, then a compliance certification shall be completed prior to any portion of the system being restarted. The permittee shall provide written notification to the Technical Secretary at least fourteen (14) days prior to the proposed date of testing. The owner or operator shall also test the entire Stage II vapor recovery system within thirty (30) days of any incident which could reasonably be expected to adversely affect the performance of the system. Examples of incidents requiring testing would be excavation near the system piping or the replacement of the system.

TAPCR 1200-03-18-.24(6).

Compliance Method: Annual certification of compliance.

E67-7. The permittee shall report each occurrence of excess emissions to the Technical Secretary within 30 calendar days of becoming aware of such occurrence. Excess emissions shall mean any emissions caused by a deficiency in meeting the standards described in Rule 1200-03-18-.24(3). For purposes of reporting excess emissions for this source, minor tears or slits as described in Rule 1200-03-18-.24(3)(c)4 are not considered to be excess emissions if repaired within 7 days of discovery.

TAPCR 1200-03-18-.04(2).

Compliance Method: Annual certification of compliance.

75-0155-97	Shot Blasting Operation Consisting of Two (2) Shot Blast Units. Cartridge Filter Control
Conditions E68-1 through E68-2 apply to source 75-0155-97.	

E68-1. Particulate matter (PM) emitted from this source (75-0155-97) shall not exceed 0.5 pounds per hour (lb/hr).

TAPCR 1200-03-07-.01(5); Agreement letter dated March 21, 2005.

Compliance Method: The permittee shall assure compliance with the particulate matter emission limit by maintaining the pressure drop across the cartridge filter at or above 0.5 inches of water. The pressure drop for the cartridge filter shall be recorded once daily when the source is in operation. Days when the source is not operating shall be noted. For lower pressure drop reading(s) resulting from replacement of the cartridge filter, the permittee shall record the deviation(s) as such in their daily records. Due allowance will be made for lower pressure drop reading(s) which follow replacement of the cartridge filter provided the permittee establishes to the satisfaction of the Technical Secretary that these lower readings resulted from the replacement of the cartridge filter.

E68-2. This source (75-0155-97) is subject to 40 CFR Part 64-Compliance Assurance Monitoring (CAM) for particulate matter. The following table summarizes the CAM requirements:

Cartridge Filter System

Indicator Type	Differential Pressure Readings and Work Practices.
Measurement Approach	The permittee shall keep a log of daily differential pressure readings across the filters. The permittee shall conduct preventative maintenance and maintenance to maintain the cartridge filter system.
Indicator Range/Indicator Level	The permittee shall maintain the differential pressure at or above the value stated in **Condition E68-1**. An excursion is defined as a force shutdown of blasting operations due to the decrease in pressure drop indicative of filter failure.
QIP Threshold	Not applicable.
Performance Criteria: Data Representativeness	The pressure drop across the baghouse is measured at the baghouse inlet and exhaust.
Performance Criteria: Verification of Operational Status	Not applicable.
QA/QC Practices and Criteria	Pressure gauge calibrated annually.
Monitoring Frequency: Data Collection Procedures	The permittee shall maintain a log of the daily differential pressure reading across the filters. The permittee shall maintain a copy of the manufacturer's specifications for the operation and maintenance of the cartridge filters. The permittee shall keep logs as follows: a log of daily differential pressure readings, a log of routine preventative maintenance and nonroutine maintenance performed on the cartridge filter system.
Monitoring Frequency: Averaging Period	Not applicable.

75-0155-54	Shot Blaster for Paint Line 1 Dust Collector Control
Condition E69-1 through E69-3 apply to source 75-0155-54.	

E69-1. Particulate matter (PM) emitted from this source (75-0155-54) shall not exceed 0.20 pounds per hour.

TAPCR 1200-03-07-.01(5); agreement letter dated December 14, 2012

Compliance Method: The permittee shall assure compliance with the particulate matter emission limit by maintaining the pressure drop across the baghouse at or above 0.4 inches of water. The pressure drop for the baghouse shall be recorded once daily when the source is in operation. Days when the source is not operating shall be noted. For lower pressure drop reading(s) resulting from replacement of bags, the permittee shall record the deviation(s) as such in their daily records. Due allowance will be made for lower pressure drop reading(s) which follow replacement of bags provided the permittee establishes to the satisfaction of the Technical Secretary that these lower readings resulted from the replacement of bags.

E69-2. Visible emissions from this source (75-0155-54) shall not exhibit greater than ten percent (10%) opacity. Visible emissions from this source shall be determined by EPA Method 9, as published in the current 40 CFR 60, Appendix A (six-minute average).

TAPCR 1200-03-05-.01(3) and agreement letter dated December 14, 2012.

Compliance Method: The permittee shall assure compliance with the opacity standard by utilizing the opacity matrix dated June 18, 1996 that is enclosed as Attachment 2.

If the magnitude and frequency of excursions reported by the permittee in the periodic monitoring for emissions is unsatisfactory to the Technical Secretary, this permit may be reopened to impose additional opacity monitoring requirements.

E69-3. This source (75-0155-54) is subject to 40 CFR Part 64-Compliance Assurance Monitoring (CAM) for particulate matter. The following table summarizes the CAM requirements:

Cartridge Filter System

Indicator Type	Differential Pressure Readings and Work Practices.
Measurement Approach	The permittee shall keep a log of daily differential pressure readings across the filters. The permittee shall conduct preventative maintenance and maintenance to maintain the cartridge filter system.
Indicator Range/Indicator Level	The permittee shall maintain the differential pressure at or above the value stated in **Condition E69-1**. An excursion is defined as a force shutdown of blasting operations due to the decrease in pressure drop indicative of filter failure.
QIP Threshold	Not applicable.
Performance Criteria: Data Representativeness	The pressure drop across the baghouse is measured at the baghouse inlet and exhaust.
Performance Criteria: Verification of Operational Status	Not applicable.
QA/QC Practices and Criteria	Pressure gauge calibrated annually.
Monitoring Frequency: Data Collection Procedures	The permittee shall maintain a log of the daily differential pressure reading across the filters. The permittee shall maintain a copy of the manufacturer's specifications for the operation and maintenance of the cartridge filters. The permittee shall keep logs as follows: a log of daily differential pressure readings, a log of routine preventative maintenance and nonroutine maintenance performed on the cartridge filter system.
Monitoring Frequency: Averaging Period	Not applicable.

75-0155-80	Windshield Wiper Fluid Operation This operation consist of one methanol tank. No pollution control equipment
Conditions E70-1 through E70-2 apply to source 75-0155-80.	

E70-1. Volatile Organic Compounds (VOCs) emitted from this source (75-0155-80) shall not exceed 1.0 ton during all intervals of twelve consecutive months.

TAPCR 1200-03-07-.07(2)

Compliance Method: The potential to emit VOC's from this source is less than five tons per year. In accordance with TAPCR 1200-03-9-.04(5)(c)3. and by annual certification of compliance, the permittee shall be considered to meet the monitoring and related recordkeeping and reporting requirements of TAPCR 1200-03-9-.02(11)(e)3.(i). The permittee shall submit annually a compliance certification for VOC from this source.

E70-2. This source is subject to the National Emission Standards for Hazardous Air Pollutants: Organic Liquids Distribution (Non-Gasoline) (40 CFR 63, Subpart EEEE).

40 CFR Part 63, Subpart EEEE

Compliance Method: The permittee shall comply with **Conditions E5-1, E5-2, and E5-3**.

75-0155-52	Natural Gas Fuel Burning Sources This source includes the natural gas fuel burning sources in the Paint Line 1 and Fascia Paint Line 1. NESHAP (subpart DDDDD)
Conditions E71-1 through E71-15 apply to source 75-0155-52.	

E71-1. This source (75-0155-52) consists of the natural gas fuel burning units listed below. This source includes the natural gas fuel burning units that are permittable units and those units that would otherwise be classified as an "insignificant activity" or "insignificant emission unit".

Registration Number	Paint Line 1 Combustion Equipment	NOx Emission Limit (lb/MMscf)	Furnace Type	Applicable to NESHAP?	Maximum Rated Heat Input (MMBtu/hr)
SO11-S4-INS33	Primer HFO #5	60	Indirect	Yes	2.5
SO11-S4-INS34	Primer HFO #6	60	Indirect	Yes	2.5
SO11-S4-INS35	Primer HFO #6	60	Indirect	Yes	2.5
SO11-S4-INS36	Base HFO #6	60	Indirect	Yes	2.5
SO11-S4-INS37	Topcoat Heat-up #1	60	Indirect	Yes	3.5
SO11-S4-INS38	Topcoat Heat-up #2	60	Indirect	Yes	2.5
SO11-S4-INS39	Topcoat Keep #3	60	Indirect	Yes	2.5
SO11-S4-INS40	Topcoat Keep #4	60	Indirect	Yes	1.35
SO11-S4-INS41	Topcoat Keep #5	60	Indirect	Yes	1.5
SO11-S4-INS42	Topcoat Fresh Air	60	Direct	No - Direct Fired	3.5
SO11-S4-INS43	E-coat Heat Up #2	60	Direct	No - Direct Fired	1.35
SO11-S4-INS44	E-Coat Keep #3	60	Direct	No - Direct Fired	1.35
SO11-S4-INS45	Sealer Heat-Up #2	60	Direct	No - Direct Fired	1.35
SO11-S4-INS46	E-Coat Heat Up #1	60	Direct	No - Direct Fired	2.5
SO11-S4-INS47	E-Coat Keep #4	60	Direct	No - Direct Fired	2.5
SO11-S4-INS48	E-coat Fresh Air	60	Direct	No - Direct Fired	6.5
SO11-S4-INS49	Sealer Keep #3	60	Direct	No - Direct Fired	2.5
SO11-S4-INS50	E-coat Pre-Heat	60	Direct	No - Direct Fired	3.5
SO11-S4-INS51	Sealer Heat-Up #1	60	Direct	No - Direct Fired	3.5
SO11-S4-INS52	Hot Water Generator for PT	60	Indirect	Yes	9
SO11-S4-INS53	Hot Water Generator for ASH	60	Indirect	Yes	9
SO11-S4-INS54	HVAC ASH #1	100	Direct	No - Direct Fired	9.547
SO11-S4-INS55	Clean Room & Paint Mix ASH	100	Direct	No - Direct Fired	5.346
SO11-S4-INS56	HVAC ASH #2	100	Direct	No - Direct Fired	9.547
SO11-S4-INS57	Topcoat #5 Fresh ASH	100	Direct	No - Direct Fired	4.93
SO11-S4-INS58	Topcoat #6 Freash ASH	100	Direct	No - Direct Fired	4.93
SO11-S4-INS59	RTO #1 Booth - Round Duct	60	Direct	No - Direct Fired	8.1
SO11-S4-INS60	RTO #2 Oven - Square Duct	60	Direct	No - Direct Fired	8.1
SO11-S4-SGN01	Working Area ASH	100	Direct	No - Direct Fired	16.936

E71-1. (continued)

Registration Number	Fascia Paint Line 1 Combustion Equipment	NOx Emission Limit (lb/MMscf)	Furnace Type	Applicable to NESHAP?	Maximum Rated Heat Input (MMBtu/hr)
SO11-S5-SGN2	Fascia Paint Line 1 P1 Air House	100	Direct	No - Direct Fired	14.6
SO11-S5-SGN3	Fascia Paint Line 1 P2 Air House	100	Direct	No - Direct Fired	14.6
SO11-S5-SGN4	Fascia Paint Line 1 P3 Air House	100	Direct	No - Direct Fired	14.6
SO11-S5-SGN5	Fascia Paint Line 1 P4 Air House	100	Direct	No - Direct Fired	14.6
SO11-S5-SGN6	Fascia Paint Line 1 P5 Air House	100	Direct	No - Direct Fired	14.6
SO11-S5-SGN7	Fascia Paint Line 1 ASH - C2 ASH P1	100	Direct	No - Direct Fired	14.6
SO11-S5-SGN8	Fascia Paint Line 1 ASH - C2 ASH P2	100	Direct	No - Direct Fired	14.6
SO11-S5-SGN9	Fascia Paint Line 1 ASH - C2 ASH P3	100	Direct	No - Direct Fired	14.6
SO11-S5-SGN10	Fascia Paint Line 1 ASH - C2 ASH P4	100	Direct	No - Direct Fired	14.6
SO11-S5-SGN11	Fascia Paint Line 1 ASH - C2 ASH P5	100	Direct	No - Direct Fired	14.6
SO11-S5-SGN12	Fascia Paint Line 1 ASH - Prime ASH P1	100	Direct	No - Direct Fired	14.6
SO11-S5-SGN13	Fascia Paint Line 1 ASH - Prime ASH P2	100	Direct	No - Direct Fired	14.6
SO11-S5-SGN14	Fascia Paint Line 1 ASH - Prime ASH P3	100	Direct	No - Direct Fired	14.6
SO11-S5-SGN15	Fascia Paint Line 1 ASH - Prime ASH P4	100	Direct	No - Direct Fired	14.6
SO11-S5-INS63	Fascia Paint Line 1 Oven Burner Box	60	Indirect	Yes	5.0
SO11-S5-INS64	Fascia Paint Line 1 Oven	60	Indirect	yes	4.0

E71-2. Only natural gas shall be used as a fuel for this source (75-0155-52).

Compliance Method: Annual certification of compliance.

E71-3. Natural gas usage for this source (75-0155-52) shall not exceed 800,000,000 standard cubic feet (800 MMscf) during all intervals of 12 consecutive months. The 12-consecutive month period begins when this permit is issued and does not include the months prior to permit issuance.

Compliance Method: The permittee shall assure compliance with this limitation by maintaining a log of the monthly natural gas usage and calculating the natural gas usage during each calendar month and each interval of 12 consecutive calendar months and maintaining a log that contains the information specified in Attachment 3.

E71-4. Particulate matter emitted from this source (75-0155-52) shall not exceed 3.04 tons during all intervals of 12 consecutive months. The 12-consecutive month period begins when this permit is issued and does not include the months prior to permit issuance.

TAPCR 1200-03-06-.01(7); Application dated July 2, 2013, and 1200-03-09-.01(4); This limitation is part of a PSD netting analysis.

Compliance Method: The permittee shall assure compliance with this emission limitation by assuring compliance with **Condition E71-3.** Compliance with this emission limitation is based on an emission factor of 7.6 pounds of PM per million cubic feet of natural gas (EPA AP-42, Fifth Edition**,** Section 1.4, July 1998).

E71-5. Sulfur dioxide (SO_2) emitted from this source (75-0155-52) shall not exceed 0.24 tons during all intervals of 12 consecutive months. The 12-consecutive month period begins when this permit is issued and does not include the months prior to permit issuance.

TAPCR 1200-03-14-.01(3); Application dated July 2, 2013.

Compliance Method: The permittee shall assure compliance with this emission limitation by assuring compliance with **Condition E71-3.** Compliance with this emission limitation is based on an emission factor of 0.6 pounds of sulfur dioxide per million cubic feet of natural gas (EPA AP-42, Fifth Edition, Section 1.4, July 1998).

E71-6. Nitrogen oxides (NO_x) emitted from this source (75-0155-52) shall not exceed 34.0 tons during all intervals of 12 consecutive months. The 12-consecutive month period begins when this permit is issued and does not include the months prior to permit issuance.

TAPCR 1200-03-06-.01(7); Application dated July 2, 2013 and 1200-03-09-.01(4); This limitation is part of a PSD netting analysis.

Compliance Method: The permittee shall assure compliance with this emission limitation by assuring compliance with **Condition E71-3,** keeping records, and calculating NOx emissions. Compliance with this emission limitation is based on an emission factor of 100 pounds of nitrogen oxides per million cubic feet of natural gas (EPA AP-42, Fifth Edition**,** Section 1.4, July 1998) and an emission factor of 60 pounds of nitrogen oxides per million cubic feet of natural gas for units using lower-NOx technology. The permittee shall maintain a log of the total monthly natural gas usage, monthly natural gas usage from units using lower-NOx technology, and monthly natural gas usage from other units (not using lower-NOx technology). The permittee shall calculate the total monthly NOx emissions, monthly NOx emissions from units using lower-NOx technology, and monthly NOx emissions from other units (not using lower-NOx technology). The permittee shall calculate the total NOx emissions during each calendar month and each interval of 12 consecutive calendar months and maintaining a log that contains the information specified in Attachment 3.

E71-7. Nitrogen Oxides (NO_x) emitted from this source (75-0155-52) shall not exceed the limits (in lb/MMscf) listed in **Condition E71-1**.

TAPCR 1200-03-06-.03(2) and 1200-03-27-.03(1)(a)

Compliance Method: The permittee shall maintain documentation from the manufacturer that states the NOx emission rate (in pounds NOx per million cubic feet of natural gas) for each fuel burning unit listed in **Condition E71-1**.

E71-8. Carbon monoxide (CO) emitted from this source (75-0155-52) shall not exceed 33.6 tons during all intervals of 12 consecutive months. The 12-consecutive month period begins when this permit is issued and does not include the months prior to permit issuance.

TAPCR 1200-03-06-.01(7); Application dated July 2, 2013.

Compliance Method: The permittee shall assure compliance with this emission limitation by assuring compliance with **Condition E71-3.** Compliance with this emission limitation is based on an emission factor of 84 pounds of carbon monoxide per million cubic feet of natural gas (EPA AP-42, Fifth Edition**,** Section 1.4, July 1998).

E71-9. Volatile organic compounds (VOC) emitted from this source (75-0155-52) shall not exceed 2.2 tons during all intervals of 12 consecutive months. The 12-consecutive month period begins when this permit is issued and does not include the months prior to permit issuance.

TAPCR 1200-03-06-.01(7); Application dated July 2, 2013 and 1200-03-09-.01(4); This limitation is part of a PSD netting analysis.

Compliance Method: The permittee shall assure compliance with this emission limitation by assuring compliance with **Condition E71-3.** Compliance with this emission limitation is based on an emission factor of 5.5 pounds of VOC per million cubic feet of natural gas (EPA AP-42, Fifth Edition**,** Section 1.4, July 1998).

E71-10. Pursuant to 40 CFR §63.7490(b), a boiler or process heater is new if the permittee commences construction of the boiler or process heater after June 4, 2010, and the permittee meets the applicability criteria at the time the permittee commences construction. Pursuant to 40 CFR §63.7495(a), for each new or reconstructed boiler or process heater, the permittee must comply with 40 CFR 63, subpart DDDDD by January 31, 2013, or upon startup of the boiler or process heater, whichever is later.

E71-11. Pursuant to 40 CFR §63.7540(a)(11), for each boiler or process heater that has a heat input capacity of less than 10 million Btu per hour, or meets the definition of limited-use boiler or process heater in 40 CFR §63.7575, the permittee must conduct a biennial tune-up of the boiler or process heater as specified in 40 CFR §63.7540(a)(10)(i) through (a)(10)(vi), as follows, to demonstrate continuous compliance. Pursuant to 40 CFR §63.7540(a)(12), for each boiler or process heater that has a continuous oxygen trim system that maintains an optimum air to fuel ratio, or a heat input capacity of less than or equal to 5 million Btu per hour and the unit is in the units designed to burn gas 1; units designed to burn gas 2 (other); or units designed to burn light liquid subcategories, or meets the definition of limited-use boiler or process heater in 40 CFR §63.7575, the permittee must conduct a tune-up of the boiler or process heater every 5 years as specified in paragraphs (i) through (vi) of this condition to demonstrate continuous compliance. The permittee may delay the burner inspection specified in paragraph (i) of this condition until the next scheduled or unscheduled unit shutdown, but the permittee must inspect each burner at least once every 72 months. Pursuant to 40 CFR §63.7540(a)(13), if the unit is not operating on the required date for a tune-up, the tune-up must be conducted within 30 calendar days of startup.

(i) As applicable, inspect the burner, and clean or replace any components of the burner as necessary (the permittee may delay the burner inspection until the next scheduled unit shutdown). Units that produce electricity for sale may delay the burner inspection until the first outage, not to exceed 36 months from the previous inspection. At units where entry into a piece of process equipment or into a storage vessel is required to complete the tune-up inspections, inspections are required only during planned entries into the storage vessel or process equipment;

(ii) Inspect the flame pattern, as applicable, and adjust the burner as necessary to optimize the flame pattern. The adjustment should be consistent with the manufacturer's specifications, if available;

(iii) Inspect the system controlling the air-to-fuel ratio, as applicable, and ensure that it is correctly calibrated and functioning properly (the permittee may delay the inspection until the next scheduled unit shutdown). Units that produce electricity for sale may delay the inspection until the first outage, not to exceed 36 months from the previous inspection;

(iv) Optimize total emissions of CO. This optimization should be consistent with the manufacturer's specifications, if available, and with any NO_X requirement to which the unit is subject;

(v) Measure the concentrations in the effluent stream of CO in parts per million, by volume, and oxygen in volume percent, before and after the adjustments are made (measurements may be either on a dry or wet basis, as long as it is the same basis before and after the adjustments are made). Measurements may be taken using a portable CO analyzer; and

(vi) Maintain on-site and submit, if requested by the Technical Secretary, an annual report containing the information in paragraphs (vi)(A) through (C) of this condition,

(A) The concentrations of CO in the effluent stream in parts per million by volume, and oxygen in volume percent, measured at high fire or typical operating load, before and after the tune-up of the boiler or process heater;

(B) A description of any corrective actions taken as a part of the tune-up; and

(C) The type and amount of fuel used over the 12 months prior to the tune-up, but only if the unit was physically and legally capable of using more than one type of fuel during that period. Units sharing a fuel meter may estimate the fuel used by each unit.

E71-12. Pursuant to 40 CFR §63.7550(b), for units that are subject only to a requirement to conduct an annual, biennial, or 5-year tune-up according to 40 CFR §63.7540(a)(10), (11) or (12), respectively, and not subject to emission limits or operating limits, the permittee may submit only an annual, biennial, or 5-year compliance report, as applicable, as specified in paragraphs 40 CFR §63.7550(b)(1) through (4), instead of a semiannual compliance report. Pursuant to 40 CFR §63.7550(c)(1), if the facility is subject to the requirements of a tune up, then the permittee must submit a compliance report with the following information:

(i) Company and Facility name and address.

(ii) Process unit information, emissions limitations, and operating parameter limitations.

(iii) Date of report and beginning and ending dates of the reporting period.

(iv) The total operating time during the reporting period.

(v) Include the date of the most recent tune-up for each unit subject to only the requirement to conduct an annual, biennial, or 5-year tune-up according to 40 CFR §63.7540(a)(10), (11), or (12) respectively. Include the date of the most recent burner inspection if it was not done annually, biennially, or on a 5-year period and was delayed until the next scheduled or unscheduled unit shutdown.

E71-13. Pursuant to 40 CFR §63.7555(a), the permittee must keep records according to paragraphs (1) and (2) of this condition.

(1) A copy of each notification and report that the permittee submitted to comply with this 40 CFR 63, subpart DDDDD, including all documentation supporting any Initial Notification or Notification of Compliance Status or semiannual compliance report that the permittee submitted, according to the requirements in 40 CFR §63.10(b)(2)(xiv).

(2) Records of performance tests, fuel analyses, or other compliance demonstrations and performance evaluations as required in 40 CFR §63.10(b)(2)(viii).

E71-14. Pursuant to 40 CFR §63.7560, the permittee's records must be in a form suitable and readily available for expeditious review, according to 40 CFR §63.10(b)(1). As specified in 40 CFR §63.10(b)(1), the permittee must keep each record for 5 years following the date of each occurrence, measurement, maintenance, corrective action, report, or record. The permittee must keep each record on site, or they must be accessible from on site (for example, through a computer network), for at least 2 years after the date of each occurrence, measurement, maintenance, corrective action, report, or record, according to 40 CFR §63.10(b)(1). The permittee can keep the records off site for the remaining 3 years.

E71-15. For fee purposes, the permittee shall calculate emissions of particulate matter (PM), sulfur dioxide (SO_2), volatile organic compounds (VOC), and nitrogen oxide (NO_x). The permittee shall utilize the emission factors listed in the table below. The permittee shall maintain the following log format or an alternative format which readily provides the same required information. NO_x emissions calculated for **Condition E71-6** should be used for fee purposes.

Emission from July 1 to June 30 (Fee Accounting Period)

Pollutant	Emission Factors	Emission Factors Source	Natural Gas Usage (scf/yr)	Emissions (ton/yr)
PM	7.6 lb PM/million cubic feet	AP-42, Section 1.4		
SO_2	0.6 lb SO_2/million cubic feet	AP-42, Section 1.4		
VOC	5.5 lb VOC/million cubic feet	AP-42, Section 1.4		

75-0155-28	Emergency Reciprocating Internal Combustion Engine (RICE) with Generator for Paint Line 1 This source includes one natural gas-fired 467.7 BHP Generac SG300 emergency RICE for Paint Line 1 NSPS (Subpart JJJJ), NESHAP (Subpart ZZZZ)
Conditions E73-1 through E73-16 apply to source 75-0155-28.	

E73-1. This source is subject to the National Emission Standards for Hazardous Air Pollutants for Stationary Reciprocating Internal Combustion Engines (40 CFR Part 63, Subpart ZZZZ). Pursuant to 40 CFR §63.6590(c)(6), this affected source (which is a new emergency stationary RICE located at a major source of HAP emissions with a site rating of less than or equal to 500 brake HP) shall meet the requirements of 40 CFR Part 63 by meeting the requirements of 40 CFR Part 60, Subpart JJJJ. No further requirements apply for this engine under 40 CFR Part 63.

E73-2. This source is subject to the Standards of Performance for Stationary Spark Ignition Internal Combustion Engines (40 CFR Part 60, Subpart JJJJ). The permittee shall comply with 40 CFR Part 60, Subpart JJJJ upon startup.

E73-3. The maximum power output for this engine shall not exceed 300 kilowatts (300 kW).

E73-4. The maximum annual hours of operation for this source (75-0155-28) shall not exceed 500 hours during all intervals of 12 consecutive months. This limitation is established pursuant to the information contained in the application dated July 15, 2011, from the permittee.

Compliance Method: The permittee shall assure compliance with this limitation by maintaining the records required by **Condition E73-13**.

E73-5. Only natural gas shall be used as a fuel for this source (75-0155-28).

Compliance Method: Annual certification of compliance.

E73-6. Particulate matter (PM) emitted from this source (75-0155-28) shall not exceed 0.024 pounds per hour and 0.006 tons during all intervals of 12 consecutive months.

TAPCR 1200-03-07-.01(5) and 1200-03-09-.01(4); This limitation is part of a PSD netting analysis.

Compliance Method: The permittee shall assure compliance with this emission limitation by assuring compliance with **Conditions E73-3 and E73-4.** Compliance with this emission limitation is based on an emission factor of 0.00999 pounds of PM per million British Thermal Units (EPA AP-42, Section 3.2, July 2000).

E73-7. Sulfur dioxide (SO_2) emitted from this source (75-0155-28) shall not exceed 0.002 pounds per hour and 0.0005 tons during all intervals of 12 consecutive months.

TAPCR 1200-03-14-.03(5).

Compliance Method: The permittee shall assure compliance with this emission limitation by assuring compliance with **Conditions E73-3 and E73-4.** Compliance with this emission limitation is based on an emission factor of 0.000588 pounds of SO_2 per million British Thermal Units (EPA AP-42, Section 3.2, July 2000).

E73-8. Carbon monoxide (CO) emitted from this source (75-0155-28) shall not exceed 4.0 grams per horsepower-hour (4.125 lb/hr) and 1.031 tons during all intervals of 12 consecutive months.

40 CFR §60.4233(e)

Compliance Method: The permittee shall assure compliance with this emission limitation by assuring compliance with **Conditions E73-3, E73-4, and E73-11.**

E73-9. Volatile organic compounds (VOCs) emitted from this source (75-0155-28) shall not exceed 1.0 gram per horsepower-hour (1.031 lb/hr) and 0.26 tons during all intervals of 12 consecutive months.

40 CFR §60.4233(e) and TAPCR 1200-03-09-.01(4); This limitation is part of a PSD netting analysis.

Compliance Method: The permittee shall assure compliance with this emission limitation by assuring compliance with **Conditions E73-3, E73-4, and E73-11.**

E73-10. Nitrogen Oxides (NO_X) emitted from this source (75-0155-28) shall not exceed 2.0 grams per horsepower-hour (2.063 lb/hr) and 0.52 tons during all intervals of 12 consecutive months.

40 CFR §60.4233(e) and TAPCR 1200-03-09-.01(4); This limitation is part of a PSD netting analysis.

Compliance Method: The permittee shall assure compliance with this emission limitation by assuring compliance with **Conditions E73-3, E73-4, and E73-11.**

E73-11. The permittee shall comply with either (a) or (b) of this condition:

(a) If the permittee operates and maintains the certified stationary SI internal combustion engine and control device according to the manufacturer's emission-related written instructions, then the permittee shall keep records of conducted maintenance to demonstrate compliance, but no performance testing is required by the permittee.

(b) If the permittee does not operate and maintain the certified stationary SI internal combustion engine and control device according to the manufacturer's emission-related written instructions, the permittee shall keep a maintenance plan and records of conducted maintenance and shall, to the extent practicable, maintain and operate the engine in a manner consistent with good air pollution control practice for minimizing emissions. In addition, the permittee shall conduct an initial performance test to demonstrate compliance. The performance test shall be conducted according to 40 CFR §60.4244.

40 CFR §60.4243(b)

E73-12(MM4). Pursuant to 40 CFR §60.4243(d), the permittee must operate the emergency stationary ICE according to the requirements in paragraphs (1) through (3) of this condition. In order for the engine to be considered an emergency stationary ICE under 40 CFR 60, subpart JJJJ, any operation other than emergency operation, maintenance and testing, and operation in non-emergency situations for 50 hours per year, as described in paragraphs (1) through (3) of this condition, is prohibited. If the permittee does not operate the engine according to the requirements in paragraphs (1) through (3) of this condition, the engine will not be considered an emergency engine under 40 CFR 60, subpart JJJJ and must meet all requirements for non-emergency engines.

(1) There is no time limit on the use of emergency stationary ICE in emergency situations, except as specified in **Condition E73-4**.

(2) The permittee may operate the emergency stationary ICE for any combination of the purposes specified in paragraph (2)(i) of this condition for a maximum of 100 hours per calendar year. Any operation for non-emergency situations as allowed by paragraph (3) of this condition counts as part of the 100 hours per calendar year allowed by this paragraph (2).

(i) Emergency stationary ICE may be operated for maintenance checks and readiness testing, provided that the tests are recommended by federal, state or local government, the manufacturer, the vendor, the regional transmission organization or equivalent balancing authority and transmission operator, or the insurance company associated with the engine. The owner or operator may petition the Technical Secretary for approval of additional hours to be used for maintenance checks and readiness testing, but a petition is not required if the owner or operator maintains records indicating that federal, state, or local standards require maintenance and testing of emergency ICE beyond 100 hours per calendar year.

(3) Emergency stationary ICE may be operated for up to 50 hours per calendar year in non-emergency situations. The 50 hours of operation in non-emergency situations are counted as part of the 100 hours per calendar year for maintenance and testing provided in paragraph (2) of this condition. Except as provided in paragraph (3)(i) of this condition, the 50 hours per year for non-emergency situations cannot be used for peak shaving or non-emergency demand response, or to generate income for a facility to an electric grid or otherwise supply power as part of a financial arrangement with another entity.

(i) The 50 hours per year for non-emergency situations can be used to supply power as part of a financial arrangement with another entity if all of the following conditions are met:

(A) The engine is dispatched by the local balancing authority or local transmission and distribution system operator;

(B) The dispatch is intended to mitigate local transmission and/or distribution limitations so as to avert potential voltage collapse or line overloads that could lead to the interruption of power supply in a local area or region.

(C) The dispatch follows reliability, emergency operation or similar protocols that follow specific NERC, regional, state, public utility commission or local standards or guidelines.

(D) The power is provided only to the facility itself or to support the local transmission and distribution system.

(E) The owner or operator identifies and records the entity that dispatches the engine and the specific NERC, regional, state, public utility commission or local standards or guidelines that are being followed for

dispatching the engine. The local balancing authority or local transmission and distribution system operator may keep these records on behalf of the engine owner or operator.

E73-13(MM4). The permittee must keep monthly records of the hours of operation of the engine that is recorded through the non-resettable hour meter. The permittee must document how many hours are spent for the following categories: (a) emergency operation, as specified in **Condition E73-12**, Paragraph (1), including what classified the operation as emergency; (b) maintenance checks and readiness testing, as specified in **Condition E73-12**, Paragraph (2); and (c) non-emergency operation, as specified in **Condition E73-12**, Paragraph (3). The permittee shall calculate the operating hours during the calendar year. The permittee shall maintain the following log format or an alternative format which readily provides the same required information.

Logs for emergency stationary ICE

Month, Year	Emergency Operation (hr/mon)	Emergency Operation (hr/calendar year)	Maintenance Checks and Readiness Testing (hr/mon)	Maintenance Checks and Readiness Testing (hr/calendar year)	Non-Emergency Operation (hr/mon)	Non-Emergency Operation (hr/calendar year)
		Column A		Column B		Column C
January						
February						
Etc.						
December						

	Add Columns A+B+C	Add Columns B+C	Add Columns C
Limit	500 hours	100 hours	50 Hours
January			
February			
Etc.			
December			

E73-14. Pursuant to 40 CFR §60.4245(a), the permittee must keep records of the information in paragraphs (1) through (4) of this condition.

(1) All notifications submitted to comply with this subpart and all documentation supporting any notification.

(2) Maintenance conducted on the engine.

(3) If the stationary SI internal combustion engine is a certified engine, documentation from the manufacturer that the engine is certified to meet the emission standards and information as required in 40 CFR parts 90, 1048, 1054, and 1060, as applicable.

(4) If the stationary SI internal combustion engine is not a certified engine or is a certified engine operating in a non-certified manner and subject to 40 CFR §60.4243(a)(2), documentation that the engine meets the emission standards.

E73-15. For fee purposes, the permittee shall calculate emissions of particulate matter (PM), sulfur dioxide (SO_2), volatile organic compounds (VOC), and nitrogen oxide (NO_x). The permittee shall utilize the emission factors listed in the table below. The permittee shall utilize the hours of operation from **Condition E73-13**. The permittee shall maintain the following log format or an alternative format which readily provides the same required information.

Emission from July 1 to June 30 (Fee Accounting Period)

Pollutant	Emission Factors	Emission Factors Source	Hours of Operation (hr/yr)	Emissions (ton/yr)
PM	0.00999 lb PM/MMBtu	AP-42, Section 3.2		
SO_2	0.000588 lb SO_2/MMBtu	AP-42, Section 3.2		
VOC	1.0 gram VOC/hp-hr	NSPS Standard		
NO_X	2.0 grams NOx/hp-hr	NSPS Standard		

E73-16(SM2). If this source operates for the purposes specified in paragraph (3) of **Condition E73-12(MM4)**, the permittee must submit an annual report according to the following requirements in (a) through (c) of this condition.

(a) The report must contain the following information:
- (i) Company name and address where the engine is located.
- (ii) Date of the report and beginning and ending dates of the reporting period.
- (iii) Engine site rating and model year.
- (iv) Latitude and longitude of the engine in decimal degrees reported to the fifth decimal place.
- (v) Hours spent for operation for the purposes specified in paragraph (3) of **Condition E73-12 (MM4)**, including the date, start time, and end time for engine operation for the purposes specified in paragraph (3) of **Condition E73-12 (MM4)**. The report must also identify the entity that dispatched the engine and the situation that necessitated the dispatch of the engine.

(b) The first annual report must cover the calendar year 2016 and must be submitted no later than March 31, 2017. Subsequent annual reports for each calendar year must be submitted no later than March 31 of the following calendar year.

(c) The annual report must be submitted electronically using the subpart specific reporting form in the Compliance and Emissions Data Reporting Interface (CEDRI) that is accessed through EPA's Central Data Exchange (CDX) (*www.epa.gov/cdx*). However, if the reporting form specific to this subpart is not available in CEDRI at the time that the report is due, the written report must be submitted to the Technical Secretary at one of the addresses listed below:

By mail:
Division of Air Pollution Control
William R. Snodgrass Tennessee Tower
312 Rosa L. Parks Avenue, 15th Floor
Nashville, TN 37243

Or

By email:
Air.Pollution.Control@tn.gov

40 CFR §60.4245(e)

75-0155-57	Emergency RICE This source includes 15 emergency reciprocating internal combustion engines with generators. NESHAP (Subpart ZZZZ)
Conditions E75-1 through E75-22 apply to source 75-0155-57.	

E75-1. The maximum power output for these engines shall not exceed values in the table below.

Equipment ID #	Equipment Type	Manufacturer	Engine Type	Generator Power Output (kW)	Power Output (hp)
IT978101	Generator	Generac	SI 4SLB	70	140
IT978102	Generator	Generac	SI 4SLB	70	140
IT978103	Generator	Generac	SI 4SLB	70	140
IT978104	Generator	Kholer	SI 4SLB	80	136
IT978105	Generator	Generac	SI 4SLB	70	140
IT978106	Generator	Generac	SI 4SLB	70	140
IT978107	Generator	Kholer	SI 4SLB	80	136
IT978108	Generator	Kholer	SI 4SLB	80	136
IT978109	Generator	Kholer	SI 4SLB	80	136
IT978113	Generator	Kholer	SI 4SLB	200	340
IT978114	Generator	Generac	SI 4SLB	80	140
IT978110	Fire Pump	Cummins	CI	NA	400
IT978110T	Fire Pump	National Diesel (Deutz)	CI	NA	400
IT978111	Generator	Caterpillar	CI	1000	1482
IT978112	Fire Pump	Ford Diesel	CI	NA	30

CI-Compression Ignition, SI-Spark Ignition, 4SLB-4 Stroke Lean Burn

E75-2. In the application dated January 31, 2013, the permittee stated that each of the 15 engines are for emergency purposes. Therefore, based on a EPA guidance memo, the potential emissions were calculated using 500 hours per year.

Compliance Method: This condition is for informational purposes only.

E75-3. Only natural gas shall be used as a fuel for the spark ignition engines. Only diesel and No. 2 fuel oil shall be used as fuels for the compression ignition engines.

Compliance Method: Annual certification of compliance.

E75-4. Particulate matter (PM) emitted from this source (75-0155-57) shall not exceed 0.6 pounds per million British Thermal Units.

TAPCR 1200-03-06-.02(2)(a)

Compliance Method: Compliance with this emission limitation is based on the following emission factors: (1) 0.00999 pounds of PM per million British Thermal Units (EPA AP-42, Section 3.2, July 2000) for spark ignition engines, (2) 0.0022 pounds of PM per horsepower-hour (EPA AP-42, Section 3.3, October 1996) for compression ignition engines less than 600 hp, and (3) 0.0007 pounds of PM per horsepower-hour (EPA AP-42, Section 3.4, October 1996) for compression ignition engines greater than 600 hp.

E75-5. Sulfur dioxide (SO_2) emitted from this source (75-0155-57) shall not exceed 1.73 pounds per hour.

TAPCR 1200-03-14-.03(5).

Compliance Method: The permittee shall assure compliance with this emission limitation by assuring compliance with **Condition E75-1.** Compliance with this emission limitation is based on the following emission factors: (1) 0.000588 pounds of SO_2 per million British Thermal Units (EPA AP-42, Section 3.2, July 2000) for spark ignition engines, (2) 0.00205 pounds of SO_2 per horsepower-hour (EPA AP-42, Section 3.3, October 1996) for compression ignition engines less than 600 hp, and (3) 0.000012135 pounds of SO_2 per horsepower-hour (EPA AP-42, Section 3.4, October 1996) for compression ignition engines greater than 600 hp and use of ultra low sulfur diesel fuel.

E75-6. Carbon monoxide (CO) emitted from this source (75-0155-57) shall not exceed 17.32 pounds per hour.

TAPCR 1200-03-07-.07(2)

Compliance Method: The permittee shall assure compliance with this emission limitation by assuring compliance with **Condition E75-1.** Compliance with this emission limitation is based on the following emission factors: (1) 0.317 pounds of CO per million British Thermal Units (EPA AP-42, Section 3.2, July 2000) for spark ignition engines, (2) 0.00668 pounds of CO per horsepower-hour (EPA AP-42, Section 3.3, October 1996) for compression ignition engines less than 600 hp, and (3) 0.0055 pounds of CO per horsepower-hour (EPA AP-42, Section 3.4, October 1996) for compression ignition engines greater than 600 hp.

E75-7. Volatile organic compounds (VOCs) emitted from this source (75-0155-57) shall not exceed 4.48 pounds per hour.

TAPCR 1200-03-07-.07(2)

Compliance Method: The permittee shall assure compliance with this emission limitation by assuring compliance with **Condition E75-1.** Compliance with this emission limitation is based on the following emission factors: (1) 0.118 pounds of VOC per million British Thermal Units (EPA AP-42, Section 3.2, July 2000) for spark ignition engines, (2) 0.0025141 pounds of VOC per horsepower-hour (EPA AP-42, Section 3.3, October 1996) for compression ignition engines less than 600 hp, and (3) 0.000705 pounds of VOC per horsepower-hour (EPA AP-42, Section 3.4, October 1996) for compression ignition engines greater than 600 hp.

E75-8. Nitrogen oxides (NO_x) emitted from this source (75-0155-57) shall not exceed 107.93 pounds per hour.

TAPCR 1200-03-07-.07(2)

Compliance Method: The permittee shall assure compliance with this emission limitation by assuring compliance with **Condition E75-1.** Compliance with this emission limitation is based on the following emission factors: (1) 4.08 pounds of NO_x per million British Thermal Units (EPA AP-42, Section 3.2, July 2000) for spark ignition engines, (2) 0.031 pounds of NO_x per horsepower-hour (EPA AP-42, Section 3.3, October 1996) for compression ignition engines less than 600 hp, and (3) 0.024 pounds of NO_x per horsepower-hour (EPA AP-42, Section 3.4, October 1996) for compression ignition engines greater than 600 hp.

E75-9. This source is subject to the National Emission Standards for Hazardous Air Pollutants for Stationary Reciprocating Internal Combustion Engines (40 CFR Part 63, Subpart ZZZZ). For each existing stationary CI RICE with a site rating of less than or equal to 500 brake HP located at a major source of HAP emissions, the permittee must comply with the applicable emission limitations and operating limitations no later than May 3, 2013. For each existing stationary SI RICE with a site rating of less than or equal to 500 brake HP located at a major source of HAP emissions, the permittee must comply with the applicable emission limitations and operating limitations no later than October 19, 2013. For each existing stationary CI RICE with a site rating of more than 500 brake HP located at a major source of HAP emissions, the permittee must comply with the applicable emission limitations and operating limitations no later than June 15, 2007.

E75-10. Pursuant to 40 CFR §63.6600(c), for each emergency stationary RICE with a site rating of more than 500 brake HP located at a major source of HAP emissions, the permittee does not need to comply with the emission limitations in Tables 1a, 2a, 2c, and 2d to 40 CFR Part 63, Subpart ZZZZ or operating limitations in Tables 1b and 2b to 40 CFR Part 63, Subpart ZZZZ.

E75-11. Pursuant to 40 CFR §63.6602, for each existing stationary RICE with a site rating of equal to or less than 500 brake HP, the permittee must comply with the requirements in Table 2c to 40 CFR Part 63, Subpart ZZZZ.

For each . . .	The permittee must meet the following requirement, except during periods of startup . . .	During periods of startup the permittee must . . .
1. Emergency stationary CI RICE and black start stationary CI RICE.[1]	a. Change oil and filter every 500 hours of operation or annually, whichever comes first;[2] b. Inspect air cleaner every 1,000 hours of operation or annually, whichever comes first, and replace as necessary; c. Inspect all hoses and belts every 500 hours of operation or annually, whichever comes first, and replace as necessary.[3]	Minimize the engine's time spent at idle and minimize the engine's startup time at startup to a period needed for appropriate and safe loading of the engine, not to exceed 30 minutes, after which time the non-startup emission limitations apply.[3]
6. Emergency stationary SI RICE and black start stationary SI RICE.[1]	a. Change oil and filter every 500 hours of operation or annually, whichever comes first;[2] b. Inspect spark plugs every 1,000 hours of operation or annually, whichever comes first, and replace as necessary; c. Inspect all hoses and belts every 500 hours of operation or annually, whichever comes first, and replace as necessary.[3]	Minimize the engine's time spent at idle and minimize the engine's startup time at startup to a period needed for appropriate and safe loading of the engine, not to exceed 30 minutes, after which time the non-startup emission limitations apply.[3]

[1]If an emergency engine is operating during an emergency and it is not possible to shut down the engine in order to perform the work practice requirements on the schedule required in Table 2c of this subpart, or if performing the work practice on the required schedule would otherwise pose an unacceptable risk under Federal, State, or local law, the work practice can be delayed until the emergency is over or the unacceptable risk under Federal, State, or local law has abated. The work practice should be performed as soon as practicable after the emergency has ended or the unacceptable risk under Federal, State, or local law has abated. Sources must report any failure to perform the work practice on the schedule required and the Federal, State or local law under which the risk was deemed unacceptable.

[2]Sources have the option to utilize an oil analysis program as described in 40 CFR §63.6625(i) or (j) in order to extend the specified oil change requirement in Table 2c of this subpart.

[3]Sources can petition the Administrator pursuant to the requirements of 40 CFR 63.6(g) for alternative work practices.

E75-12. Pursuant to 40 CFR §63.6605(a), the permittee must be in compliance with the emission limitations, operating limitations, and other requirements in 40 CFR Part 63, Subpart ZZZZ that apply to the permittee at all times. Pursuant to 40 CFR §63.6605(b), at all times the permittee must operate and maintain any affected source, including associated air pollution control equipment and monitoring equipment, in a manner consistent with safety and good air pollution control practices for minimizing emissions. The general duty to minimize emissions does not require the permittee to make any further efforts to reduce emissions if levels required by this standard have been achieved. Determination of whether such operation and maintenance procedures are being used will be based on information available to the Technical Secretary which may include, but is not limited to, monitoring results, review of operation and maintenance procedures, review of operation and maintenance records, and inspection of the source.

E75-13. Pursuant to 40 CFR §63.6625(e) and 40 CFR §63.6640(a), for each existing emergency or black start stationary RICE with a site rating of less than or equal to 500 HP located at a major source of HAP emissions, the permittee must operate and maintain the stationary RICE and after-treatment control device (if any) according to the manufacturer's emission-related written instructions or develop your own maintenance plan which must provide to the extent practicable for the maintenance and operation of the engine in a manner consistent with good air pollution control practice for minimizing emissions.

E75-14. Pursuant to 40 CFR §63.6625(f), for each existing emergency stationary RICE with a site rating of less than or equal to 500 brake HP located at a major source of HAP emissions, the permittee must install a non-resettable hour meter if one is not already installed.

E75-15. Pursuant to 40 CFR §63.6625(h), for each existing stationary engine, the permittee must minimize the engine's time spent at idle during startup and minimize the engine's startup time to a period needed for appropriate and safe loading of the engine, not to exceed 30 minutes, after which time the emission standards applicable to all times other than startup in Table 2c to 40 CFR Part 63, Subpart ZZZZ apply.

E75-16. Pursuant to 40 CFR §63.6625(i), for each stationary CI engine that is subject to the work, operation or management practices in item 1 of Table 2c to 40 CFR Part 63, Subpart ZZZZ, the permittee has the option of utilizing an oil analysis program in order to extend the specified oil change requirement in Tables 2c to 40 CFR Part 63, Subpart ZZZZ. The oil analysis must be performed at the same frequency specified for changing the oil in Table 2c to 40 CFR Part 63, Subpart ZZZZ. The analysis program must at a minimum analyze the following three parameters: Total Base Number, viscosity, and percent water content. The condemning limits for these parameters are as follows: Total Base Number is less than 30 percent of the Total Base Number of the oil when new; viscosity of the oil has changed by more than 20 percent from the viscosity of the oil when new; or percent water content (by volume) is greater than 0.5. If all of these condemning limits are not exceeded, the permittee is not required to change the oil. If any of the limits are exceeded, the permittee must change the oil within 2 days of receiving the results of the analysis; if the engine is not in operation when the results of the analysis are received, the permittee must change the oil within 2 days or before commencing operation, whichever is later. The permittee must keep records of the parameters that are analyzed as part of the program, the results of the analysis, and the oil changes for the engine. The analysis program must be part of the maintenance plan for the engine.

E75-17. Pursuant to 40 CFR §63.6625(j), for each stationary SI engine that is subject to the work, operation or management practices in item 6 of Table 2c to 40 CFR Part 63, Subpart ZZZZ, the permittee has the option of utilizing an oil analysis program in order to extend the specified oil change requirement in Table 2c to 40 CFR Part 63, Subpart ZZZZ. The oil analysis must be performed at the same frequency specified for changing the oil in Table 2c to 40 CFR Part 63, Subpart ZZZZ. The analysis program must at a minimum analyze the following three parameters: Total Acid Number, viscosity, and percent water content. The condemning limits for these parameters are as follows: Total Acid Number increases by more than 3.0 milligrams of potassium hydroxide (KOH) per gram from Total Acid Number of the oil when new; viscosity of the oil has changed by more than 20 percent from the viscosity of the oil when new; or percent water content (by volume) is greater than 0.5. If all of these condemning limits are not exceeded, the permittee is not required to change the oil. If any of the limits are exceeded, the permittee must change the oil within 2 business days of receiving the results of the analysis; if the engine is not in operation when the results of the analysis are received, the permittee must change the oil within 2 business days or before commencing operation, whichever is later. The permittee must keep records of the parameters that are analyzed as part of the program, the results of the analysis, and the oil changes for the engine. The analysis program must be part of the maintenance plan for the engine.

E75-18. Pursuant to 40 CFR §63.6640(b), the permittee must report each instance in which the permittee did not meet each emission limitation or operating limitation in Table 2c to 40 CFR Part 63, Subpart ZZZZ that apply to the permittee. These instances are deviations from the emission and operating limitations in 40 CFR Part 63, Subpart ZZZZ. These deviations must be reported according to the requirements in 40 CFR §63.6650.

E75-19(MM4). Pursuant to 40 CFR §63.6640(f), the permittee must operate the emergency stationary RICE according to the requirements in paragraphs (1) through (3) of this condition. In order for the engine to be considered an emergency stationary RICE under this subpart, any operation other than emergency operation, maintenance and testing, and operation in non-emergency situations for 50 hours per year, as described in paragraphs (1) through (3) of this condition, is prohibited. If you do not operate the engine according to the requirements in paragraphs (1) through (3) of this condition, the engine will not be considered an emergency engine under this subpart and must meet all requirements for non-emergency engines.

(1) There is no time limit on the use of emergency stationary RICE in emergency situations.

(2) The permittee may operate the emergency stationary RICE for any combination of the purposes specified in paragraph (2)(i) of this condition for a maximum of 100 hours per calendar year. Any operation for non-emergency situations as allowed by paragraphs (3) of this condition counts as part of the 100 hours per calendar year allowed by this paragraph (f)(2).

(i) Emergency stationary RICE may be operated for maintenance checks and readiness testing, provided that the tests are recommended by federal, state or local government, the manufacturer, the vendor, the regional transmission organization or equivalent balancing authority and transmission operator, or the insurance company associated with the engine. The owner or operator may petition the Administrator for approval of additional hours to be used for maintenance checks and readiness testing, but a petition is not required if the owner or operator maintains records indicating that federal, state, or local standards require maintenance and testing of emergency RICE beyond 100 hours per calendar year.

(3) Emergency stationary RICE located at major sources of HAP may be operated for up to 50 hours per calendar year in non-emergency situations. The 50 hours of operation in non-emergency situations are counted as part of the 100 hours per calendar year for maintenance and testing provided in paragraph (2) of this condition. The 50 hours per year for non-emergency situations cannot be used for peak shaving or non-emergency demand response, or to generate income for a facility to supply power to an electric grid or otherwise supply power as part of a financial arrangement with another entity.

E75-20(MM4). The permittee must keep monthly records of the hours of operation of the engine that is recorded through the non-resettable hour meter. The permittee must document how many hours are spent for the following categories: (1) emergency operation, including what classified the operation as emergency, (2) maintenance checks and readiness testing and (3) non-emergency operation. The permittee shall calculate the operating hours during the calendar year. The permittee shall maintain the following log format or an alternative format which readily provides the same required information.

Log for each emergency stationary ICE

Month, Year	Emergency Operation (hr/mon)	Emergency Operation (hr/calendar year)	Maintenance Checks, Readiness Testing, Demand Response (hr/mon)	Maintenance Checks, Readiness Testing, Demand Response (hr/calendar year)	Non-Emergency Operation (hr/mon)	Non-Emergency Operation (hr/calendar year)
		Column A		Column B		Column C
January						
February						
Etc.						
December						

	Add Columns B+C	Add Columns C
Limit	100 hours	50 Hours
January		
February		
Etc.		
December		

E75-21. For fee purposes, the permittee shall calculate emissions of particulate matter (PM), sulfur dioxide (SO_2), volatile organic compounds (VOC), and nitrogen oxide (NO_x). The permittee shall utilize the emission factors listed in the table below. The permittee shall maintain the following log format or an alternative format which readily provides the same required information.

Emission from July 1 to June 30 (Fee Accounting Period)

Pollutant	Emission Factors for SI 4SLB	Emission Factors Source	Hours of Operation (hr/yr)	Emissions (ton/yr)
PM	0.00999 lb PM/MMBtu	AP-42, Section 3.2		
SO_2	0.000588 lb SO_2/MMBtu	AP-42, Section 3.2		
VOC	0.118 lb VOC/MMBtu	AP-42, Section 3.2		
NO_X	4.08 lb NOx/MMBtu	AP-42, Section 3.2		

Emission from July 1 to June 30 (Fee Accounting Period)

Pollutant	Emission Factors for CI less than 600 hp	Emission Factors Source	Hours of Operation (hr/yr)	Emissions (ton/yr)
PM	0.0022 lb PM/hp-hr	AP-42, Section 3.3		
SO_2	0.00205 lb SO2/hp-hr	AP-42, Section 3.3		
VOC	0.0025141 lb VOC/hp-hr	AP-42, Section 3.3		
NO_X	0.031 lb NOx/hp-hr	AP-42, Section 3.3		

Emission from July 1 to June 30 (Fee Accounting Period)

Pollutant	Emission Factors for CI greater than 600 hp	Emission Factors Source	Hours of Operation (hr/yr)	Emissions (ton/yr)
PM	0.0007 lb PM/hp-hr	AP-42, Section 3.4		
SO_2	0.0000121 lb SO2/hp-hr	AP-42, Section 3.4		
VOC	0.000705 lb VOC/hp-hr	AP-42, Section 3.4		
NO_X	0.024 lb NOx/hp-hr	AP-42, Section 3.4		

E75-22(SM2). For each emergency stationary RICE with a site rating of more than 100 brake HP that operates for the purposes specified in paragraph (3) of **Condition E75-19(MM4)**, the permittee must submit an annual report according to the following requirements in (a) through (c) of this condition.

(a) The report must contain the following information:
- (i) Company name and address where the engine is located.
- (ii) Date of the report and beginning and ending dates of the reporting period.
- (iii) Engine site rating and model year.
- (iv) Latitude and longitude of the engine in decimal degrees reported to the fifth decimal place.
- (v) Hours spent for operation for the purposes specified in paragraph (3) of **Condition E75-19(MM4)**, including the date, start time, and end time for engine operation for the purposes specified in paragraph (3) of **Condition E75-19(MM4)**. The report must also identify the entity that dispatched the engine and the situation that necessitated the dispatch of the engine.

(b) The first annual report must cover the calendar year 2016 and must be submitted no later than March 31, 2017. Subsequent annual reports for each calendar year must be submitted no later than March 31 of the following calendar year.

(c) The annual report must be submitted electronically using the subpart specific reporting form in the Compliance and Emissions Data Reporting Interface (CEDRI) that is accessed through EPA's Central Data Exchange (CDX) (*www.epa.gov/cdx*). However, if the reporting form specific to this subpart is not available in CEDRI at the time that the report is due, the written report must be submitted to the Technical Secretary at one of the addresses listed below:

By mail:
Division of Air Pollution Control
William R. Snodgrass Tennessee Tower
312 Rosa L. Parks Avenue, 15th Floor
Nashville, TN 37243

Or

By email:
Air.Pollution.Control@tn.gov

40 CFR §63.6650(h)

75-0155-103	One Diesel-Fired Emergency Reciprocating Internal Combustion Engine with Fire Pump for Integrated Logistics Center (ILC) NSPS (Subpart IIII), NESHAP (Subpart ZZZZ)
Conditions E76-1 through E76-16 apply to source 75-0155-103.	

E76-1(SM2). This source is subject to the Standards of Performance for Stationary Compression Ignition Internal Combustion Engines (40 CFR Part 60, Subpart IIII). The permittee shall comply with 40 CFR Part 60, Subpart IIII upon startup.

E76-2(SM2). This source is subject to the National Emission Standards for Hazardous Air Pollutants for Stationary Reciprocating Internal Combustion Engines (40 CFR Part 63, Subpart ZZZZ). The permittee shall meet the requirements of 40 CFR part 63, subpart ZZZZ, by meeting the requirements of 40 CFR part 60, subpart IIII. No further requirements apply for the emergency engine under 40 CFR part 63, subpart ZZZZ.

E76-3(SM2). The rated power output was stated to be 260 horsepower (260 Hp).

TAPCR 1200-03-09-.02(11)(f)5.(ii)(II); application dated June 16, 2016

E76-4(SM2). Only No. 2 fuel oil and diesel fuel shall be used as fuels for this source.

TAPCR 1200-03-14-.03(5)

E76-5(SM2). Particulate Matter (PM) emitted from this source (75-0155-103) shall not exceed 0.20 grams per kilowatt-hour (0.09 lb/hr).

40 CFR §60.4205(c)

Compliance Method: The permittee shall assure compliance with this emission limitation by assuring compliance with **Conditions E76-3(SM2), E76-9(SM2), E76-12(SM2), and E76-13(SM2).**

E76-6(SM2). Sulfur Dioxide (SO_2) emitted from this source (75-0155-103) shall not exceed 0.54 pounds per hour.

TAPCR 1200-03-14-.03(5)

Compliance Method: The permittee shall assure compliance with this emission limitation by assuring compliance with **Conditions E76-3(SM2) and E76-10(SM2).** Compliance with this emission limitation is based on an emission factor of 0.00205 pounds of SO_2 per horsepower-hour (EPA AP-42, Section 3.3, October 1996).

E76-7(SM2). Carbon Monoxide (CO) emitted from this source (75-0155-103) shall not exceed 3.5 grams per kilowatt-hour (1.50 lb/hr).

40 CFR §60.4205(c)

Compliance Method: The permittee shall assure compliance with this emission limitation by assuring compliance with **Conditions E76-3(SM2), E76-9(SM2), E76-12(SM2), and E76-13(SM2).**

E76-8(SM2). Non-Methane Hydrocarbons and Nitrogen Oxides (NMHC + NO_X) emitted from this source (75-0155-103) shall not exceed 4.0 grams per kilowatt-hour (1.72 lb/hr).

40 CFR §60.4205(c)

Compliance Method: The permittee shall assure compliance with this emission limitation by assuring compliance with **Conditions E76-3(SM2), E76-9(SM2), E76-12(SM2), and E76-13(SM2).**

E76-9(SM2). Owners and operators of stationary CI ICE must operate and maintain stationary CI ICE that achieve the emission standards as required in 40 CFR §60.4205 over the entire life of the engine.

40 CFR §60.4206

E76-10(SM2). The permittee shall use diesel fuel that meets the requirements of 40 CFR 80.510(b), as follows:

(1) Sulfur content shall not exceed 15 ppm maximum for nonroad diesel fuel.
(2) Cetane index or aromatic content, as follows:
  (i) A minimum cetane index of 40; or
  (ii) A maximum aromatic content of 35 volume percent.

40 CFR §60.4207(b)

E76-11(SM2). Pursuant to 40 CFR §60.4209(a), for each emergency stationary CI internal combustion engine that does not meet the standards applicable to non-emergency engines, the permittee must install a non-resettable hour meter prior to startup of the engine.

E76-12(SM2). The permittee must do all of the following, except as permitted under paragraph (4) of this condition:

(1) Operate and maintain the stationary CI internal combustion engine and control device according to the manufacturer's emission-related written instructions;

(2) Change only those emission related settings that are permitted by the manufacturer; and

(3) Meet the requirements of 40 CFR parts 89, 94 and/or 1068, as they apply to the permittee.

(4) If the permittee does not install, configure, operate, and maintain the engine and control device according to the manufacturer's emission-related written instructions, or the permittee changes emission related settings in a way that is not permitted by the manufacturer, the permittee must demonstrate compliance as follows:

(i) The permittee must keep a maintenance plan and records of conducted maintenance and must, to the extent practicable, maintain and operate the engine in a manner consistent with good air pollution control practice for minimizing emissions. In addition, the permittee must conduct an initial performance test to demonstrate compliance with the applicable emission standards within 1 year of startup, or within 1 year after an engine and control device is no longer installed, configured, operated, and maintained in accordance with the manufacturer's emission-related written instructions, or within 1 year after you change emission-related settings in a way that is not permitted by the manufacturer.

40 CFR §60.4211(a)

E76-13(SM2). The permittee shall comply with the PM, CO, and (NMHC + NOx) emission limitations by purchasing an engine certified to the emission standards in 40 CFR §60.4205(c) based on the model year and NFPA nameplate engine power. The permittee shall maintain a record of this certification. The engine shall be installed and configured according to the manufacturer's emission-related specifications, except as permitted in paragragh (4) of **Condition E76-12(SM2)** of this permit.

40 CFR §60.4211(c)

E76-14(SM2). The permittee must operate the emergency stationary ICE according to the requirements in paragraphs (1) through (2) of this condition. In order for the engine to be considered an emergency stationary ICE under 40 CFR 60, subpart IIII, any operation other than emergency operation, maintenance and testing, as described in paragraphs (1) through (2) of this condition, is prohibited. If the permittee does not operate the engine according to the requirements in paragraphs (1) through (2) of this condition, the engine will not be considered an emergency engine under this subpart and must meet all requirements for non-emergency engines.

(1) There is no time limit on the use of emergency stationary ICE in emergency situations.

(2) The permittee may operate your emergency stationary ICE for any combination of the purposes specified in paragraph (2)(i) of this condition for a maximum of 100 hours per calendar year.

(i) Emergency stationary ICE may be operated for maintenance checks and readiness testing, provided that the tests are recommended by federal, state or local government, the manufacturer, the vendor, the regional transmission organization or equivalent balancing authority and transmission operator, or the insurance company associated with the engine. The owner or operator may petition the Technical Secretary for approval of additional hours to be used for maintenance checks and readiness testing, but a petition is not required if the owner or operator maintains records indicating that federal, state, or local standards require maintenance and testing of emergency ICE beyond 100 hours per calendar year.

40 CFR §60.4211(f)

E76-15(SM2). The permittee must keep monthly records of the hours of operation of the engine that is recorded through the non-resettable hour meter. The permittee must document how many hours are spent for the following categories: (a) emergency operation, as specified in **Condition E76-14(SM2)**, Paragraph (1), including what classified the operation as emergency; (b) maintenance checks and readiness testing, as specified in **Condition E76-14(SM2)**, Paragraph (2); and (c) non-emergency operation, as specified in **Condition E76-14(SM2)**, Paragraph (3). The permittee shall calculate the operating hours during the calendar year. The permittee shall maintain the following log format or an alternative format which readily provides the same required information.

Logs for each emergency stationary RICE

Month, Year	Emergency Operation (hr/mon)	Emergency Operation (hr/calendar year)	Maintenance Checks and Readiness Testing (hr/mon)	Maintenance Checks and Readiness Testing (hr/calendar year)	Non-Emergency Operation (hr/mon)	Non-Emergency Operation (hr/calendar year)
				Column A		Column B
January						
February						
Etc.						
December						

	Add Columns A + B	Add Column B
Limit	100 hours	50 hours
January		
February		
Etc.		
December		

TAPCR 1200-03-10-.04(2)(b)

E76-16(SM2). For fee purposes, the permittee shall calculate emissions of particulate matter (PM), sulfur dioxide (SO_2), and nitrogen oxide (NO_x). The permittee shall utilize the emission factors listed in the table below. The permittee shall utilize the hours of operation from **Condition E76-15(SM2)**. The permittee shall maintain the following log format or an alternative format which readily provides the same required information.

Emission from July 1 to June 30 (Fee Accounting Period)

Pollutant	Emission Factors	Emission Factors Source	Hours of Operation (hr/yr)	Emissions (ton/yr)
PM	0.20 grams PM/kw-hr	NSPS standard		
SO_2	0.00205 lb SO2/MMBtu	AP-42, Section 3.3		
NMHC + NO_X	4.0 grams NOx/kw-hr	NSPS standard		

TAPCR 1200-03-26-.02(9)(g)2.(ii)

75-0155-99	One Diesel-Fired Emergency Reciprocating Internal Combustion Engine with Generator for Integrated Logistics Center (ILC) NSPS (Subpart IIII), NESHAP (Subpart ZZZZ)
Conditions E77-1 through E77-18 apply to source 75-0155-99.	

E77-1(SM2). This source is subject to the Standards of Performance for Stationary Compression Ignition Internal Combustion Engines (40 CFR Part 60, Subpart IIII). The permittee shall comply with 40 CFR Part 60, Subpart IIII upon startup.

E77-2(SM2). This source is subject to the National Emission Standards for Hazardous Air Pollutants for Stationary Reciprocating Internal Combustion Engines (40 CFR Part 63, Subpart ZZZZ). The permittee shall meet the requirements of 40 CFR part 63, subpart ZZZZ, by meeting the requirements of 40 CFR part 60, subpart IIII. No further requirements apply for the emergency engine under 40 CFR part 63, subpart ZZZZ.

E77-3(SM2). The rated power output was stated to be 480 horsepower (480 Hp).

TAPCR 1200-03-09-.02(11)(f)5.(ii)(II); application dated July 14, 2016

E77-4(SM2). Only No. 2 fuel oil and diesel fuel shall be used as fuels for this source.

TAPCR 1200-03-14-.03(5)

E77-5(SM2). Particulate Matter (PM) emitted from this source (75-0155-99) shall not exceed 0.20 grams per kilowatt-hour (0.16 lb/hr).

40 CFR §60.4205(b)

Compliance Method: The permittee shall assure compliance with this emission limitation by assuring compliance with **Conditions E77-3(SM2), E77-10(SM2), E77-13(SM2), and E77-14(SM2).**

E77-6(SM2). Sulfur Dioxide (SO_2) emitted from this source (75-0155-99) shall not exceed 0.99 pounds per hour.

TAPCR 1200-03-14-.03(5)

Compliance Method: The permittee shall assure compliance with this emission limitation by assuring compliance with **Conditions E77-3(SM2) and E77-11(SM2).** Compliance with this emission limitation is based on an emission factor of 0.00205 pounds of SO_2 per horsepower-hour (EPA AP-42, Section 3.3, October 1996).

E77-7(SM2). Carbon Monoxide (CO) emitted from this source (75-0155-99) shall not exceed 3.5 grams per kilowatt-hour (2.76 lb/hr).

40 CFR §60.4205(b)

Compliance Method: The permittee shall assure compliance with this emission limitation by assuring compliance with **Conditions E77-3(SM2), E77-10(SM2), E77-13(SM2), and E77-14(SM2).**

E77-8(SM2). Non-Methane Hydrocarbons and Nitrogen Oxides (NMHC + NO_X) emitted from this source (75-0155-99) shall not exceed 4.0 grams per kilowatt-hour (3.16 lb/hr).

40 CFR §60.4205(b)

Compliance Method: The permittee shall assure compliance with this emission limitation by assuring compliance with **Conditions E77-3(SM2), E77-10(SM2), E77-13(SM2), and E77-14(SM2).**

E77-9(SM2). Visible emissions from this source (75-0155-99) shall not exceed the following:

d) Twenty percent (20%) opacity during the acceleration mode;
e) Fifteen percent (15%) opacity during the lugging mode; and
f) Fifty percent (50%) opacity during the peaks in either the acceleration or lugging modes.

The engine manufacturer is responsible for testing. Opacity levels are to be measured and calculated as set forth in 40 CFR part 86, subpart I. Notwithstanding the provisions of 40 CFR part 86, subpart I, two-cylinder nonroad engines may be tested using an exhaust muffler that is representative of exhaust mufflers used with the engines in use.

40 CFR §60.4205(b); 40 CFR §60.4202(a)(2); and 40 CFR §89.113(a) and (b)

E77-10(SM2). Owners and operators of stationary CI ICE must operate and maintain stationary CI ICE that achieve the emission standards as required in 40 CFR §60.4205 over the entire life of the engine.

40 CFR §60.4206

E77-11(SM2). The permittee shall use diesel fuel that meets the requirements of 40 CFR 80.510(b), as follows:

(1) Sulfur content shall not exceed 15 ppm maximum for nonroad diesel fuel.
(2) Cetane index or aromatic content, as follows:
  (i) A minimum cetane index of 40; or
  (ii) A maximum aromatic content of 35 volume percent.

40 CFR §60.4207(b)

E77-12(SM2). Pursuant to 40 CFR §60.4209(a), for each emergency stationary CI internal combustion engine that does not meet the standards applicable to non-emergency engines, the permittee must install a non-resettable hour meter prior to startup of the engine.

E77-13(SM2). The permittee must do all of the following, except as permitted under paragraph (4) of this condition:

(1) Operate and maintain the stationary CI internal combustion engine and control device according to the manufacturer's emission-related written instructions;
(2) Change only those emission related settings that are permitted by the manufacturer; and
(3) Meet the requirements of 40 CFR parts 89, 94 and/or 1068, as they apply to the permittee.
(4) If the permittee does not install, configure, operate, and maintain the engine and control device according to the manufacturer's emission-related written instructions, or the permittee changes emission related settings in a way that is not permitted by the manufacturer, the permittee must demonstrate compliance as follows:
  (i) The permittee must keep a maintenance plan and records of conducted maintenance and must, to the extent practicable, maintain and operate the engine in a manner consistent with good air pollution control practice for minimizing emissions. In addition, the permittee must conduct an initial performance test to demonstrate compliance with the applicable emission standards within 1 year of startup, or within 1 year after an engine and control device is no longer installed, configured, operated, and maintained in accordance with the manufacturer's emission-related written instructions, or within 1 year after you change emission-related settings in a way that is not permitted by the manufacturer.

40 CFR §60.4211(a)

E77-14(SM2). The permittee shall comply with the PM, CO, and (NMHC + NOx) emission limitations by purchasing an engine certified to the emission standards in 40 CFR §60.4205(b) based on the model year and maximum engine power. The permittee shall maintain a record of this certification. The engine shall be installed and configured according to the manufacturer's emission-related specifications, except as permitted in paragragh (4) of **Condition E77-13(SM2)** of this permit.

40 CFR §60.4211(c)

E77-15(SM2). The permittee must operate the emergency stationary ICE according to the requirements in paragraphs (1) through (3) of this condition. In order for the engine to be considered an emergency stationary ICE under 40 CFR 60, subpart IIII, any operation other than emergency operation, maintenance and testing, and operation in non-emergency situations for 50 hours per year, as described in paragraphs (1) through (3) of this condition, is prohibited. If the permittee does not operate the engine according to the requirements in paragraphs (1) through (3) of this condition, the engine will not be considered an emergency engine under this subpart and must meet all requirements for non-emergency engines.

(1) There is no time limit on the use of emergency stationary ICE in emergency situations.
(2) The permittee may operate your emergency stationary ICE for any combination of the purposes specified in paragraph (2)(i) of this condition for a maximum of 100 hours per calendar year. Any operation for non-emergency situations as allowed by paragraph (3) of this condition counts as part of the 100 hours per calendar year allowed by this paragraph (2).
  (i) Emergency stationary ICE may be operated for maintenance checks and readiness testing, provided that the tests are recommended by federal, state or local government, the manufacturer, the vendor, the regional transmission organization or equivalent balancing authority and transmission operator, or the insurance company associated with the engine. The owner or operator may petition the Technical Secretary for approval of additional hours to be used for maintenance checks and readiness testing, but a petition is not required if the owner or operator maintains records indicating that federal, state, or local standards require maintenance and testing of emergency ICE beyond 100 hours per calendar year.
(3) Emergency stationary ICE may be operated for up to 50 hours per calendar year in non-emergency situations. The 50 hours of operation in non-emergency situations are counted as part of the 100 hours per calendar year for maintenance

and testing provided in paragraph (2) of this condition. Except as provided in paragraph (3)(i) of this condition, the 50 hours per calendar year for non-emergency situations cannot be used for peak shaving or non-emergency demand response, or to generate income for a facility to an electric grid or otherwise supply power as part of a financial arrangement with another entity.

(i) The 50 hours per year for non-emergency situations can be used to supply power as part of a financial arrangement with another entity if all of the following conditions are met:

(A) The engine is dispatched by the local balancing authority or local transmission and distribution system operator;

(B) The dispatch is intended to mitigate local transmission and/or distribution limitations so as to avert potential voltage collapse or line overloads that could lead to the interruption of power supply in a local area or region.

(C) The dispatch follows reliability, emergency operation or similar protocols that follow specific NERC, regional, state, public utility commission or local standards or guidelines.

(D) The power is provided only to the facility itself or to support the local transmission and distribution system.

(E) The owner or operator identifies and records the entity that dispatches the engine and the specific NERC, regional, state, public utility commission or local standards or guidelines that are being followed for dispatching the engine. The local balancing authority or local transmission and distribution system operator may keep these records on behalf of the engine owner or operator.

40 CFR §60.4211(f)

E77-16(SM2). The permittee must keep monthly records of the hours of operation of the engine that is recorded through the non-resettable hour meter. The permittee must document how many hours are spent for the following categories: (a) emergency operation, as specified in **Condition E77-15(SM2)**, Paragraph (1), including what classified the operation as emergency; (b) maintenance checks and readiness testing, as specified in **Condition E77-15(SM2)**, Paragraph (2); and (c) non-emergency operation, as specified in **Condition E77-15(SM2)**, Paragraph (3). The permittee shall calculate the operating hours during the calendar year. The permittee shall maintain the following log format or an alternative format which readily provides the same required information.

Logs for each emergency stationary RICE

Month, Year	Emergency Operation (hr/mon)	Emergency Operation (hr/calendar year)	Maintenance Checks and Readiness Testing (hr/mon)	Maintenance Checks and Readiness Testing (hr/calendar year)	Non-Emergency Operation (hr/mon)	Non-Emergency Operation (hr/calendar year)
				Column A		Column B
January						
February						
Etc.						
December						

	Add Columns A + B	Add Column B
Limit	100 hours	50 hours
January		
February		
Etc.		
December		

TAPCR 1200-03-10-.04(2)(b)

E77-17(SM2). For fee purposes, the permittee shall calculate emissions of particulate matter (PM), sulfur dioxide (SO_2), and nitrogen oxide (NO_x). The permittee shall utilize the emission factors listed in the table below. The permittee shall utilize the hours of operation from **Condition E77-16(SM2)**. The permittee shall maintain the following log format or an alternative format which readily provides the same required information.

Emission from July 1 to June 30 (Fee Accounting Period)

Pollutant	Emission Factors	Emission Factors Source	Hours of Operation (hr/yr)	Emissions (ton/yr)
PM	0.20 grams PM/kw-hr	NSPS standard		
SO_2	0.00205 lb SO2/MMBtu	AP-42, Section 3.3		
NMHC + NO_X	4.0 grams NOx/kw-hr	NSPS standard		

TAPCR 1200-03-26-.02(9)(g)2.(ii)

E77-18(SM2). If this source operates for the purposes specified in paragraph (3) of **Condition E77-15(SM2)**, the permittee must submit an annual report according to the following requirements in (a) through (c) of this condition.

(a) The report must contain the following information:
- (i) Company name and address where the engine is located.
- (ii) Date of the report and beginning and ending dates of the reporting period.
- (iii) Engine site rating and model year.
- (iv) Latitude and longitude of the engine in decimal degrees reported to the fifth decimal place.
- (v) Hours spent for operation for the purposes specified in paragraph (3) of **Condition E77-15(SM2)**, including the date, start time, and end time for engine operation for the purposes specified in paragraph (3) of **Condition E77-15(SM2)**. The report must also identify the entity that dispatched the engine and the situation that necessitated the dispatch of the engine.

(b) The first annual report must cover the calendar year 2016 and must be submitted no later than March 31, 2017. Subsequent annual reports for each calendar year must be submitted no later than March 31 of the following calendar year.

(c) The annual report must be submitted electronically using the subpart specific reporting form in the Compliance and Emissions Data Reporting Interface (CEDRI) that is accessed through EPA's Central Data Exchange (CDX) (*www.epa.gov/cdx*). However, if the reporting form specific to this subpart is not available in CEDRI at the time that the report is due, the written report must be submitted to the Technical Secretary at one of the addresses listed below:

By mail:
Division of Air Pollution Control
William R. Snodgrass Tennessee Tower
312 Rosa L. Parks Avenue, 15th Floor
Nashville, TN 37243

Or

By email:
Air.Pollution.Control@tn.gov

40 CFR §60.4214(d)

END OF PERMIT NUMBER 568333

ATTACHMENT 1

Permit Shield

ATTACHMENT 1: Permit Shield

The following requirements have been specifically identified as not applicable, based on the information contained in the Title V application.

Citation	Comments
40 CFR 60 Subpart Db 1200-03-16-.59	These provisions are not applicable to the Coal and Natural Gas-fired Boilers at the NNA-S facility since the boilers were constructed prior to June 19, 1984. The coal fired boilers have been permanently shut down and closed in place in July of 2013, when three new gas-fired Boilers were installed.
40 CFR 60 Subpart Dc	This subpart is not applicable to the Waste Heat Boiler at NNA-S facility since the boiler was constructed prior to June 9, 1989. This subpart is applicable to the Three 58.853 MMBTU/hr Natural Gas-Fired Boiler that stated operations on 3/22/2013.
40 CFR 60 Subpart E TAPCR 1200-03-16-.04	These provisions are not applicable to the Waste Incinerator at the NNA-S facility since the charge rate is limited to 30 tons/day. The waste incinerator has been removed from operation and the permit surrendered.
40 CFR 60 Subpart K TAPCR 1200-03-.16-.10	These provisions are not applicable to any storage tanks at the NNA-S facility since no tanks were constructed between June 11, 1973 and May 19, 1978.
40 CFR 60 Subpart Ka TAPCR 1200-03-16-.11	These provisions are not applicable to any tanks at the NNA-S facility, since the storage tanks are less than 40,000 gallons.
40 CFR 60 Subpart Kb TAPCR 1200-03-16-.61	These provisions are not applicable to any tanks at the NNA-S facility since tanks constructed after July 23, 1984, have capacities <10,568 gallons.
40 CFR 60 Subpart Y 1200-03-16-.22	This subpart is not applicable to the NNA-S facility since NNA-S purchased coal as a fuel for the Coal fired Boilers.
40 CFR 60 Subpart KK TAPCR 1200-03-16-.46	These provisions are not applicable to the NNA-S facility since NNA-S does not manufacture lead acid batteries used in the vehicles manufactured at the facility.
40 CFR 60 Subpart MM TAPCR 1200-03-16-.34	Fascia Paint Line 1 and Fascia Paint Line 2 Plastic Plant Topcoats are exempt from these provisions [40 CFR 60.390(b); 1200-03-16-.34(1)(b)].
40 CFR 60 Subpart SS TAPCR 1200-03-16-.36	These provisions are not applicable to the NNA-S facility since NNA-S does not manufacture large appliances.
40 CFR 60 Subpart TT TAPCR 1200-03-16-.38	These provisions are not applicable to the NNA-S facility since NNA-S does not have metal coil surface coating operations.
40 CFR 60 Subpart XX TAPCR 1200-03-16-.44	These provisions are not applicable to the NNA-S facility since NNA-S does not meet the definition of a bulk gasoline terminal.
40 CFR 60 Subpart BBB TAPCR 1200-03-16-.60	These provisions are not applicable to the NNA-S facility since NNA-S does not manufacture tires used on the vehicles manufactured at the facility.
40 CFR 60 Subpart DDD	This subpart is not applicable to the NNA-S facility since NNA-S does not manufacture polymer materials used on the vehicles manufactured at the facility.
40 CFR 60 Subpart TTT TAPCR 1200-03-16-.57	These provisions are not applicable to the NNA-S facility since the facility does not manufacture plastic business machines.
40 CFR 60 Subpart VVV	This subpart is not applicable to the NNA-S facility since NNA-S does not have operations for the polymeric coating of support substrates.
40 CFR 61 Subpart J TAPCR 1200-03-11-.07	These provisions are not applicable to the NNA-S facility since NNA-S does not purchase, use, or store a material that contains >10% benzene by weight.
40 CFR 61 Subpart M TAPCR 1200-03-11-.02	These provisions are not applicable to the NNA-S facility since NNA-S does not use asbestos containing materials. NNS-S is only subject to the notification requirements of 40 CFR §61.145 Standard For Demolition And Renovation.
40 CFR 61 Subpart N TAPCR 1200-03-11-.09	These provisions are not applicable to the NNA-S facility since NNA-S purchases glass products used in the vehicles manufactured at the facility.
40 CFR 61 Subpart V TAPCR 1200-03-11-.06	These provisions are not applicable to the NNA-S facility since NNA-S does not purchase, use, or store a material containing >10% benzene or vinyl chloride by weight.
40 CFR 61 Subpart Y	This subpart is not applicable to the NNA-S facility since NNA-S does not store Benzene.
40 CFR 63 Subpart Q	This subpart is not applicable to the Cooling Towers at the NNA-S facility since treatment chemicals containing chromium are not used.
40 CFR 63 Subpart R	This subpart is not applicable to the NNA-S facility since the facility does not meet the definition of a bulk gasoline terminal.
40 CFR 63 Subpart T	This subpart is not applicable to any parts washers at the NNA-S facility since the solvents used do not contain the specified HAPs in a concentration >5%.

ATTACHMENT 1: Permit Shield (continued)

Citation	Comments
40 CFR 63 Subpart DD	This subpart is not applicable to the Wastewater Treatment units which receive wastewater from NNA's Decherd facility since wastewater treatment is not the predominant activity at the Smyrna facility.
40 CFR 63 Subpart OO	This subpart is not applicable to any operations at the NNA-S facility as there are not referenced in any NNA-S applicable subparts.
40 CFR 63 Subpart PP	This subpart is not applicable to any operations at the NNA-S facility as there are not referenced in any NNA-S applicable subparts.
40 CFR 63 Subpart QQ	This subpart is not applicable to any operations at the NNA-S facility as there are not referenced in any NNA-S applicable subparts.
40 CFR 63 Subpart RR	This subpart is not applicable to any operations at the NNA-S facility as there are not referenced in any NNA-S applicable subparts.
40 CFR 63 Subpart SS	This subpart is not applicable to any operations at the NNA-S facility as there are not referenced in any NNA-S applicable subparts.
40 CFR 63 Subpart TT	This subpart is not applicable to any operations at the NNA-S facility as there are not referenced in any NNA-S applicable subparts.
40 CFR 63 Subpart UU	This subpart is not applicable to any operations at the NNA-S facility as there are not referenced in any NNA-S applicable subparts.
40 CFR 63 Subpart VV	This subpart is not applicable to any operations at the NNA-S facility as there are not referenced in any NNA-S applicable subparts.
40 CFR 63 Subpart WW	This subpart is not applicable to any operations at the NNA-S facility as there are not referenced in any NNA-S applicable subparts.
40 CFR 63 Subpart JJJ	This subpart is not applicable to the NNA-S facility since the NNA-S does not manufacture polymers and resins used on the vehicles manufactured at the facility.
40 CFR 63 Subpart PPPPP	The Engine Test Cells/Standards were constructed prior to May 14, 2002 and therefore these requirements are not applicable to the NNAS facility. The engine test cell were removed the Title V permit in Minor Modification #1 issued on June 21, 2011.
40 CFR 68 TAPCR 1200-03-32	This subpart is not applicable to the NNA-S facility since the quantities of toxic and flammable substances on site do not exceed the threshold quantities.
40 CFR 82 Subpart A	This subpart is not applicable to the NNA-S facility since NNA-S does not produce, consume, transform, destroy, import, or export controlled substances.
40 CFR 82 Subpart B	This subpart is not applicable to the Trim and Chassis S1 and S2 Vehicle Assembly Lines at the NNA-S facility.
40 CFR 82 Subpart E	This subpart is not applicable to the NNA-S facility since NNA-S does not manufacture products that contain class I substances or manufacture products with a process that uses class I substances.
40 CFR 82 Subpart F	This subpart is not applicable to the Trim and Chassis Vehicle Assembly Line personnel at the NNA-S facility.
40 CFR 85	This subpart is not applicable to the NNA-S facility since the requirements apply to the design of engines/vehicles, and design operations are not conducted at the NNA-S facility.
40 CFR 86	This subpart is not applicable to the NNA-S facility since the requirements apply to the design of engines/vehicle, and the design operations are not conducted at the NNA-S facility.
TAPCR 1200-03-14-.01(6)	This section is not applicable to any operations at the NNA-S facility since NNA-S does not have a process emission source with actual emissions >1,000 tons/yr of sulfur dioxide.
TAPCR 1200-03-18-.13	This section is not applicable to any operations at the NNA-S does not have metal coil surface coating operations.
TAPCR 1200-03-18-.18	This section is not applicable to any operations at the NNA-S facility since NNA-S does not manufacture large appliances.
TAPCR 1200-03-18-.20	This section is not applicable to the following coating operations at the NNA-S facility: System 1 Frame E-Coat; System 1 Sealers; System 1 Stoneguard; System 1 PVC Undercoat; System 1 Cavity Wax; System 1 Wheelhouse Blackout; System 1 Laboratory 1 Test Booth; System 2 Sealers; System 2 Stoneguard; System 2 Cavity Wax; System 2 Wheelhouse Blackout; System 2 Undercoat; and the Trim and Chassis S1 and S2 Vehicle Assembly Lines. These surface coating operations are not metal parts coating lines as defined in the rule.
TAPCR 1200-03-18-.23	This section is not applicable to any operations at the NNA-S facility since the facility does not meet the definition of a bulk gasoline terminal.

ATTACHMENT 1: Permit Shield (continued)

Citation	Comments
TAPCR 1200-03-18-.28	This section is not applicable to any tanks at the NNA-S facility since NNA-S does not have external floating roof tanks with a capacity >40,000 gallons.
TAPCR 1200-03-18-.29	This section is not applicable to any tanks at the NNA-S facility since all are less than 40,000 gallons.
TAPCR 1200-03-18-34	This section in not applicable to any operations at the NNA-S facility since NNA-S does not manufacture tires used on the vehicles manufactured at the facility.
TAPCR 1200-03-18-.39	This section is not applicable to any operations at the NNA-S facility since NNA-S manufacture polymers used on the vehicles manufactured at the facility.
TAPCR 1200-03-18-.45	This section is not applicable to any operations at the NNA-S facility since original equipment manufacturer coatings applied at an assembly plant are exempt [1200-03-18-.45(3)(c)].
TAPCR 1200-03-18-.48	This section is not applicable to the storage tanks at the NNA-S facility less than 100 tons of emissions.
TAPCR 1200-03-18-.79	This sections is not applicable to any operation at the NNA-S facility since NNA-S does not have other sources with potential VOC emissions >100 tons/yr.

ATTACHMENT 2

OPACITY MATRIX DECISION TREE for
VISIBLE EMISSION EVALUATION METHOD 9
dated JUNE 18, 1996 and amended September 11, 2013

Decision Tree PM for Opacity for Sources Utilizing EPA Method 9*

Notes:

PM = Periodic Monitoring required by 1200-03-09-.02(11)(e)(iii).

This Decision Tree outlines the criteria by which major sources can meet the periodic monitoring and testing requirements of Title V for demonstrating compliance with the visible emission standards set forth in the permit. It is not intended to determine compliance requirements for EPA's Compliance Assurance Monitoring (CAM) Rule (formerly referred to as Enhanced Monitoring – Proposed 40 CFR 64).

Examine each emission unit using this Decision Tree to determine the PM required.*

Use of continuous emission monitoring systems eliminates the need to do any additional periodic monitoring.

Visible Emission Evaluations (VEEs) are to be conducted utilizing EPA Method 9. The observer must be properly certified to conduct valid evaluations.

Typical Pollutants
Particulates, VOC, CO, SO_2, NO_x, HCl, HF, HBr, Ammonia, and Methane.

Initial observations are to be repeated within 90 days of startup of a modified source, if a new construction permit is issued for modification of the source.

A VEE conducted by TAPCD personnel after the Title V permit is issued will also constitute an initial reading.

Reader Error
EPA Method 9, Non-NSPS or NESHAPS stipulated opacity standards:
The TAPCD guidance is to declares non-compliance when the highest six-minute average** exceeds the standard plus 6.8% opacity (e.g. 26.8% for a 20% standard).

EPA Method 9, NSPS or NESHAPS stipulate opacity standards:
EPA guidance is to allow only engineering round. No allowance for reader error is given.

*Not applicable to Asbestos manufacturing subject to 40 CFR 61.142

**Or second highest six-minute average, if the source has an exemption period stipulated in either the regulations or in the permit.

Dated June 18, 1996
Amended September 11, 2013

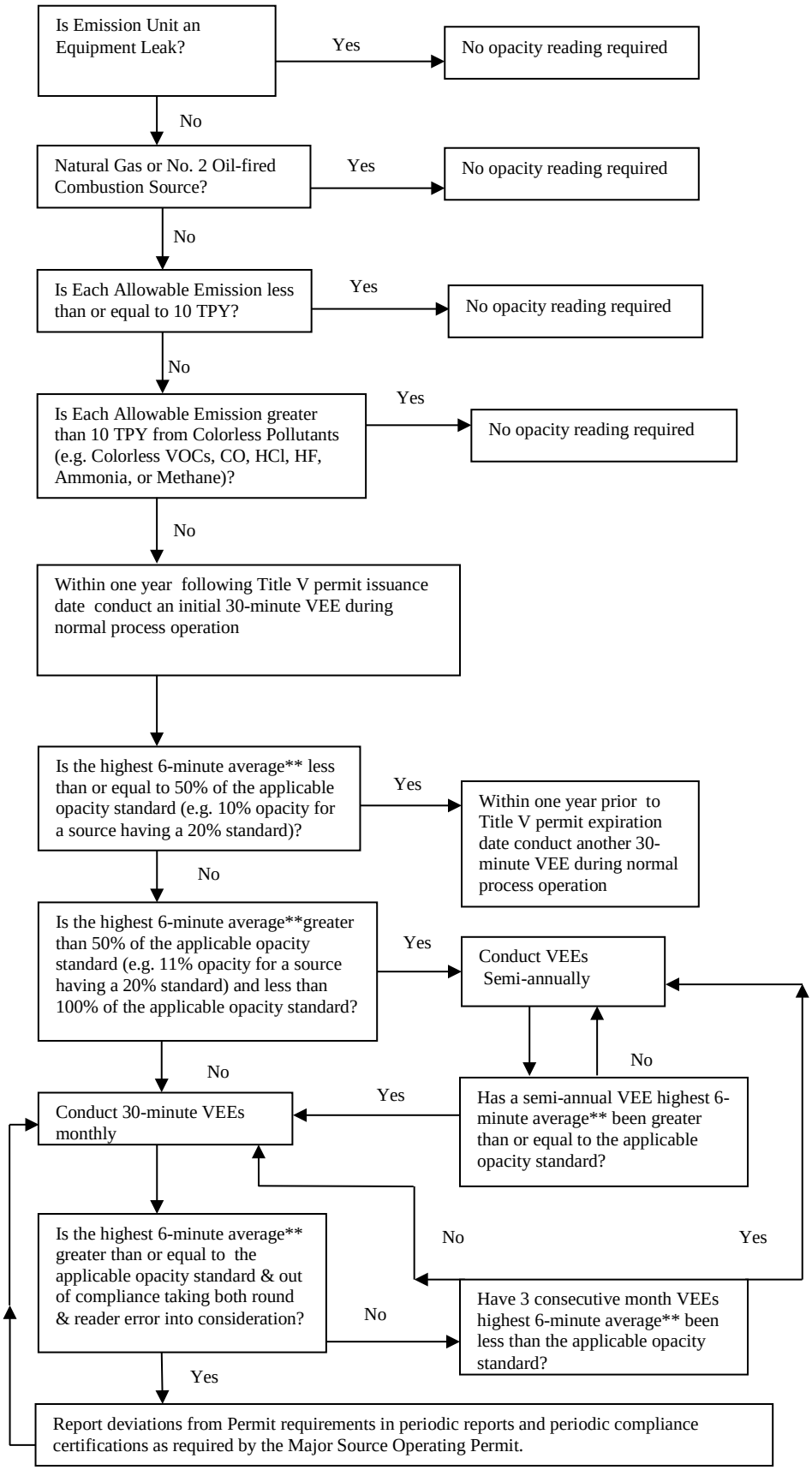

ATTACHMENT 3

Emission Log Information

Description of Required Emissions Logs

Title V Condition Number	Emission Source Description	Name of Emission Log
E3-1	Permitted Sources for ESR# 75-0155	Facility Wide Speciated HAP Emission Report
E4-2	Permitted Sources for ESR# 75-0155 – Facility-Wide Combined Coating Sources	Facility Wide HAPs Emission Monthly Summary Report
E4-2	Permitted Sources for ESR# 75-0155 – Facility Wide Combined Coating Sources	Facility Wide Monthly HAPs Emission Report
E4-3	Permitted Sources for ESR# 75-0155 – Facility-Wide Combined Miscellaneous Sealers and Adhesives Source (Not Glass Bonding)	Facility Wide HAPs Sealers and Adhesives Monthly Emissions Summary Report
E4-4	Permitted Sources for ESR# 75-0155 – Facility-Wide Combined Deadener Material Source **Note:** currently using 100% compliant material, report not submitted	Facility Wide HAPs Deadener Material Monthly Emissions Summary Report
E11-1	Paint Line 1 Body and Frame Pretreatment Lines (ESR# 75-015-90)	Air Compliance Rollup Report – Department Summary – Paint Line 1 (report shows monthly and 12 month consecutive emissions)
E11-1	Paint Line 1 Body and Frame Pretreatment Lines (ESR# 75-015-90)	Paint Line 1 Monthly Body and Frame Pretreat VOC
E12-2	Paint Line 1 Frame E-coat Line (ESR# 75-015-07) **Note:** Currently not in operations, reports not submitted	Frame E-Coat Line Summary Report - (report shows monthly and 12 month consecutive emissions)
E12-5	Paint Line 1 Frame E-coat Line (ESR# 75-015-07) **Note:** Currently not in operations, reports not submitted	Frame E-Coat Line Monthly Report
E21-1, E22-1, E23-1, E24-2, E25-2, E26-3, and E27-3	Paint Line 2 Pretreatment Line (75-0155-89), Paint Line 2 Body E-Coat Line (75-0155-71), Paint Line 2 Stoneguard and Cavity Wax Coating Line (75-0155-68), Paint Line 2 Primer Coating Line (75-0155-66), Paint Line 2 Topcoat Lines and Touch Up Operations (75-0155-64), Paint Line 2 Cavity Wax Booth (75-0155-70), Paint Line 2 Undercoating Booth (75-0155-25)	Department Summary – Paint Line 2 (report shows monthly and 12 month consecutive emissions)
E21-1, E22-1, E23-1, E23-2, E24-2, E25-2, E26-2, E26-3, E27-2, and E27-3	Paint Line 2 Pretreatment Line (75-0155-89), Paint Line 2 Body E-Coat Line (75-0155-71), Paint Line 2 Stoneguard and Cavity Wax Coating Line (75-0155-68), Paint Line 2 Primer Coating Line (75-0155-66), Paint Line 2 Topcoat Lines and Touch Up Operations (75-0155-64), Paint Line 2 Cavity Wax Booth (75-0155-70), Paint Line 2 Undercoating Booth (75-0155-25)	Paint Line 2 Monthly VOC Compliance Report
E22-2, E24-3, E24-5, and E25-3	Paint Line 2 Body E-Coat Line(75-0155-71), Paint Line 2 Primer Coating Line (75-0155-66), Paint Line 2 Topcoat Lines and Touch Up Operations (75-0155-64)	Paint Line 2 Daily Compliance Report Summary
E22-2, E24-3, E24-5, and E25-3	Paint Line 2 Body E-Coat Line(75-0155-71), Paint Line 2 Primer Coating Line (75-0155-66), Paint Line 2 Topcoat Lines and Touch Up Operations (75-0155-64)	Paint Line 2 Daily NSPS Report
E23-2, E24-4, E26-2, and E27-2	Paint Line 2 Stoneguard and Cavity Wax Coating Line (75-0155-68), Paint Line 2 Primer Coating Line (75-0155-66), Paint Line 2 Cavity Wax Booth (75-0155-70), Paint Line 2 Undercoating Booth (75-0155-25)	Paint Line 2 Monthly Content Limit Summary
E31-2	Fascia Paint Line 1 (75-0155-53)	Air Compliance Rollup Report – Department Summary – Fascia Paint Line 1 (report shows monthly and 12 month consecutive emissions)
E31-2	Fascia Paint Line 1 (75-0155-53)	Fascia Paint Line 1 VOC Compliance
E31-3	Fascia Paint Line 1 (75-0155-53)	Fascia Paint Line 1 Daily Compliance Report Summary

Title V Condition Number	Emission Source Description	Name of Emission Log
E31-3	Fascia Paint Line 1 (75-0155-53)	Fascia Paint Line 1 VOC Content Report
E32-2	Fascia Paint Line 2 (75-0155-62)	Air Compliance Rollup Report – Department Summary – Fascia Paint Line 2 (report shows monthly and 12 month consecutive emissions)
E32-2	Fascia Paint Line 2 (75-0155-62)	Fascia Paint Line 2 Monthly VOC Compliance
E32-3, E32-4, and E32-5	Fascia Paint Line 2 (75-0155-62)	Fascia Paint Line 2 Daily Air Compliance Report Summary
E32-3, E32-4, and E32-5	Fascia Paint Line 2 (75-0155-62)	Fascia Paint Line 2 NSPS Report
E35-2	Paint Line 1 (75-0155-51)	Air Compliance Rollup Report – Department Summary – Paint Line 1 (report shows monthly and 12 month consecutive emissions)
E35-2	Paint Line 1 (75-0155-51)	Paint Line 1 Source 51 Monthly VOC Report
E35-3, E35-5, E35-6, E35-10, and E35-11	Paint Line 1 (75-0155-51)	Paint Line 1 Monthly NSPS Report
E41-1	Service Parts E-Coat Line (75-0155-72)	Air Compliance Rollup Report – Department Summary – Service Parts Source 72 (report shows monthly and 12 month consecutive emissions)
E41-1	Service Parts E-Coat Line (75-0155-72)	Service Parts Source 72 Monthly VOC Report
E41-2	Service Parts E-Coat Line (75-0155-72)	Service Parts Source 72 Monthly NSPS Report
E43-1	Battery Assembly Electrolyte Filling and Degassing (75-0155-33)	Battery Assembly Source 33 VOC Emissions Rollup (report shows monthly and 12 month consecutive emissions)
E43-1	Battery Assembly Electrolyte Filling and Degassing (75-0155-33)	Battery Assembly Source 33, Electrolyte Filling and Degassing Monthly VOC Report
E45-1	Battery Assembly Sealers and Adhesives (75-0155-39)	Air Compliance Rollup Report – Department Summary – Battery Sealers and Adhesives Source 39 (report shows monthly and 12 month consecutive emissions)
E45-1	Battery Assembly Sealers and Adhesives (75-0155-39)	Battery Sealers and Adhesives Monthly VOC Report
E46-3	Natural Gas Fuel Burning Sources (75-0155-56)	Natural Gas Fuel Burning for Battery Plant – Source 56, Title V Conditions E46 (report shows monthly and 12 month consecutive natural gas usage and emissions)

E51-1	Miscellaneous Solvent Usage (75-0155-22)	Air Compliance Rollup Report – Miscellaneous Solvents Source 22 (report shows monthly and 12 month consecutive emissions)
E51-1	Miscellaneous Solvent Usage (75-0155-22)	Miscellaneous Solvents Monthly VOC Report
E52-1	Miscellaneous Sealers and Adhesives (75-0155-78)	Air Compliance Rollup Report – Miscellaneous Sealers and Adhesives Source 78 (report shows monthly and 12 month consecutive emissions)
E52-1	Miscellaneous Sealers and Adhesives (75-0155-78)	Miscellaneous Sealers and Adhesives Monthly VOC Report
E61-3 and E61-9	Three Natural Gas-fired Boilers (75-0155-01)	Three Natural Gas-Fired Boilers - Source 01, Title V Conditions E61 (report shows monthly and 12 month consecutive emissions)
E62-1, E62-5, and E62-6	Natural Gas Fuel Burning (75-0155-65)	Natural Gas Fuel Burning Facility Wide – Source 65, Title V Conditions E62 (report shows monthly and 12 month consecutive emissions)
E64-2	Paint Strip House (75-0155-61)	Rollup Report for General Category Sources – Department Summary Paint Strip House Source 61 (report shows monthly and 12 month consecutive emissions)
E64-2	Paint Strip House (75-0155-61)	Paint Strip House Monthly VOC Report
E66-1	WWL Preparation Platforms (4) and Spray Booths with Ovens (2) (75-0155-26)	WWL Preparation Platforms (4) and Spray Booths with Ovens (2) Annual Summary (report shows monthly and 12 month consecutive emissions and VOC Content)
E66-1	WWL Preparation Platforms (4) and Spray Booths with Ovens (2) (75-0155-26)	WWL Preparation Platforms (4) and Spray Booths with Ovens (2) Monthly VOC Report
E71-3	Natural Gas Fuel Burning Sources (75-0155-52)	Natural Gas Fuel Burning Paint Line 1 and FPL1 - Source 52, Title V Conditions E71 (report shows monthly and 12 month consecutive emissions)

Required Components of Each Report

<u>Facility Wide Speciated HAP Emission Report</u>

1. Reporting year
2. Emission Source Description and Emission Source Reference Numbers
3. HAP Chemical Names and CAS Numbers
4. Speciated HAP Emissions per calendar year by Source
5. Grand Total Speciated HAP Emissions per calendar year

Facility Wide HAPs Emission Monthly Summary Report

1. Reporting Month
2. HAPs Emitted
3. Solids Applied
4. HAPs Emitted/Solids Applied
5. HAPs Emitted/Solids Applied Limit

Facility Wide Monthly HAPs Emission Report Reporting Month

1. Emission Source
2. HAPs Emitted
3. Solids Applied
4. HAPs Emitted/Solids Applied
5. HAPs Emitted/Solids Applied Limit

Facility Wide HAPs Sealers and Adhesives Monthly Emissions Summary Report

1. Reporting Month
2. Pounds of Material Used
3. HAPs Emitted
4. HAPs Emitted/Pound of Material Used
5. HAPs Emitted/Pound of Material Used Limit

Facility Wide HAPs Deadener Material Monthly Emissions Summary Report

1. Reporting Month
2. Pounds of Material Used
3. HAPs Emitted
4. HAPs Emitted/Pound of Material Used
5. HAPs Emitted/Pound of Material Used Limit

Air Compliance Rollup Report – Department Summary – Paint Line 1

1. Last Month of 12 Consecutive Month Period
2. Emission Source Reference Number and Source Description
3. Monthly Emissions
4. 12 Consecutive Month Emissions

Paint Line 1 Monthly Body and Frame Pretreat VOC

1. Month of Report
2. Product Name/Internal ID/Description
3. Monthly Usage (lbs)
4. VOC Density (lbs/gal)
5. Total VOC Used (lbs)
6. Total VOC Emitted (lbs)

Frame E-Coat Line Summary Report

1. Last Month of 12 Consecutive Month Period
2. Emission Source Reference Number and Source Description
3. Monthly Emissions
4. 12 Consecutive Month Emissions

Frame E-Coat Line Monthly Report

1. Category, i.e. Emission Source
2. Product Name
3. Monthly Usage (gallons)
4. Material Density (lbs/gal)

5. VOC Density (lbs/gal)
6. Total VOC Used (lbs)
7. VOC Capture Efficiency (%)
8. VOC Control Efficiency (%)
9. Total VOC Emitted (lbs)

Department Summary – Paint Line 2

1. Last Month of 12 Consecutive Month Period
2. Emission Source Reference Number and Source Description
3. Monthly Emissions
4. 12 Consecutive Month Emissions

Paint Line 2 Monthly VOC Compliance Report

1. Category, i.e. Emission Source
2. Product Name
3. Monthly Usage (gallons)
4. Material Density (lbs/gal)
5. VOC Density (lbs/gal)
6. Total VOC Used (lbs)
7. VOC Capture Efficiency (%)
8. VOC Control Efficiency (%)
9. Total VOC Emitted (lbs)

Paint Line 2 Daily Compliance Report Summary

1. Category, i.e. Emission Source
2. Daily pounds of VOC per gallon of solids applied (lb/gsa)

Paint Line 2 Daily NSPS Report

1. Source ID
2. Product ID
3. Net Coating Used (gal)
4. VOC Content (lbs/gal)
5. Spray Volume Solids (%)
6. VOC's Used (lbs)
7. Transfer Efficiency (%)
8. Coating Solids Applied (gal)
9. VOC Control Efficiency (%)
10. VOC Emitted (lbs)
11. VOC Emitted/Solids Applied (lbs/gsa)

Paint Line 2 Monthly Content Limit Summary

1. Category, i.e. Emission Source
2. Source ID
3. Product ID
4. Net Coating Used (gal)
5. VOC Content (lbs/gal)
6. VOC's Used (lbs)
7. VOC Control Efficiency (%)
8. VOC Emitted (lbs)
9. Transfer Efficiency (%)
10. Coating Solids Applied (gal)
11. VOC Emitted/Solids Applied (lbs/gsa)

Air Compliance Rollup Report – Department Summary – Fascia Paint Line 1

1. Last Month of 12 Consecutive Month Period

2. Emission Source Reference Number and Source Description
3. Monthly Emissions
4. 12 Consecutive Month Emissions

Fascia Paint Line 1 VOC Compliance

1. Category, i.e. Emission Source
2. Product Identification
3. Monthly Usage (gallons)
4. Material Density (lbs/gal)
5. VOC Density (lbs/gal)
6. Total VOC Used (lbs)
7. VOC Capture Efficiency (%)
8. VOC Control Efficiency (%)
9. Total VOC Emitted (lbs)

Fascia Paint Line 1 Daily Air Compliance Report Summary

1. Category, i.e. Emission Source
2. Daily pounds of VOC emitted
3. VOC Daily Weighted Average (lb/gal)

Fascia Paint Line 1 VOC Content Report

1. Category, i.e. Emission Source
2. Source ID
3. Product ID
4. Net Coating Used (gal)
5. VOC's Used (lbs)
6. VOC Capture Efficiency (%)
7. VOC Control Efficiency (%)
8. VOC Emitted (lbs)
9. VOC Content (lbs/gal)
10. VOC Content Daily Weighted Average Limit (lbs/gal)

Air Compliance Rollup Report – Department Summary – Fascia Paint Line 2

1. Last Month of 12 Consecutive Month Period
2. Emission Source Reference Number and Source Description
3. Monthly Emissions
4. 12 Consecutive Month Emissions

Fascia Paint Line 2 Monthly VOC Compliance

1. Category, i.e. Emission Source
2. Product Identification
3. Monthly Usage (gallons)
4. Material Density (lbs/gal)
5. VOC Density (lbs/gal)
6. Total VOC Used (lbs)
7. VOC Capture Efficiency (%)
8. VOC Control Efficiency (%)
9. Total VOC Emitted (lbs)

Fascia Paint Line 2 Daily Air Compliance Report Summary

1. Category, i.e. Emission Source
2. Daily pounds of VOC emitted
3. VOC Daily Weighted Average (lb/gal)
4. VOC Daily Weighted Average lbs used per gallon Solids used (lb/gal)

Fascia Paint Line 2 NSPS Report

1. Category, i.e. Emission Source
2. Source ID
3. Product ID
4. Net Coating Used (gal)
5. VOC Content (lbs/gal)
6. VOC's Used (lbs)
7. Solids Content (Volume %)
8. Solids Usage (gal)
9. Transfer Efficiency (%)
10. Total Solids Applied
11. VOC Capture Efficiency (%)
12. VOC Control Efficiency (%)
13. VOC Emitted (lbs)
14. VOC Content Daily Weighted Average (lbs/gal Solids Used)
15. VOC Content Daily Weighted Average Limit (lbs/gal Solids Used)

Air Compliance Rollup Report – Department Summary – Paint Line 1

1. Last Month of 12 Consecutive Month Period
2. Source Description
3. Product Category
4. Monthly Emissions
5. 12 Consecutive Month Emissions
6. Emission Source Total Monthly Emissions
7. Emission Source Total 12 Consecutive Month Emissions

Paint Line 1 Source 51 Monthly VOC Report

1. Source and Permit Condition Identification
2. Month of Report
3. Product Identification
4. Monthly Usage (gallons)
5. Material Density (lbs/gal)
6. VOC Density (lbs/gal)
7. Total VOC Used (lbs)
8. VOC Capture Efficiency (%)
9. VOC Control Efficiency (%)
10. Total VOC Emitted (lbs)
11. Total Recorded Waste Credit (VOC)
12. Source Monthly Emission Total

Paint Line 1 Monthly NSPS Report

1. Report Date
2. Category, i.e. Emission Source
3. Source ID
4. Product ID
5. Net Coating Used (gal)
6. VOC Content (lbs/gal)
7. Solids Content (Volume %)
8. VOC's Used (lbs)
9. Solids Usage (gal)
10. VOC Used per Solids Consumed (lb/gal)
11. Transfer Efficiency (%)

12. Volume Solids Applied (Gal)
13. VOC Control Efficiency (%)
14. VOC Emitted (lbs)
15. VOC Emission Rate (lbs/gal Solids Deposited)
16. Permit Limit (lbs/gal Solids Deposited)

Air Compliance Rollup Report – Department Summary – Service Parts Source 72

1. Last Month of 12 Consecutive Month Period
2. Emission Source Reference Number and Source Description
3. Product Category
4. Monthly Emissions
5. 12 Consecutive Month Emissions

Service Parts Source 72 Monthly VOC Report

1. Category, i.e. Emission Source
2. Report Date(s)
3. Product Identification
4. Monthly Usage (gallons)
5. Material Density (lbs/gal)
6. VOC Density (lbs/gal)
7. Total VOC Used (lbs)
8. VOC Capture Efficiency (%)
9. VOC Control Efficiency (%)
10. Total VOC Emitted (lbs)

Service Parts Source 72 Monthly NSPS Report

1. Category, i.e. Emission Source
2. Report Date(s)
3. Source ID
4. Product ID
5. Net Coating Used (gal)
6. VOC Content (lbs/gal)
7. VOC's Used (lbs)
8. Spray Volume Solids (%)
9. Transfer Efficiency (%)
10. Coating Solids Applied (gal)
11. VOC Capture Efficiency (%)
12. VOC Control Efficiency (%)
13. VOC Emitted (lbs)
14. VOC Emitted/Solids Applied (lbs/gsa)
15. NSPS Limit VOC Emitted/Solids Applied (lbs/gsa)

Battery Assembly Source 33 VOC Emissions Rollup

1. Last Month of 12 Consecutive Month Period
2. Emission Source Reference Number and Source Description
3. Monthly Emissions
4. 12 Consecutive Month Emissions

Battery Assembly Source 33, Electrolyte Filling and Degassing Monthly VOC Report

1. Category, i.e. Emission Source
2. Report Date(s)
3. Operating Scenario
4. Monthly Usage (lbs)

5. Emission Factor
6. Emission Factor Unit
7. VOC Destruction Efficiency (%)
8. Total VOC Emitted (lbs)

Air Compliance Rollup Report – Department Summary – Battery Assembly Sealers and Adhesives Source 39

1. Last Month of 12 Consecutive Month Period
2. Emission Source Reference Number and Source Description
3. Product Category
4. Monthly Emissions
5. 12 Consecutive Month Emissions

Battery Sealers and Adhesives Source 39 Month VOC Report

1. Source Number and Condition
2. Report Date(s)
3. Product Identification
4. Monthly Usage (gallons)
5. Monthly Usage (lbs)
6. VOC Content (Weight %)
7. Total VOC Used (lbs)
8. VOC Capture Efficiency (%)
9. VOC Control Efficiency (%)
10. Total VOC Emitted (lbs)

Natural Gas Fuel Burning for Battery Plant – Source 56, Title V Conditions E46

1. Last Month of 12 Consecutive Month Period
2. Emission Source Reference Number and Source Description
3. Monthly Emissions
4. 12 Consecutive Month Emissions
5. Source/Process Identification
6. Fuel Type and Unit
7. Emission Factors
8. Emission Chemical Identification
9. Fuel Usage/Emissions

Air Compliance Rollup Report – Department Summary – Miscellaneous Solvents Source 22

1. Last Month of 12 Consecutive Month Period
2. Emission Source Reference Number and Source Description
3. Product Category
4. Monthly Emissions
5. 12 Consecutive Month Emissions

Miscellaneous Solvents Monthly VOC Report

1. Report Date(s)
2. Product Identification
3. Monthly Usage (gallons)
4. Product Density (lb/gal)
5. Monthly Usage (tons)
6. VOC Content (Weight %)
7. Total VOC Used (tons)
8. VOC Capture Efficiency (%)
9. VOC Control Efficiency (%)
10. Total VOC Emitted (tons)
11. Total Recordable Waste Credit (tons)
12. System Grand Total Emitted (tons)

Air Compliance Rollup Report –Miscellaneous Sealers and Adhesives Source 78

1. Last Month of 12 Consecutive Month Period
2. Emission Source Reference Number and Source Description
3. Product Category
4. Monthly Emissions
5. 12 Consecutive Month Emissions

Miscellaneous Sealers and Adhesives Monthly VOC Reports

1. Source Number and Condition
2. Report Date(s)
3. Product Identification
4. Monthly Usage (gallons)
5. Monthly Usage (lbs)
6. VOC Content (Weight %)
7. Total VOC Used (lbs)
8. VOC Capture Efficiency (%)
9. VOC Control Efficiency (%)
10. Total VOC Emitted (lbs)

Three Natural Gas-Fired Boilers – Source 01, Title V Conditions E61

1. Source/Process Identification
2. Fuel Type and Unit
3. Dates
4. Monthly Fuel Usage
5. Rolling 12 Month Fuel Usage

Natural Gas Fuel Burning Facility Wide – Source 65, Title V Conditions E62

1. Source/Process Identification
2. Fuel Type and Unit
3. Dates
4. Emission Chemical Identification
5. Fuel Usage/Emissions

Rollup Report for General Category Sources – Department Summary Paint Strip House Source 61

1. Last Month of 12 Consecutive Month Period
2. Emission Source Reference Number and Source Description
3. Product Category
4. Monthly Emissions
5. 12 Consecutive Month Emissions

Paint Strip House Monthly VOC Report

1. Source Number and Condition
2. Report Date(s)
3. Product Identification
4. Monthly Usage (gallons)
5. VOC Content (with units)
6. Total VOC Used (lbs)
7. VOC Capture Efficiency (%)
8. VOC Control Efficiency (%)
9. Total VOC Emitted (lbs)

WWL Preparation Platforms (4) and Spray Booths with Ovens (2) Annual Summary

1. Month
2. Material Category
3. Usage (gal/mo)
4. VOC Content (lb/gal)
5. VOC Content Limit (lb/gal)
6. Emissions (tons/mo)
7. Emissions (tons/12 month rolling)
8. Emissions Limit (tons/12 month rolling)

<u>WWL Preparation Platforms (4) and Spray Booths with Ovens (2) Monthly VOC Report</u>

1. Month
2. Product Identification
3. Usage (gal)
4. Product Density (lb/gal)
5. Weight Percent VOC
6. Weight Percent HAPs
7. Volume Solids Percent
8. Total Usage (lbs)
9. Monthly Emissions
10. Solids Used (gal)
11. Transfer Efficiency Percent
12. Solids Applied (gal)
13. HAP Emission Rate (lb/gsa)
14. Product VOC Density (lb/gal)
15. Exception Report
16. Cleanup Solvent Usage
17. MACT Limit
18. Monthly Summary

<u>Natural Gas Fuel Burning PL1 and FPL1 – Source 52, Title V Conditions E71</u>

1. Source/Process Identification
2. Fuel Type and Unit
3. Dates
4. Emission Chemical Identification
5. Fuel Usage/Emissions

NISSAN NORTH AMERICA, INC.
983 Nissan Drive
Smyrna, TN 37167
Tel: 615-459-1400

June 17, 2016

Submitted Electronically

Ms. Michelle Walker Owenby, Technical Secretary
Tennessee Dept. of Environment and Conservation
Division of Air Pollution Control
William R. Snodgrass Tennessee Tower
312 Rosa L. Parks Avenue, 15th Floor
Nashville, Tennessee 37243

Re: Significant Modification to Title V Permit:
Permit # 568333, ESR #75-0155
Modification of Paint Line 2, ESR #75-0155-66
Nissan North America, Inc. – Smyrna

Dear Ms. Owenby:

The Nissan North America, Inc.'s Smyrna, Tennessee Facility (Nissan) is submitting this Significant Modification application to modify Title V condition E24-2 for Paint Line 2 Prime Booth (ESR# 75-0155-66) at its existing site located at 983 Nissan Drive in Smyrna, Tennessee. Nissan is requesting this change to accommodate future changes in paint technology.

Emission Source 66, Paint Line 2 Primer Coating Line, has three independent tons per year limits for VOC in Title V Condition E24-2. There is a 223.1 tons per 12 consecutive months limit for primer, a 23.3 tons limit for chip primer and another 11.8 tons limit for blackout. For increased operational flexibility Nissan proposes a Significant Modification to combine these into a single 258.2 tons per 12 consecutive months VOC emission limit for the source.

There are not physical changes or changes to the method of operation of this source. However, paint technology improvements are expected to allow for the incorporation of chip resistant characteristics into the primer, and design changes affect the amounts of chip primer and blackout that are required. All three materials have VOC pounds per gallon solids applied limits in Title V Condition E24-3, which do not require modification. The proposed change to Title V Condition E24-2 is included in Attachment 1. Attachment 2 provides the required air pollution control application forms.

This request is merely a request to restructure the permit limits. Recordkeeping for the emission source will not change.

Nissan is only proposing to combine the tons per year limit for primer, chip primer and blackout to increase operational flexibility.

Please contact either Mike Haverstick at (615) 223-3902 or Laura McWhorter at (615) 223-3837 if you have any questions or require additional information.

Based on information and belief formed after reasonable inquiry, the statements and information in the document are true, accurate and complete.

Sincerely,

John Harris, Director
Facilities, Environmental, and Systems Engineering

cc: Bill McCabe (TDEC, Nashville EFO) - **Submitted Electronically**

Attachment 1

Proposed Title V Permit Language

75-0155-66	Paint Line 2 Primer Coating Line NSPS, LAER Waterwash and Thermal Oxidizer Control
Conditions E24-1 through E24-10 apply to source 75-0155-66.	

E24-1. Particulate matter (PM) emitted from this source (75-0155-66) shall not exceed 0.90 pounds per hour and 1.8 tons during all intervals of 12 consecutive months.

TAPCR 1200-03-07-.01(5) and 1200-03-09-.01(4) PSD evaluation 5/11/89

Compliance Method: This source shall not operate without the use of the spray booth downdraft waterwash system. A daily log shall be maintained indicating that the spray booth downdraft waterwash system was operating properly while the source was in operation.

E24-2. Volatile organic compounds (VOC) emitted from this source (75-0155-66) shall not exceed ~~the~~ 258.2 tons during all intervals of 12 consecutive months. ~~following:~~

~~223.1 tons during all intervals of 12 consecutive months for primer;~~
~~23.3 tons during all intervals of 12 consecutive months for chip primer;~~
~~11.8 tons during all intervals of 12 consecutive months for blackout.~~

TAPCR 1200-03-09-.01(5) Nonattainment NSR evaluation 5/11/89

Compliance Method: The permittee shall assure compliance with the emission limitations by calculating the total VOC emitted from this source during each calendar month and each interval of 12 consecutive calendar months and maintaining a log that contains the information specified in Attachment 3. The VOC content of all VOC-containing process materials used by this source shall be determined by using material safety data sheets (MSDS), EPA Method 24, or manufacturer/vendor formulation data which explicitly list the VOC content by weight (pounds per gallon or weight percent).

E24-3. Volatile organic compounds (VOC) emitted from this source (75-0155-66) shall not exceed the following:

9.01 pounds per gallon of solids applied for primer (daily weighted average);
12.84 pounds per gallon of solids applied for chip primer (daily weighted average);
19.01 pounds per gallon of solids applied for blackout (daily weighted average).

The permittee shall use actual transfer efficiencies. The permittee shall include the effect of oven exhaust incineration.

TAPCR 1200-03-09-.01(5) Nonattainment NSR evaluation 5/11/89

Compliance Method: The permittee shall assure compliance with the VOC coating solids applied limitation by calculating the daily volume weighted average mass of VOC emitted per volume of applied coating solids and maintaining a log that contains the information specified in Attachment 3. VOC emissions from this source shall be based on previous testing of actual measured transfer efficiency (based on approved protocol), measured oven VOC loading values (laboratory panel test), VOC contents as described in **Condition E24-2**, and incinerator VOC destruction efficiency (EPA Method 25A).

E24-4. Volatile organic compounds (VOC) emitted from the primer shall not exceed 1.40 kilograms per liter of solids applied (11.68 pounds per gallon of solids applied). The permittee shall use the transfer efficiencies stated in the EPA performance test and compliance provisions, 40 CFR 60.393, subpart MM, for primer-surfacer.

TAPCR 1200-03-16-.34(3)(b) and 40 CFR §60.392(b)

Compliance Method: The permittee shall assure compliance with the VOC coating solids applied limitation by calculating the monthly volume weighted average mass of VOC emitted per volume of applied coating solids after the control device and maintaining a log that contains the information specified in Attachment 3. The permittee shall use the procedures in TAPCR 1200-03-16-.34(4)(c)2. to calculate emissions.

E24-5. Volatile organic compounds (VOC) emitted from this source (75-0155-66) shall not exceed 1.8 kilograms per liter of solids applied (15.1 pounds per gallon of solids applied) (daily weighted average).

TAPCR 1200-03-18-.11(3)(b)1

Compliance Method: The permittee shall assure compliance with the VOC coating solids applied limitation by calculating the daily volume weighted average mass of VOC emitted per volume of applied coating solids after the control device and maintaining a log that contains the information specified in Attachment 3.

E24-6. The permittee shall comply with the applicable emission limits (from TAPCR 1200-03-18-.11) for any prime coat, final repair, or primer surfacer operation by:

(a) Installing and operating a capture system and a control device on that operation;

(b) Determining for each day the overall emission reduction efficiency needed to demonstrate compliance. The overall emission reduction needed is the lesser of the value calculated according to the procedure in TAPCR 1200-03-18 or 95 percent; and

(c) Demonstrating each day that the overall emission reduction efficiency achieved is greater than or equal to the overall emission reduction efficiency required.

TAPCR 1200-03-18-.11(5)

E24-7. The permittee shall comply with the reporting and recordkeeping requirements specified in the compliance method below.

TAPCR 1200-03-16-.34(6), 1200-03-18-.11(8)(e), and 40 CFR §60.395

Compliance Method: The permittee shall identify, record, and submit a written report every calendar quarter (postmarked not later than thirty (30) days after the end of the calendar quarter) of each instance in which the volume weighted average of the total mass of VOC's emitted to the atmosphere per volume of applied coating solids is greater than the limit specified in **Conditions E24-4** and **E24-5**. If no such instances have occurred during a particular quarter, a report stating this shall be submitted in accordance with **Condition E2**. Where compliance is achieved through the use of a capture system and control device, the volume weighted average after the control device should be reported.

The permittee shall continuously (i.e., a minimum of once every fifteen minutes) record the incinerator combustion temperature during coating operations for thermal incineration during coating operations. The permittee shall report in accordance with **Condition E2** as follows: every three-hour period shall be reported during which the average temperature measured for the thermal incinerator(s) is more than 28°C (50°F) less than the average temperature during the most recent control device performance test at which the destruction efficiency was determined. If no such periods occur, the permittee shall submit a negative report.

E24-8. The transfer efficiency for this source was determined to be 69.9% for the primer. The VOC capture efficiency has been determined to be 27.88% for the primer (per test on February 20, 2007). Performance testing showed the operating temperatures and destruction efficiencies as follows:

Description	Operating Temperature of Exhaust Oxidizer	Destruction Efficiency
Paint Line 2 Primer Coating Line – East (No. 2)	1,235°F	83.5%
Paint Line 2 Primer Coating Line – East (No. 2)	1,401°F	99.0%
Paint Line 2 Primer Coating Line – West (No. 1)	1,230°F	86.81%
Paint Line 2 Primer Coating Line – West (No. 1)	1,401°F	99.99%

Performance tests may be conducted to set different operating temperatures, destruction efficiencies, capture efficiencies, and transfer efficiencies. The Division shall be given at least thirty (30) days advance notice before conducting such a performance test. The new values shall be incorporated into this permit by administrative permit amendment.

E24-9. Visible emissions from this source (75-0155-66) shall not exceed ten (10) percent opacity (6-minute average). Visible emissions from this source shall be determined by EPA Method 9, as published in the current 40 CFR 60, Appendix A (6 minute average).

TAPCR 1200-03-05-.03(6)

Compliance Method: The permittee shall assure compliance with the opacity standard by utilizing the opacity matrix dated June 18, 1996 that is enclosed as Attachment 2.

If the magnitude and frequency of excursions reported by the permittee in the periodic monitoring for emissions is unsatisfactory to the Technical Secretary, this permit may be reopened to impose additional opacity monitoring requirements.

E24-10. This source (75-0155-66) is subject to 40 CFR Part 64-Compliance Assurance Monitoring (CAM) for particulate matter. The following table summarizes the CAM requirements:

Downdraft Waterwash System

Indicator Type	Work practices.
Measurement Approach	The permittee shall maintain a log of daily inspections to document proper operation of the waterwash system. The permittee shall conduct preventative maintenance to maintain the integrity of the waterwash system.
Indicator Range/Indicator Level	An excursion is defined as a forced shutdown of coating operations due to the buildup of overspray in the coating booth.
QIP Threshold	Not applicable.
Performance Criteria: Data Representativeness	Not applicable.
Performance Criteria: Verification of Operational Status	Not applicable.
QA/QC Practices and Criteria	Not applicable.
Monitoring Frequency: Data Collection Procedures	The permittee shall maintain a daily operating log. The permittee shall maintain a copy of the manufacturer's specifications for the operation and maintenance of the spray booth process equipment and the downdraft waterwash system. The permittee shall keep a log of routine preventative maintenance and nonroutine maintenance.
Monitoring Frequency: Averaging Period	Not applicable.

Attachment 2

Statement of Completeness and Certification of Compliance
& APC Title V Application Forms

State of Tennessee
Department of Environment and Conservation
Division of Air Pollution Control
William R. Snodgrass Tennessee Tower
312 Rosa L. Parks Avenue, 15th Floor
Nashville, TN 37243
Telephone: (615) 532-0554

TITLE V PERMIT APPLICATION
INDEX OF AIR POLLUTION PERMIT APPLICATION FORMS

Section 1: Identification and Diagrams		
This application contains the following forms:	APC Form 1, Facility Identification	1
	APC Form 2, Operations and Flow Diagrams	

Section 2: Emission Source Description Forms		
		Total number of this form
This application contains the following forms (one form for each incinerator, printing operation, fuel burning installation, etc.):	APC Form 3, Stack Identification	
	APC Form 4, Fuel Burning Non-Process Equipment	
	APC Form 5, Stationary Gas Turbines or Internal Combustion Engines	
	APC Form 6, Storage Tanks	
	APC Form 7, Incinerators	
	APC Form 8, Printing Operations	
	APC Form 9, Painting and Coating Operations	
	APC Form 10, Miscellaneous Processes	
	APC Form 33, Stage I and Stage II Vapor Recovery Equipment	
	APC Form 34, Open Burning	

Section 3: Air Pollution Control System Forms		
		Total number of this form
This application contains the following forms (one form for each control system in use at the facility):	APC Form 11, Control Equipment - Miscellaneous	
	APC Form 13, Adsorbers	
	APC Form 14, Catalytic or Thermal Oxidation Equipment	
	APC Form 15, Cyclones/Settling Chambers	
	APC Form 17, Wet Collection Systems	
	APC Form 18, Baghouse/Fabric Filters	

(OVER)

Section 4: Compliance Demonstration Forms

		Total number of this form
This application contains the following forms (one form for each incinerator, printing operation, fuel burning installation, etc.):	APC Form 19, Compliance Certification - Monitoring and Reporting - Description of Methods for Determining Compliance	
	APC Form 20, Continuous Emissions Monitoring	
	APC Form 21, Portable Monitors	
	APC Form 22, Control System Parameters or Operating Parameters of a Process	
	APC Form 23, Monitoring Maintenance Procedures	
	APC Form 24, Stack Testing	
	APC Form 25, Fuel Sampling and Analysis	
	APC Form 26, Record Keeping	
	APC Form 27, Other Methods	
	APC Form 28, Emissions from Process Emissions Sources / Fuel Burning Installations / Incinerators	
	APC Form 29, Emissions Summary for the Facility or for the Source Contained in This Application	
	APC Form 30, Current Emissions Requirements and Status	1
	APC Form 31, Compliance Plan and Compliance Certification	
	APC Form 32, Air Monitoring Network	

Section 5: Statement of Completeness and Certification of Compliance

I have reviewed this application in its entirety and to the best of my knowledge, and based on information and belief formed after reasonable inquiry, the statements and information contained in this application are true, accurate, and complete. I have provided all the information that is necessary for compliance purposes and this application consists of 5 pages and they are numbered from page Index 1 to 12-7. The status of this facility's compliance with all applicable air pollution control requirements, including the enhanced monitoring and compliance certification requirements of the Federal Clean Air Act, is reported in this application along with the methods to be used for compliance demonstration.

Name and Title of Responsible Official	Telephone Number with Area Code
John Harris, Director Facilities, Environmental and Systems Engineering	(615) 459-1400
Signature of Responsible Official	Date of Application
	6/16/16

(For definition of responsible official, see instructions for APC Form 1)

State of Tennessee
Department of Environment and Conservation
Division of Air Pollution Control
William R. Snodgrass Tennessee Tower
312 Rosa L. Parks Avenue, 15th Floor
Nashville, TN 37243
Telephone: (615) 532-0554

TITLE V PERMIT APPLICATION
FACILITY IDENTIFICATION

SITE INFORMATION				
1. Organization's legal name Nissan North America, Inc. - Smyrna			For APC Use Only	APC company point no.
2. Site name (if different from legal name)				APC Log/Permit no.
3. Site address (St./Rd./Hwy.) 983 Nissan Drive			NAICS or SIC Code NAICS Code 33611	
City or distance to nearest town Smyrna		Zip code 37167	County name Rutherford	
4. Site location (in Lat./Long)	Latitude UTM Vert. 3979390mN		Longitude UTM Horiz. 545540mE	

CONTACT INFORMATION (RESPONSIBLE OFFICIAL)			
5. Responsible official contact John Harris			Phone number with area code (615) 459-1400
6. Mailing address (St./Rd./Hwy.) 983 Nissan Drive Bin 26D			Fax number with area code
City Smyrna	State TN	Zip code 37167	Email address john.harris@nissan-usa.com

CONTACT INFORMATION (TECHNICAL)			
7. Principal technical contact Mike Haverstick			Phone number with area code (615) 223-3902
8. Mailing address (St./Rd./Hwy.) 983 Nissan Drive Bin 26D			Fax number with area code
City Smyrna	State TN	Zip code 37167	Email address mike.haverstick@nissan-usa.com

CONTACT INFORMATION (BILLING)			
11. Billing contact Mike Haverstick			Phone number with area code (615) 223-3902
12. Mailing address (St./Rd./Hwy.) 983 Nissan Drive Bin 26D			Fax number with area code
City Smyrna	State TN	Zip code 37167	Email address mike.haverstick@nissan-usa.com

TYPE OF PERMIT REQUESTED

13. Permit requested for:

Initial application to operate:		Minor permit modification:	
Permit renewal to operate:		Significant modification:	✓
Administrative permit amendment:		Construction permit:	✓

(OVER)

HAZARDOUS AIR POLLUTANTS, DESIGNATIONS, AND OTHER PERMITS ASSOCIATED WITH FACILITY

14. Is this facility subject to the provisions governing prevention of accidental releases of hazardous air contaminants contained in Chapter 1200-03-32 of the Tennessee Air Pollution Control regulations?

☐ Yes ☑ No

If the answer is Yes, are you in compliance with the provisions of Chapter 1200-03-32 of the Tennessee Air Pollution Control regulations?

☐ Yes ☐ No

15. If facility is located in an area designated as "Non-Attainment" or "Additional Control", indicate the pollutant(s) for the designation.

NA

16. List all valid Air Pollution permits issued to the sources contained in this application [identify all permits with most recent permit numbers and emission source reference numbers listed on the permit(s)].

Nissan is requesting a significant modification to combine the primer, chip primer, and blackout ton per year limits in E24-2 to a single ton/yr limit for the entire source.

17. Page number: Page Number 2-2 | Revision number: Significant Modification #3 | Date of revision: June 2016

DEPARTMENT OF ENVIRONMENT AND CONSERVATION
DIVISION OF AIR POLLUTION CONTROL
9TH FLOOR, L&C ANNEX
401 CHURCH STREET
NASHVILLE, TN 37243-1531

MAJOR SOURCE OPERATING PERMIT APPLICATION
CURRENT EMISSIONS REQUIREMENTS AND STATUS

1. FACILITY NAME:	2. EMISSION SOURCE NUMBER
Nissan North America, Inc. – Smyrna	Paint Line 2 Primer Coating Line (Source 66)

3. DESCRIBE THE PROCESS EMISSION SOURCE / FUEL BURNING INSTALLATION / INCINERATOR.
Paint Line 2 Primer Coating Line

4. IDENTIFY IF ONLY A PART OF THE SOURCE IS SUBJECT TO THIS REQUIREMENT	5. POLLUTANT	6. APPLICABLE REQUIREMENT (S) : TN AIR POLLUTION CONTROL REGULATIONS, 40 CFR, PERMIT RESTRICTIONS, AIR QUALITY BASED STANDARDS	7. LIMITATION	8. MAXIMUM ACTUAL EMISSIONS	9. COMPLIANCE STATUS (IN/OUT)
All	PM	TAPCR 1200-3-7-.01(5) and 1200-3-9-.01(4) PSD evaluation 5/11/89	0.90 lbs/hr 1.8 tons/12 months	< 0.90 lbs/hr < 1.8 tons/12 months	IN
All	VOCs	TAPCR 1200-3-9-.01(5) Nonattainment NSR evaluation 5/11/89	258.2 tons/yr	< 258.2 tons/yr	IN
All	VOCs	TAPCR 1200-3-9-.01(5) Nonattainment NSR evaluation 5/11/89 (including the effect of oven exhaust incineration)	9.01 lbs/gsa Primer 12.84 lbs/gsa Chip Primer 19.01 lbs/gsa Blackout Daily Average	< 9.01 lbs/gsa Primer < 12.84 lbs/gsa Chip Primer < 19.01 lbs/gsa Blackout	IN
Primer only	VOCs	40 CFR 60.392(b) TAPCR 1200-3-16-.34(3)(b)	11.68 lbs/gsa 1.40 kg/lsa Monthly Average	< 11.68 lbs/gsa < 1.40 kg/lsa	IN
All	VOCs	TAPCR 1200-3-18-.11(3)(b)1	15.1 lbs/gsa 1.8 kg/lsa Daily Average	< 15.1 lbs/gsa < 1.8 kg/lsa	IN
All	PM	TAPCR 1200-3-5-.03(6)	10 % opacity (6-minute average)	< 10 % opacity	IN
ALL	HAPs	40 CFR 63 Subpart IIII, Automotive and Light Duty Truck Surface Coating MACT Standard	Facility Average of 0.6 lbs HAP/gsa	Facility Average < 0.6 lbs HAP/gsa	IN

10. OTHER APPLICABLE REQUIREMENTS (NEW REQUIREMENTS THAT APPLY TO THIS SOURCE DURING THE TERM OF THIS PERMIT)

None					

9. PAGE NUMBER: 12-7 REVISION NUMBER: Significant Modification #3 DATE OF REVISION: June 2016

Note: gsa = gallon solids applied. lsa = liter solids applied.

NISSAN NORTH AMERICA, INC.
983 Nissan Drive
Smyrna, TN 37167
Tel: 615-459-1400

June 17, 2016

Title V Minor Permit Modification

Re: Permit #568333

Submitted Electronically

To: Ms. Michelle Walker Owenby, Technical Secretary
Tennessee Dept. of Environment and Conservation
Division of Air Pollution Control
William R. Snodgrass Tennessee Tower
312 Rosa L. Parks Avenue, 15th Floor
Nashville, Tennessee 37243

The Nissan North America, Inc.'s Smyrna, Tennessee Facility (Nissan) plans to make the following change(s) pursuant to TAPCR 1200-3-9-.02(11)(f)5.(ii).

Brief Description of the Change
A Developer is developing a site on Sam Griffin Road, in Smyrna, Tennessee. The Sam Griffin Road site is connected to the main Nissan Facility. The developer is constructing the ILC (Integrated Logistics Center), a 1.5 million square foot warehouse to prepare parts for delivery to the assembly line. One million square feet will be used as the ILC and 0.5 million square feet will be occupied by suppliers to support Nissan manufacturing. As part of the project a 260 Hp emergency diesel fire pump engine will be installed as part of a Clarke Fire Protection system. The purpose of this Minor Modification is to include the new fire pump engine in the Title V permit.

Emissions Resulting from the Change
The resulting increase in emissions from this change are all insignificant. The potential emissions for the Fire Pump Engine are based on 500 hours of operation per year. Emission calculations are provide in the Attachment 2.

Any new applicable requirements that will apply when the change occurs
The ILC Fire Pump Engine is a new source for the Title V permit. The new emergency fire pump engine is applicable to the NESHAP 40 CFR 63 Subpart ZZZZZ for Reciprocating Internal Combustion Engines and the NSPS 40 CFR 60 Subpart IIII for Stationary Compression Ignition Internal Combustion Engines. However, these requirements are included for other sources in the Title V permit.

This change does not exceed the allowable emission rate for VOC and PM and does not constitute a Title I modification. This change does not violate applicable requirements or contravene federally enforceable permit terms and conditions that are monitoring, recordkeeping, reporting, or compliance certification requirements.

Attachment 1 contains a proposed list of permit conditions for this project. Attachment 2 contains the certification of Truth, Accuracy & Completeness certification by the responsible official. This attachment also contains the Title V application forms for this project. Attachment 3 contains technical specification sheets for the engine.

Sincerely,

John Harris, Director
Facilities, Environmental, and Systems Engineering

cc: Bill McCabe (TDEC, Nashville EFO) - **Submitted Electronically**

Attachment 1

Proposed Title V Permit Language

75-0155-XX	Diesel-Fired Emergency Reciprocating Internal Combustion Engine with Fire Pump for Integrated Logistics Center (ILC) NSPS (Subpart IIII), NESHAP (Subpart ZZZZ)
Conditions EXX-1 through EXX-19 apply to source 75-0155-XX.	

EXX-1. This source is subject to the Standards of Performance for Stationary Compression Ignition Internal Combustion Engines (40 CFR Part 60, Subpart IIII). The permittee shall comply with 40 CFR Part 60, Subpart IIII upon startup.

EXX-2. This source is subject to the National Emission Standards for Hazardous Air Pollutants for Stationary Reciprocating Internal Combustion Engines (40 CFR Part 63, Subpart ZZZZ). The permittee shall comply with 40 CFR Part 63, Subpart ZZZZ upon startup.

EXX-3. The maximum power output for each engine shall not exceed 260 horsepower (260 Hp).

EXX-4. Only No. 2 fuel oil and diesel fuel shall be used as fuels for this source.

EXX-5. Particulate Matter (TSP) emitted from this source (75-0155-XX) shall not exceed 0.20 grams per kilowatt-hour (0.09 lb/hr).

40 CFR §60.4205(c)

Compliance Method: The permittee shall assure compliance with this emission limitation by assuring compliance with **Conditions EXX-3, EXX-9, EXX-12, EXX-13, and EXX-16.**

EXX-6. Sulfur Dioxide (SO_2) emitted from this source (75-0155-XX) shall not exceed 0.54 pounds per hour.

TAPCR 1200-03-14-.03(5)

Compliance Method: The permittee shall assure compliance with this emission limitation by assuring compliance with **Conditions EXX-3, EXX-4, and EXX-10(1).** Compliance with this emission limitation is based on an emission factor of 0.00205 pounds of SO_2 per horsepower-hour (EPA AP-42, Section 3.3, October 1996).

EXX-7. Non-Methane Hydrocarbons and Nitrogen Oxides (NMHC + NO_X) emitted from this source (75-0155-XX) shall not exceed 4.0 grams per kilowatt-hour (1.72 lb/hr).

40 CFR §60.4205(c)

Compliance Method: The permittee shall assure compliance with this emission limitation by assuring compliance with **Conditions EXX-3, EXX-9, EXX-12, EXX-13, and EXX-16.**

EXX-8. Visible emissions from this source (75-0155-XX) shall not exceed the following:
a) Twenty percent (20%) opacity during the acceleration mode;
b) Fifteen percent (15%) opacity during the lugging mode; and
c) Fifty percent (50%) opacity during the peaks in either the acceleration or lugging modes.

The engine manufacturer is responsible for providing an engine that is compliant with these emission limitations.

40 CFR §60.4205(b); 40 CFR §60.4202(a)(2); and 40 CFR §89.113(a) and (b)

EXX-9. Pursuant to 40 CFR §60.4206, owners and operators of stationary CI ICE must operate and maintain stationary CI ICE that achieve the emission standards as required in 40 CFR §60.4205 over the entire life of the engine.

EXX-10. Pursuant to 40 CFR §60.4207(b), beginning October 1, 2010, the permittee shall use diesel fuel that meets the requirements of 40 CFR 80.510(b), as follows:
(1) Sulfur content shall not exceed 15 ppm maximum for nonroad diesel fuel.
(2) Cetane index or aromatic content, as follows:
(i) A minimum cetane index of 40; or
(ii) A maximum aromatic content of 35 volume percent.

EXX-11. Pursuant to 40 CFR §60.4209(a), for each emergency stationary CI internal combustion engine that does not meet the standards applicable to non-emergency engines, the permittee must install a non-resettable hour meter prior to startup of the engine.

EXX-12. Pursuant to 40 CFR §60.4211(a), the permittee must do all of the following, except as permitted under paragraph (4) of this condition:

(1) Operate and maintain the stationary CI internal combustion engine and control device according to the manufacturer's emission-related written instructions;

(2) Change only those emission related settings that are permitted by the manufacturer; and

(3) Meet the requirements of 40 CFR parts 89, 94 and/or 1068, as they apply to you.

(4) If the permittee does not install, configure, operate, and maintain the engine and control device according to the manufacturer's emission-related written instructions, or the permittee changes emission related settings in a way that is not permitted by the manufacturer, the permittee must keep a maintenance plan and records of conducted maintenance and must, to the extent practicable, maintain and operate the engine in a manner consistent with good air pollution control practice for minimizing emissions. In addition, the permittee must conduct an initial performance test to demonstrate compliance with the applicable emission standards within 1 year of startup, or within 1 year after an engine and control device is no longer installed, configured, operated, and maintained in accordance with the manufacturer's emission-related written instructions, or within 1 year after you change emission-related settings in a way that is not permitted by the manufacturer. The permittee must conduct subsequent performance testing every 8,760 hours of engine operation or 3 years, whichever comes first, thereafter to demonstrate compliance with the applicable emission standards.

EXX-13. The permittee shall comply with the PM and (NMHC + NOx) emission limitations by purchasing an engine certified to the emission standards in 40 CFR §60.4205(c) based on the model year and maximum engine power. The permittee shall maintain a record of this certification. The engine shall be installed and configured according to the manufacturer's emission-related specifications, except as permitted in paragraph (4) of **Condition EXX-12** of this permit. 40 CFR §60.4211(c)

EXX-14. Pursuant to 40 CFR §63.6605, the permittee must be in compliance with the emission limitations and operating limitations in 40 CFR 63, subpart ZZZZ that apply to the permittee at all times. At all times the permittee must operate and maintain any affected source, including associated air pollution control equipment and monitoring equipment, in a manner consistent with safety and good air pollution control practices for minimizing emissions. The general duty to minimize emissions does not require the permittee to make any further efforts to reduce emissions if levels required by this standard have been achieved. Determination of whether such operation and maintenance procedures are being used will be based on information available to the Technical Secretary which may include, but is not limited to, monitoring results, review of operation and maintenance procedures, review of operation and maintenance records, and inspection of the source.

EXX-15. Pursuant to 40 CFR 63.6645(e), the permittee must submit an Initial Notification not later than 120 days after the permittee becomes subject to 40 CFR 63, subpart ZZZZ (upon engine startup).

EXX-16. The permittee must keep monthly records of the hours of operation of the engine that are recorded through the non-resettable hour meter. The permittee shall calculate the operating hours during the calendar year. The permittee shall maintain the following log format or an alternative format which readily provides the same required information.

Logs for each emergency stationary RICE

Month, Year	Emergency Operation (hr/month)	Emergency Operation (hr/year)	Maintenance Checks and Readiness Testing (hr/mon)	Maintenance Checks and Readiness Testing (hr/calendar year)	Non-Emergency Operation (hr/mon)	Non-Emergency Operation (hr/calendar year)
				Column A		Column B
January						
February						
Etc.						
December						

EXX-17. Pursuant to 40 CFR §60.4211(f), there is no time limit on the use of emergency stationary ICE in emergency situations.

EXX-18. For fee purposes, the permittee shall calculate emissions of particulate matter (PM), sulfur dioxide (SO_2), volatile organic compounds (VOC), and nitrogen oxide (NO_x). The permittee shall utilize the emission factors listed in the table below. The permittee shall utilize the hours of operation from **Condition EXX-16**. The permittee shall maintain the following log format or an alternative format which readily provides the same required information.

Emission from July 1 to June 30 (Fee Accounting Period)

Pollutant	Emission Factors	Emission Factors Source	Hours of Operation (hr/yr)	Emissions (ton/yr)
PM	0.20 grams PM/kw-hr	NSPS standard		
SO_2	0.00205 lb SO2/MMBtu	AP-42, Section 3.3		
NMHC + NOx	4.0 grams NOx/kw-hr	NSPS standard		

Attachment 2

Statement of Truth, Accuracy & Completeness Certification
& APC Title V Application Forms

State of Tennessee
Department of Environment and Conservation
Division of Air Pollution Control
William R. Snodgrass Tennessee Tower
312 Rosa L. Parks Avenue, 15th Floor
Nashville, TN 37243
Telephone: (615) 532-0554

TITLE V PERMIT APPLICATION
INDEX OF AIR POLLUTION PERMIT APPLICATION FORMS

Section 1: Identification and Diagrams		
This application contains the following forms:	APC Form 1, Facility Identification	1
	APC Form 2, Operations and Flow Diagrams	1

Section 2: Emission Source Description Forms		
		Total number of this form
This application contains the following forms (one form for each incinerator, printing operation, fuel burning installation, etc.):	APC Form 3, Stack Identification	1
	APC Form 4, Fuel Burning Non-Process Equipment	
	APC Form 5, Stationary Gas Turbines or Internal Combustion Engines	1
	APC Form 6, Storage Tanks	
	APC Form 7, Incinerators	
	APC Form 8, Printing Operations	
	APC Form 9, Painting and Coating Operations	
	APC Form 10, Miscellaneous Processes	
	APC Form 33, Stage I and Stage II Vapor Recovery Equipment	
	APC Form 34, Open Burning	

Section 3: Air Pollution Control System Forms		
		Total number of this form
This application contains the following forms (one form for each control system in use at the facility):	APC Form 11, Control Equipment - Miscellaneous	
	APC Form 13, Adsorbers	
	APC Form 14, Catalytic or Thermal Oxidation Equipment	
	APC Form 15, Cyclones/Settling Chambers	
	APC Form 17, Wet Collection Systems	
	APC Form 18, Baghouse/Fabric Filters	

(OVER)

Section 4: Compliance Demonstration Forms

		Total number of this form
This application contains the following forms (one form for each incinerator, printing operation, fuel burning installation, etc.):	APC Form 19, Compliance Certification - Monitoring and Reporting - Description of Methods for Determining Compliance	1
	APC Form 20, Continuous Emissions Monitoring	
	APC Form 21, Portable Monitors	
	APC Form 22, Control System Parameters or Operating Parameters of a Process	
	APC Form 23, Monitoring Maintenance Procedures	
	APC Form 24, Stack Testing	
	APC Form 25, Fuel Sampling and Analysis	
	APC Form 26, Record Keeping	1
	APC Form 27, Other Methods	
	APC Form 28, Emissions from Process Emissions Sources / Fuel Burning Installations / Incinerators	1
	APC Form 29, Emissions Summary for the Facility or for the Source Contained in This Application	1
	APC Form 30, Current Emissions Requirements and Status	1
	APC Form 31, Compliance Plan and Compliance Certification	
	APC Form 32, Air Monitoring Network	

Section 5: Statement of Completeness and Certification of Compliance

I have reviewed this application in its entirety and to the best of my knowledge, and based on information and belief formed after reasonable inquiry, the statements and information contained in this application are true, accurate, and complete. I have provided all the information that is necessary for compliance purposes and this application consists of 25 pages and they are numbered from page Index 1 to 36-9. The status of this facility's compliance with all applicable air pollution control requirements, including the enhanced monitoring and compliance certification requirements of the Federal Clean Air Act, is reported in this application along with the methods to be used for compliance demonstration.

Name and Title of Responsible Official	Telephone Number with Area Code
John Harris, Director Facilities, Environmental and Systems Engineering	(615) 459-1400
Signature of Responsible Official	**Date of Application**
	6/16/16

(For definition of responsible official, see instructions for APC Form 1)

State of Tennessee
Department of Environment and Conservation
Division of Air Pollution Control
William R. Snodgrass Tennessee Tower
312 Rosa L. Parks Avenue, 15th Floor
Nashville, TN 37243
Telephone: (615) 532-0554

TITLE V PERMIT APPLICATION
FACILITY IDENTIFICATION

SITE INFORMATION				
1. Organization's legal name Nissan North America, Inc. - Smyrna			For APC Use Only	APC company point no.
2. Site name (if different from legal name)				APC Log/Permit no.
3. Site address (St./Rd./Hwy.) 983 Nissan Drive			NAICS or SIC Code NAICS Code 33611	
City or distance to nearest town Smyrna		Zip code 37167	County name Rutherford	
4. Site location (in Lat./Long)	Latitude UTM Vert. 3979390mN		Longitude UTM Horiz. 545540mE	
CONTACT INFORMATION (RESPONSIBLE OFFICIAL)				
5. Responsible official contact John Harris			Phone number with area code (615) 459-1400	
6. Mailing address (St./Rd./Hwy.) 983 Nissan Drive Bin 26D			Fax number with area code	
City Smyrna	State TN	Zip code 37167	Email address john.harris@nissan-usa.com	
CONTACT INFORMATION (TECHNICAL)				
7. Principal technical contact Mike Haverstick			Phone number with area code (615) 223-3902	
8. Mailing address (St./Rd./Hwy.) 983 Nissan Drive Bin 26D			Fax number with area code	
City Smyrna	State TN	Zip code 37167	Email address mike.haverstick@nissan-usa.com	
CONTACT INFORMATION (BILLING)				
11. Billing contact Mike Haverstick			Phone number with area code (615) 223-3902	
12. Mailing address (St./Rd./Hwy.) 983 Nissan Drive Bin 26D			Fax number with area code	
City Smyrna	State TN	Zip code 37167	Email address mike.haverstick@nissan-usa.com	

TYPE OF PERMIT REQUESTED

13. Permit requested for:

Initial application to operate:		Minor permit modification:	✓
Permit renewal to operate:		Significant modification:	
Administrative permit amendment:		Construction permit:	

(OVER)

HAZARDOUS AIR POLLUTANTS, DESIGNATIONS, AND OTHER PERMITS ASSOCIATED WITH FACILITY

14. Is this facility subject to the provisions governing prevention of accidental releases of hazardous air contaminants contained in Chapter 1200-03-32 of the Tennessee Air Pollution Control regulations?

☐ Yes ☑ No

If the answer is Yes, are you in compliance with the provisions of Chapter 1200-03-32 of the Tennessee Air Pollution Control regulations?

☐ Yes ☐ No

15. If facility is located in an area designated as "Non-Attainment" or "Additional Control", indicate the pollutant(s) for the designation.

NA

16. List all valid Air Pollution permits issued to the sources contained in this application [identify all permits with most recent permit numbers and emission source reference numbers listed on the permit(s)].

Nissan is requesting a Minor Modification to install Emergency Diesel Fire Pump at the new Integrated Logistics Center (ILC) on Sam Griffin Road. The new engine will be subject to the NESHAP 40 CFR Part 63 Subpart ZZZZ and the NSPS 40 CFR Part 60 Subpart IIII.

17. Page number: Page Number 2-2 | Revision number: Minor Modification #6 | Date of revision: June 2016

Table 2-1: Attachment to Ballot to Declare Major Source Fee Choice
Facility Name: Nissan North America, Inc. - Smyrna
File Number: 75-0155

Mixed Actual and Allowable Based Fee Table

Emission Source Description	ESRN	Title V Condition	PM	VOC	NOx	SO2	Non-VOC HAP
Paint Line 1 Body & Frame Pretreat Systems	75-0155-90	E11	NA	**Actual**	NA	NA	NA
Paint Line 1 Frame E-Coat Line	75-0155-07	E12	NA	**Actual**	NA	NA	NA
Paint Line 2 Pretreatment Line	75-0155-89	E21	NA	**Actual**	NA	NA	NA
Paint Line 2 Body E-Coat Line	75-0155-71	E22	NA	**Actual**	NA	NA	NA
Paint Line 2 Stoneguard and Cavity Wax Coating Line	75-0155-68	E23	Allowable	**Actual**	NA	NA	NA
Paint Line 2 Primer Coating Line	75-0155-66	E24	Allowable	**Actual**	NA	NA	NA
Paint Line 2 Topcoat Lines and Touch Up Operations	75-0155-64	E25	Allowable	**Actual**	NA	NA	NA
Paint Line 2 Cavity Wax Booth	75-0155-70	E26	Allowable	**Actual**	NA	NA	NA
Paint Line 2 Undercoat Booth	75-0155-25	E27	Allowable	**Actual**	NA	NA	NA
Fascia Paint Line 2 Plastics Coating Lines	75-0155-62	E32	Allowable	**Actual**	NA	NA	NA
Paint Line 1	75-0155-51	E35	Allowable	**Actual**	NA	NA	NA
Electrolyte Filling and Degassing	75-0155-33	E43	Allowable	**Actual**	NA	NA	NA
Service Parts E-Coat Line	75-0155-72	E41	Allowable	**Actual**	NA	NA	NA
Two Diesel-Fired Emergency RICE Generators	75-0155-37	E44	**Actual**	**Actual**	**Actual**	**Actual**	NA
Battery Sealers and Adhesives	75-0155-39	E45	NA	**Actual**	NA	NA	NA
Miscellaneous Solvent Usage	75-0155-22	E51	NA	**Actual**	NA	NA	NA
Miscellaneous Sealer and Adhesives	75-0155-78	E52	NA	**Actual**	NA	NA	NA
Three Natural Gas Fired Boilers	75-0155-01	E61	**Actual**	**Actual**	**Actual**	**Actual**	NA
Natural Gas Fuel Burning Facility Wide	75-0155-65	E62	**Actual**	**Actual**	**Actual**	**Actual**	NA
Paint Strip House	75-0155-61	E64	Allowable	**Actual**	NA	NA	NA
Frame Welding Process	75-0155-95	E65	Allowable	NA	NA	NA	NA
WWL Preparation Platforms (4) and Spray Booths with Ovens (2)	75-0155-26	E66	Allowable	**Actual**	NA	NA	NA
Facility Wide Gasoline Dispensing	75-0155-83	E67	NA	Allowable	NA	NA	NA
Shot Blasting Operation	75-0155-97	E68	Allowable	NA	NA	NA	NA
Windshield Washer Fluid Operations	75-0155-80	E70	NA	Allowable	NA	NA	NA
Natural Gas Fuel Burning Paint Line 1 and Fascia Paint Line 1 Paint Plants	75-0155-52	E71	**Actual**	**Actual**	**Actual**	**Actual**	NA
Paint Line 1 Natural Gas Generator	75-0155-28	E73	**Actual**	**Actual**	**Actual**	**Actual**	NA
Existing Emergency RICE Engines	75-0155-57	E75	**Actual**	**Actual**	**Actual**	**Actual**	NA
Natural Gas Fuel Burning Battery Assembly Plant	75-0155-56	E46	**Actual**	**Actual**	**Actual**	**Actual**	NA
Shot Blaster for Paint Line 1 with Dust Collector Control	75-0155-54	E69	Allowable	NA	NA	NA	NA
Fascia Paint Line 1 Plastics Parts Coating Line and Touch Up Operations	75-0155-53	E31	Allowable	**Actual**	NA	NA	NA
Two Emergency Diesel-Fired Reciprocation Internal Combustion Engines with Generators at Battery Plant	75-0155-55	E47	**Actual**	**Actual**	**Actual**	**Actual**	NA
ILC Emergency Diesel-Fired Fire Pump	75-0155-103	TBD	**Actual**	**Actual**	**Actual**	**Actual**	NA

NA - Not Applicable, pollutant not emitted from source

Allowable - Nissan has chosen to base emission fees on allowable emissions

Actual - Nissan has chosen to base emission fees on actual emissions

*** Natural Gas Emissions are based on Total Natural Gas used at the facility. Significant and Insignificant emission sources are included in the emission calculations.**

State of Tennessee
Department of Environment and Conservation
Division of Air Pollution Control
William R. Snodgrass Tennessee Tower
312 Rosa L. Parks Avenue, 15th Floor
Nashville, TN 37243
Telephone: (615) 532-0554

TITLE V PERMIT APPLICATION
OPERATIONS AND FLOW DIAGRAMS

1. Please list, identify, and describe briefly process emission sources, fuel burning installations, and incinerators that are contained in this application. Please attach a flow diagram for this application.

ILC Fire Pump, adding a 260 Hp diesel fired emergency engine to run a fire protection system

2. List all insignificant activities which are exempted because of size or production rate and cite the applicable regulations.

See Updated Attachment 1 to APC 2, Table 2-2 Trivial, Categorically Exempt and Insignificant Activities

3. Are there any storage piles?

YES _____ NO X

4. List the states that are within 50 miles of your facility.

None

5. Page number: 2-4 Revision Number: Minor Modification #6 Date of Revision: June 2016

DESCRIPTION	COMMENTS
Blanking Lines	1200-3-9-.04(5)(f)54. Equipment used exclusively for ... pressing, stamping, ... metals.
Stamping Press Lines	1200-3-9-.04(5)(f)54. Equipment used exclusively for ... pressing, stamping, ... metals.
Die Clean Booths	1200-3-9-.04(5)(a)4.(i) ... potential to emit <5 tons/yr of any regulated air pollutant ... or <1,000 lbs/yr of any HAP.
Stamping Laser Welding	1200-3-9-.04(5)(a)4.(i) ... potential to emit <5 tons/yr of any regulated air pollutant ... or <1,000 lbs/yr of any HAP.
Stamping and Body Shop Quality Assurance Testing	1200-3-9-.04(5)(a)4.(i) ... potential to emit <5 tons/yr of any regulated air pollutant ... or <1,000 lbs/yr of any HAP.
Body Laser Welding	1200-3-9-.04(5)(a)4.(i) ... potential to emit <5 tons/yr of any regulated air pollutant ... or <1,000 lbs/yr of any HAP.
Body Welding	1200-3-9-.04(5)(a)4.(i) ... potential to emit <5 tons/yr of any regulated air pollutant ... or <1,000 lbs/yr of any HAP.
Battery Case Welding Operation	1200-3-9-.04(5)(a)4.(i) ... potential to emit <5 tons/yr of any regulated air pollutant ... or <1,000 lbs/yr of any HAP.
Battery Charging Areas	1200-3-9-.04(5)(g)19. Batteries and battery charging stations, except at battery manufacturing plants.
Body Shop Layout Lab	1200-3-9-.04(5)(f)20. Equipment used for inspection of metal products.
Testing Lab	1200-3-9-.04(5)(f)19. Laboratory equipment…used for chemical and physical analysis....including ventilating and exhaust systems for laboratory hoods…
Zinc Digestion	1200-3-9-.04(5)(f)19. Laboratory equipment…used for chemical and physical analysis....including ventilating and exhaust systems for laboratory hoods…
Aluminum Scrap Shredder	1200-3-9-.04(5)(f)95. Equipment used to process or handle solid materials or solid wastes such as bottle smashers, bulb crushers, balers, compactors, and can punctures.
Paint Line 1 Paint Plant Cooling Tower	1200-3-9-.04(5)(f)15 water cooling towers…potential to emit <5 tons/yr of any regulated air pollutant ... or <1,000 lbs/yr of any HAP.
Paint Line 1 Metal Repair/Offline Booth	1200-3-9-.04(5)(a)4.(i) ... potential to emit <5 tons/yr of any regulated air pollutant ... or <1,000 lbs/yr of any HAP.
Paint Line 1 Cleaning Booth and Body Cavities	1200-3-9-.04(5)(f)18. Blast cleaning equipment ....

DESCRIPTION	COMMENTS
Paint Line 1 Acid Cleaning	1200-3-9-.04(5)(a)4.(i) ... potential to emit <5 tons/yr of any regulated air pollutant ... or <1,000 lbs/yr of any HAP.
Paint Line 1 Reverse Osmosis System	1200-3-9-.04(5)(a)4.(i) ... potential to emit <5 tons/yr of any regulated air pollutant ... or <1,000 lbs/yr of any HAP.
Paint Line 1 Phosphate Laboratory	1200-3-9-.04(5)(f)19. Laboratory equipment…used for chemical and physical analysis....including ventilating and exhaust systems for laboratory hoods…
Paint Line 1 Mix Room Fume Hood	1200-3-9-.04(5)(a)4.(i) ... potential to emit <5 tons/yr of any regulated air pollutant ... or <1,000 lbs/yr of any HAP.
Paint Line 1 Waste Solvent Tank	1200-3-9-.04(5)(a)4.(i) ... potential to emit <5 tons/yr of any regulated air pollutant ... or <1,000 lbs/yr of any HAP.
Paint Line 2 Damp Sand #4	1200-3-9-.04(5)(a)4.(i) ... potential to emit <5 tons/yr of any regulated air pollutant ... or <1,000 lbs/yr of any HAP.
Paint Line 2 Damp Sand #5	1200-3-9-.04(5)(a)4.(i) ... potential to emit <5 tons/yr of any regulated air pollutant ... or <1,000 lbs/yr of any HAP.
Paint Line 2 Damp Sand #6	1200-3-9-.04(5)(a)4.(i) ... potential to emit <5 tons/yr of any regulated air pollutant ... or <1,000 lbs/yr of any HAP.
Paint Line 2 Tutone Sand Booth	1200-3-9-.04(5)(a)4.(i) ... potential to emit <5 tons/yr of any regulated air pollutant ... or <1,000 lbs/yr of any HAP.
Paint Line 2 Major Metal Repair Booth	1200-3-9-.04(5)(a)4.(i) ... potential to emit <5 tons/yr of any regulated air pollutant ... or <1,000 lbs/yr of any HAP.
Paint Line 2 Carrier Cleaner	1200-3-9-.04(5)(f)18. Blast cleaning equipment ....
Paint Line 2 Acid Cleaning System	1200-3-9-.04(5)(a)4.(i) ... potential to emit <5 tons/yr of any regulated air pollutant ... or <1,000 lbs/yr of any HAP.
Paint Line 2 Reverse Osmosis System	1200-3-9-.04(5)(a)4.(i) ... potential to emit <5 tons/yr of any regulated air pollutant ... or <1,000 lbs/yr of any HAP.
Paint Line 2 Phosphate Laboratory	1200-3-9-.04(5)(f)19. Laboratory equipment…used for chemical and physical analysis....including ventilating and exhaust systems for laboratory hoods…

DESCRIPTION	COMMENTS
Paint Line 2 Mix Room Fume Hood	1200-3-9-.04(5)(f)19. Laboratory equipment, ... including ventilating and exhaust systems for laboratory hoods .... Emissions from the System 2 Mix Room are included in the System 2 Paint Plant surface coating emission units.
Component Assembly Lines	1200-3-9-.04(5)(a)4.(i) ... potential to emit <5 tons/yr of any regulated air pollutant ... or <1,000 lbs/yr of any HAP.
Engine Assembly Lines	1200-3-9-.04(5)(a)4.(i) ... potential to emit <5 tons/yr of any regulated air pollutant ... or <1,000 lbs/yr of any HAP.
Component Assembly Rear Axle Welding	1200-3-9-.04(5)(a)4.(i) ... potential to emit <5 tons/yr of any regulated air pollutant ... or <1,000 lbs/yr of any HAP.
Plastics Plant Fascia Molding	1200-3-9-.04(5)(f)24. Equipment used for compression molding ... of plastics ……...
Plastics Plant Extruder in the Repelletizing Operation Area	1200-3-9-.04(5)(f)51. Equipment used exclusively for rolling, forging, pressing, stamping, spinning, or extruding either hot or cold plastics provided hazardous air pollutants are not emitted.
Fascia Paint Line 2 Plastics Pretreatment Line	1200-3-9-.04(5)(a)4.(i) ... potential to emit <5 tons/yr of any regulated air pollutant ... or <1,000 lbs/yr of any HAP.
Fascia Paint Line 2 Sludge Pits	1200-3-9-.04(5)(a)4.(i) ... potential to emit <5 tons/yr of any regulated air pollutant ... or <1,000 lbs/yr of any HAP.
Plastics Plant Gasoline Tank Assembly Line	1200-3-9-.04(5)(a)4.(i) ... potential to emit <5 tons/yr of any regulated air pollutant ... or <1,000 lbs/yr of any HAP.
Fascia Paint Line 2 Subassembly Line	1200-3-9-.04(5)(a)4.(i) ... potential to emit <5 tons/yr of any regulated air pollutant ... or <1,000 lbs/yr of any HAP.
Fascia Paint Line 2 Plastics Test Oven	1200-3-9-.04(5)(a)4.(i) ... potential to emit <5 tons/yr of any regulated air pollutant ... or <1,000 lbs/yr of any HAP.
Fascia Paint Line 2 Plant Mix Room Fume Hood	1200-3-9-.04(5)(f)19. Laboratory equipment, ... including ventilating and exhaust systems for laboratory hoods .... Emissions from the System 3 Plastics Plant Mix Room are included in the System 3 Plastics Plant surface coating emission units.
Fascia Paint Line 2 Deionized Water System	1200-3-9-.04(5)(a)4.(i) ... potential to emit <5 tons/yr of any regulated air pollutant ... or <1,000 lbs/yr of any HAP.
Fascia Paint Line 2 Carrier Cleaning	1200-3-9-.04(5)(f)18. Blast cleaning equipment ....

DESCRIPTION	COMMENTS
Trim & Chassis Miscellaneous Fluid Fill Operations (PSF, Brake Fluid, Coolant Fill, WWF)	1200-3-9-.04(5)(a)4.(i) ... potential to emit <5 tons/yr of any regulated air pollutant ... or <1,000 lbs/yr of any HAP.
Final Repair Spray Gun Cleaner	1200-3-9-.04(5)(a)4.(i) ... potential to emit <5 tons/yr of any regulated air pollutant ... or <1,000 lbs/yr of any HAP.
Vehicle Staging Area	1200-3-9-.04(5)(f)1. Mobile sources ....
Water Test Booths	1200-3-9-.04(5)(f)12. Washing of trucks and vehicles ....
Secondary Water Test Booth	1200-3-9-.04(5)(f)12. Washing of trucks and vehicles ....
Vehicle Storage Area	1200-3-9-.04(5)(f)1. Mobile sources ....
Miscellaneous Touch up Pens/Markers	1200-3-9-.04(5)(a)4.(i) ... potential to emit <5 tons/yr of any regulated air pollutant ... or <1,000 lbs/yr of any HAP.
Emissions Test Lab II - Chassis Dynamometer Test Area	1200-3-9-.04(5)(a)4.(i) ... potential to emit <5 tons/yr of any regulated air pollutant ... or <1,000 lbs/yr of any HAP.
Emissions Test Laboratory II – Gasoline defueling & dispensing for EPA Emissions Test	1200-3-18-.02(4). These regulations do not apply to any equipment used exclusively for … product quality and commercial acceptance…and…total actual emissions…do not exceed 450 lbs in any calendar month. 1200-3-9-.04(5)(a)4.(i) ... potential to emit <5 tons/yr of any regulated air pollutant ... or <1,000 lbs/yr of any HAP.
Service Parts Pretreatment Line	1200-3-9-.04(5)(a)4.(i) ... potential to emit <5 tons/yr of any regulated air pollutant ... or <1,000 lbs/yr of any HAP.
Service Parts Phosphate Lab	1200-3-9-.04(5)(f)19. Laboratory equipment…used for chemical and physical analysis....including ventilating and exhaust systems for laboratory hoods…
Service Parts Acid Cleaning System	1200-3-9-.04(5)(a)4.(i) ... potential to emit <5 tons/yr of any regulated air pollutant ... or <1,000 lbs/yr of any HAP.
Boiler Water Treatment	1200-3-9-.04(5)(f)15. Boiler water treatment operations.
Boiler House	1200-3-9-.04(5)(f)86. Industrial-Commercial-Institutional Steam Generating Facility…not subject to NSPS.
Boiler House Cooling Tower	1200-3-9-.04(5)(f)15 water cooling towers…potential to emit <5 tons/yr of any regulated air pollutant ... or <1,000 lbs/yr of any HAP.
Maintenance Paint Booth in Paint Strip House	1200-3-9-.04(5)(a)4.(i) ... potential to emit <5 tons/yr of any regulated air pollutant ... or <1,000 lbs/yr of any HAP.
Miscellaneous Cooling Towers	1200-3-9-.04(f)15. Water cooling towers...

DESCRIPTION	COMMENTS
Wastewater Treatment Plant	1200-3-9-.04(5)(a)4.(i) ... potential to emit <5 tons/yr of any regulated air pollutant ... or <1,000 lbs/yr of any HAP. Emissions from the Painting Process are included in S1, S2, and S3 surface coating emission units.
Plant-wide Small Maintenance Parts Washers	1200-3-9-.04(5)(f)76. Parts washer where the vapor pressure of cleaners is <1.52 psia. 1200-3-9-.04(4)(d)15,16,22. Degreasing operations… 1200-3-9-.04(5)(a)4.(i) ... potential to emit <5 tons/yr of any regulated air pollutant ... or <1,000 lbs/yr of any HAP.
Training Center Welding, 020100P (75-0155-43)	1200-3-9-.04(5)(a)4.(i) ... potential to emit <5 tons/yr of any regulated air pollutant ... or <1,000 lbs/yr of any HAP.
Training Center Mix Room Fume Hood	1200-3-9-.04(5)(f)19. Laboratory equipment, ... including ventilating and exhaust systems for laboratory hoods .... Emissions from the Training Center Mix Room are included in S1 Topcoat surface coating emission units.
Building Maintenance, Maintenance Activities, Miscellaneous Activities, Maintenance Coating Activities	1200-3-9-.04(5)(f)45. Maintenance activities…
FAB Quality Lab - General Operations including hood	1200-3-9-.04(5)(f)19. Laboratory equipment, ... including ventilating and exhaust systems for laboratory hoods ....
FAB Quality Lab - Plasma Frame Cutting Station including hood	1200-3-9-.04(5)(a)4.(i) ... potential to emit <5 tons/yr of any regulated air pollutant ... or <1,000 lbs/yr of any HAP. 1200-3-9-.04(5)(f)19. Laboratory equipment, ... including ventilating and exhaust systems for laboratory hoods ....
FQC Repair Shop Exhaust System	1200-3-9-.04(5)(a)4.(i) ... potential to emit <5 tons/yr of any regulated air pollutant ... or <1,000 lbs/yr of any HAP.
FQC Machine Shot Blaster	1200-3-9-.04(5)(a)4.(i) ... potential to emit <5 tons/yr of any regulated air pollutant ... or <1,000 lbs/yr of any HAP.
FQC Shop Welding	1200-3-9-.04(5)(f)21…portable, hand operated brazing, soldering, or welding equipment.
FQC Vehicle Repair	1200-3-9-.04(5)(f)45. Maintenance activities…
FQC Motorsports - Chassis Dynamometer Test Area	1200-3-9-.04(5)(a)4.(i) ... potential to emit <5 tons/yr of any regulated air pollutant ... or <1,000 lbs/yr of any HAP.

DESCRIPTION	COMMENTS
FQC Vehicle Exhaust	1200-3-9-.04(5)(a)4.(i) ... potential to emit <5 tons/yr of any regulated air pollutant ... or <1,000 lbs/yr of any HAP.
WWL Body Welding	1200-3-9-.04(5)(a)4.(i) ... potential to emit <5 tons/yr of any regulated air pollutant ... or <1,000 lbs/yr of any HAP.
WWL Spray Gun Cleaning	1200-3-9-.04(5)(a)4.(i) ... potential to emit <5 tons/yr of any regulated air pollutant ... or <1,000 lbs/yr of any HAP.
Propane Cylinder and Aerosol Can De-Pressurization	1200-3-9-.04(5)(a)4.(i) ... potential to emit <5 tons/yr of any regulated air pollutant ... or <1,000 lbs/yr of any HAP.
Plant-wide Storage Tanks (with the exception of all gasoline dispensing tanks and the Windshield Washer Fluid Operations tank)	1200-3-9-.04(5)(a)4.(i) ... potential to emit <5 tons/yr of any regulated air pollutant ... or <1,000 lbs/yr of any HAP.
Battery Assembly Cooling Towers	1200-3-9-.04(5)(f)15 water cooling towers…potential to emit <5 tons/yr of any regulated air pollutant ... or <1,000 lbs/yr of any HAP.
Battery Assembly Roll Slitting Operation	1200-3-9-.04(5)(a)4.(i) ... potential to emit <5 tons/yr of any regulated air pollutant ... or <1,000 lbs/yr of any HAP.
Battery Assembly Roll Drying Operation	1200-3-9-.04(5)(a)4.(i) ... potential to emit <5 tons/yr of any regulated air pollutant ... or <1,000 lbs/yr of any HAP.
Battery Assembly Stacking Operation	1200-3-9-.04(5)(a)4.(i) ... potential to emit <5 tons/yr of any regulated air pollutant ... or <1,000 lbs/yr of any HAP.
Battery Assembly Cell Soaking	1200-3-9-.04(5)(a)4.(i) ... potential to emit <5 tons/yr of any regulated air pollutant ... or <1,000 lbs/yr of any HAP.
Battery Assembly Cell Rolling	1200-3-9-.04(5)(a)4.(i) ... potential to emit <5 tons/yr of any regulated air pollutant ... or <1,000 lbs/yr of any HAP.
Battery Assembly Ink Jet Printing	1200-3-9-.04(5)(a)4.(i) ... potential to emit <5 tons/yr of any regulated air pollutant ... or <1,000 lbs/yr of any HAP.
Battery Assembly Laser Trimming	1200-3-9-.04(5)(a)4.(i) ... potential to emit <5 tons/yr of any regulated air pollutant ... or <1,000 lbs/yr of any HAP.
Battery Assembly Laser Scribing	1200-3-9-.04(5)(a)4.(i) ... potential to emit <5 tons/yr of any regulated air pollutant ... or <1,000 lbs/yr of any HAP.
Miscellaneous Battery Assembly Operations	1200-3-9-.04(5)(a)4.(i) ... potential to emit <5 tons/yr of any regulated air pollutant ... or <1,000 lbs/yr of any HAP.

DESCRIPTION	COMMENTS
Battery Assembly Quality Control Lab	1200-3-9-.04(5)(f)19. Laboratory equipment…used for chemical and physical analysis....including ventilating and exhaust systems for laboratory hoods…
Fascia Paint Line 1 Cleaning Booth	1200-3-9-.04(5)(f)18. Blast cleaning equipment ....
Fascia Paint Line 1 Sludge Pits	1200-3-9-.04(5)(a)4.(i) ... potential to emit <5 tons/yr of any regulated air pollutant ... or <1,000 lbs/yr of any HAP.
Fascia Paint Line 1 Acid Cleaning	1200-3-9-.04(5)(a)4.(i) ... potential to emit <5 tons/yr of any regulated air pollutant ... or <1,000 lbs/yr of any HAP.
Miscellaneous Metal Repairs, Sealers and Adhesives	1200-3-9-.04(5)(a)4.(i) ... potential to emit <5 tons/yr of any regulated air pollutant ... or <1,000 lbs/yr of any HAP.
Smyrna Supplier Park Cooling Tower	1200-3-9-.04(5)(a)4.(i) ... potential to emit <5 tons/yr of any regulated air pollutant ... or <1,000 lbs/yr of any HAP.
Smyrna Supplier Park Resistance Welding	1200-3-9-.04(5)(a)4.(i) ... potential to emit <5 tons/yr of any regulated air pollutant ... or <1,000 lbs/yr of any HAP.
Smyrna Supplier Park, Parts Welding	1200-3-9-.04(5)(a)4.(i) ... potential to emit <5 tons/yr of any regulated air pollutant ... or <1,000 lbs/yr of any HAP.
Battery Assembly Dispenser Rebuilding Hood	1200-3-9-.04(5)(a)4.(i) ... potential to emit <5 tons/yr of any regulated air pollutant ... or <1,000 lbs/yr of any HAP.
Laser Plastic Cutting Operations for FPL1 and FPL2	1200-3-9-.04(5)(a)4.(i) ... potential to emit <5 tons/yr of any regulated air pollutant ... or <1,000 lbs/yr of any HAP.
WWL fueling vehicles not equipped with OBVR	1200-3-9-.04(5)(a)4.(i) ... potential to emit <5 tons/yr of any regulated air pollutant ... or <1,000 lbs/yr of any HAP.
Final Line fueling vehicles not equipped with OBVR	1200-3-9-.04(5)(a)4.(i) ... potential to emit <5 tons/yr of any regulated air pollutant ... or <1,000 lbs/yr of any HAP.
NADIS Final Line Dyno	1200-3-9-.04(5)(a)4.(i) ... potential to emit <5 tons/yr of any regulated air pollutant ... or <1,000 lbs/yr of any HAP.

State of Tennessee
Department of Environment and Conservation
Division of Air Pollution Control
William R. Snodgrass Tennessee Tower
312 Rosa L. Parks Avenue, 15th Floor
Nashville, TN 37243
Telephone: (615) 532-0554

TITLE V PERMIT APPLICATION
EMISSION SUMMARY FOR THE FACILITY OR FOR THE SOURCES CONTAINED IN THIS APPLICATION

GENERAL IDENTIFICATION AND DESCRIPTION

1. Facility name: Nissan North America, Inc. - Smyrna

EMISSIONS SUMMARY TABLE – CRITERIA AND SELECTED POLLUTANTS

2. Complete the following emissions summary for regulated air pollutants at this facility or for the sources contained in this application.

Air Pollutant	Summary of Maximum Allowable Emissions		Summary of Actual Emissions	
	Tons per Year	Reserved for State use (Pounds per Hour- Item 4, APC 28)	Tons per Year	Reserved for State use (Pounds per Hour- Item 4, APC 28)
Particulate Matter (TSP)	132.15		NA	
Sulfur Dioxide	6.20		NA	
Volatile Organic Compounds	2919.97		NA	
Carbon Monoxide	232.67		NA	
Lead	NA		NA	
Nitrogen Oxides	256.20		NA	
Total Reduced Sulfur	NA		NA	
Mercury	NA		NA	
Asbestos	NA		NA	
Beryllium	NA		NA	
Vinyl Chlorides	NA		NA	
Fluorides	NA		NA	
Gaseous Fluorides	NA		NA	
Greenhouse Gases in CO_2 Equivalents	321,423.60		NA	

(Continued on next page)

(Continued from previous page)

EMISSIONS SUMMARY TABLE – HAZARDOUS AIR POLLUTANTS

3. Complete the following emissions summary for regulated air pollutants that are hazardous air pollutant(s) at this facility or for the sources contained in this application.

Air Pollutant & CAS	Summary of Maximum Allowable Emissions		Summary of Actual Emissions	
	Tons per Year	Reserved for State use (Pounds per Hour- Item 5, APC 28)	Tons per Year	Reserved for State use (Pounds per Hour- Item 5, APC 28)
PM HAPs	NA		NA	
Gaseous VOC HAPs	NA		NA	
Gaseous Non VOC HAPs	NA		NA	
Beryllium Compounds	NA		NA	
Hydrogen Chloride	NA		NA	
Hydrogen Fluoride	NA		NA	
Lead Compounds	NA		NA	

4. Page number: 2-13 Revision number: Minor Modification #6 Date of revision: June 2016

Attachment 1 Table 2-3 for APC V.29 ALLOWABLE EMISSIONS FOR THE NNA-S FACILITY

Emission Source Description	Plant Area	Title V Condition Number	Title V ESRN	Permit Number	PM (lb/hr)	PM (tpy)	VOC (lb/hr)	VOC (tpy)	CO (lb/hr)	CO (tpy)	CO2e (lb/hr)	CO2e (tpy)	(NMHC+)NOx (lb/hr)	(NMHC+)NOx (tpy)	SO2 (lb/hr)	SO2 (tpy)	Beryllium (tpy)	Non-VOC HAP (tpy)	Comments
Paint Line 1 Frame & Body Pretreat Systems	Paint Line 1	E11	75-0155-90	568333	-	-	-	10.00	-	-	-	-	-	-	-	-	-	-	
Paint Line 1 Frame E-Coat Line	Fascia Paint Line 1	E12	75-0155-07	568333	-	-	-	63.00	-	-	-	-	-	-	-	-	-	-	
Paint Line 2 Pretreatment Line	Paint Line 2	E21	75-0155-89	568333	-	-	-	9.53	-	-	-	-	-	-	-	-	-	-	
Paint Line 2 Body E-Coat Line	Paint Line 2	E22	75-0155-71	568333	-	-	-	79.2	-	-	-	-	-	-	-	-	-	-	
Paint Line 2 Stoneguard and Cavity Wax Coating Line	Paint Line 2	E23	75-0155-68	568333	0.02	0.04	-	44.0	-	-	-	-	-	-	-	-	-	-	
Paint Line 2 Primer Coating Line	Paint Line 2	E24	75-0155-66	568333	0.9	3.94	-	258.20	-	-	-	-	-	-	-	-	-	-	
Paint Line 2 Topcoat Lines and Touch Up Operations	Paint Line 2	E25	75-0155-64	568333	1.51	6.61	-	441.6	-	-	-	-	-	-	-	-	-	-	
Paint Line 2 Cavity Wax Booth	Paint Line 2	E26	75-0155-70	568333	0.02	0.1	-	42.2	-	-	-	-	-	-	-	-	-	-	
Paint Line 2 Undercoat Booth	Paint Line 2	E27	75-0155-25	568333	0.07	0.15	-	17.9	-	-	-	-	-	-	-	-	-	-	
Fascia Paint Line 2 Plastics Coating Lines	Fascia Paint Line 2	E32	75-0155-62	568333	5.6	15.8	-	388.8	-	-	-	-	-	-	-	-	-	-	
Paint Line 1	Paint Line 1	E35	75-0155-51	568333	10.33	45.25	-	550.00	-	-	-	-	-	-	-	-	-	-	
Electrolyte Filling and Degassing	Battery Plant	E43	75-0155-33	568333	-	-	-	40.70	-	-	-	-	-	-	-	-	-	-	
Service Parts E-Coat Line	Service Parts	E41	75-0155-72	568333	-	-	-	20.0	-	-	-	-	-	-	-	-	-	-	
Two Diesel-Fired Emergency RICE Generators[1]	Battery Plant	E44	75-0155-37	568333	0.62	0.13	1.32	0.28	10.8	2.3	-	-	19.76	4.2	0.04	0.009	-	-	Total hours of operation limited to 856 hr during all intervals of twelve months
Battery Sealers and Adhesives	Battery Plant	E45	75-0155-39	568333	-	-	-	32.00	-	-	-	-	-	-	-	-	-	-	
Miscellaneous Solvent Usage	Entire Facility	E51	75-0155-22	568333	-	-	-	575.00	-	-	-	-	-	-	-	-	-	-	
Miscellaneous Sealer and Adhesives	Entire Facility	E52	75-0155-78	568333	-	-	-	101.33	-	-	-	-	-	-	-	-	-	-	
Three Natural Gas Fired Boilers	Boiler House	E61	75-0155-01	568333	3.0	13.14	-	3.7	-	50.4	-	72,167	6.25	22.2	1.0	4.38	-	-	
Natural Gas Fuel Burning Facility Wide[2]	Entire Facility	E62	75-0155-65	568333	8.01	11.70	1.93	8.50	29.5	129.3	-	185,151	35.1	153.9	0.42	0.92	-	-	
Paint Strip House	Paint Strip House	E64	75-0155-61	568333	2.02	8.85	-	15.0	-	-	-	-	-	-	-	-	-	-	
Frame Welding Process	Not Operating (Supplier Park)	E65	75-0155-95	568333	1.0	4.38	-	-	-	-	-	-	-	-	-	-	-	-	
WWL Preparation Platforms (4) and Spray Booths with Ovens (2)	WWL	E66	75-0155-26	568333	2.00	8.76	-	8.4	-	-	-	-	-	-	-	-	-	-	
Facility Wide Gasoline Dispensing	Entire Facility	E67	75-0155-83	568333	-	-	-	5.10	-	-	-	-	-	-	-	-	-	-	
Shot Blasting Operation	Paint Strip House	E68	75-0155-97	568333	0.5	2.19	-	-	-	-	-	-	-	-	-	-	-	-	
Windshield Washer Fluid Operations	Trim and Chassis	E70	75-0155-80	568333	-	-	-	1.0	-	-	-	-	-	-	-	-	-	-	
Natural Gas Fuel Burning Paint Line 1 and Fascia Paint Line 1 Paint Plants	Paint Line 1 and Fascia Paint Line 1	E71	75-0155-52	568333	-	3.04	-	2.20	-	33.6	-	48,111	-	34.00	-	0.24	-	-	Natural Gas usage shall not exceed 800 MMcf during all intervals of 12 consecutive months.
Paint Line 1 Natural Gas Generator	Paint Line 1	E73	75-0155-28	568333	0.024	0.006	1.031	0.26	4.125	1.031	-	-	2.063	0.52	0.002	0.0005	-	-	Total hours of operation limited to 500 hr during all intervals of twelve months
Existing Emergency RICE Engines[1]	Entire Facility	E75	75-0155-57	568333	2.86	0.72	4.48	1.12	17.32	4.33	1,154.61	789.96	107.93	26.98	1.73	0.43	-	-	
Natural Gas Fuel Burning Battery Assembly Plant	Battery Plant	E46	75-0155-56	568333	-	0.95	-	0.69	-	10.5	-	15,035	-	12.50	-	0.075	-	-	Natural Gas usage shall not exceed 250 MMcf during all intervals of 12 consecutive months.
Shot Blaster for Paint Line 1 with Dust Collector Control	Paint Line 1	E69	75-0155-54	568333	0.2	0.88	-	-	-	-	-	-	-	-	-	-	-	-	
Fascia Paint Line 1 Plastics Parts Coating Line and Touch Up Operations	Fascia Paint Line 1	E31	75-0155-53	568333	1.25	5.48	-	200.00	-	-	-	-	-	-	-	-	-	-	
Two Emergency Diesel-Fired Reciprocation Internal Combustion Engines with Generators at Battery Plant	Battery Plant	E47	75-0155-55	568333	1.92	0.048	4.1	0.1	33.63	0.84	-	169	61.5	1.5	0.11	0.003	-	-	Total hours of operation limited to 100 hr during all intervals of twelve months
ILC Emergency Fire Pump	ILC	TBD	75-0155-103	568333	0.09	0.023	0.6	0.16	1.50	0.37			1.72	0.4	0.54	0.135	-	-	
					41.94	132.15	13.49	2,919.97	96.88	232.67	1,154.61	321,423.60	234.32	256.20	3.84	6.20	-	-	

Notes:
1 - CO2e for emergency RICE engiens is calculated based on CO2 only, equivalence green house gases are not included in calculation.
2 - The facililty has accepted a Natural Gas Limit for Source 65.

Section 36
ILC FIRE PUMP (Source 103)

This source is being added through Minor Modification #6. The source should be operational by September of 2016.

APC 5	ILC Fire Pump Engine Source
APC 3	ILC Fire Pump Emission Stack
APC 30	Compliance Requirements Spark Ignition
APC 19	Description of Compliance
APC 26	Compliance Demonstration by Recordkeeping
APC 28	Existing Emergency Engines Emissions
Calculations	Emission Calculations

State of Tennessee
Department of Environment and Conservation
Division of Air Pollution Control
William R. Snodgrass Tennessee Tower
312 Rosa L. Parks Avenue, 15th Floor
Nashville, TN 37243
Telephone: (615) 532-0554

TITLE V PERMIT APPLICATION
STATIONARY GAS TURBINE OR INTERNAL COMBUSTION ENGINE

GENERAL IDENTIFICATION AND DESCRIPTION

1. **Facility name:**
Nissan North America, Inc. - Smyrna

2. **Stack ID or flow diagram point identification (s):**
Source 103

GAS TURBINE OR INTERNAL COMBUSTION ENGINE DESCRIPTION

3. List all gas turbines and internal combustion engines at this facility on a separate sheet, and please complete an APC 5 form for each piece of equipment.
ILC Fire Pump

4. Manufacturer and model number:
John Deer, JU6H-UFADS0

5. Equipment description:
Emergency engine to power a fire pump. The engine is planned to be a 260 Hp John Deer engine.

6. Date of installation or last modification of equipment:
September 2016

7. Rated heat input capacity (in million BTU/Hour) and rated horsepower:
1.79 MMBtu/hr and 260 Hp

State which heating value was utilized:
140,000 MMBtu/hr Higher heating value
N/A Lower heating value

8. If equipment is a gas turbine, list type:
_____ Simple cycle
_____ Regenerative cycle
_____ Combined cycle

9. Location of this fuel burning installation in UTM coordinates: UTM Vertical: _____ UTM Horizontal: _____

10. Normal operating schedule: N/A Hrs./Day N/A Days/Wk. N/A Days/Yr. 500 hr/yr, Emergency Operation

FUEL DESCRIPTION

11. Fuels:	Primary fuel	Backup fuel #1	Backup fuel #2	Backup fuel #3
Fuel name	Diesel			
Actual yearly consumption	6,400 gal/yr			

12. (For NSPS turbines only) Manufacturer's rated heat rate at manufacturer's rated peak load (kilojoules per watt hour), or actual measured heat rate based on lower heating value of fuel as measured at actual peak load for the unit:
N/A

13. Page number: Page 36-2 Revision Number: Minor Modification #6 Date of Revision: June 2016

State of Tennessee
Department of Environment and Conservation
Division of Air Pollution Control
William R. Snodgrass Tennessee Tower
312 Rosa L. Parks Avenue, 15th Floor
Nashville, TN 37243
Telephone: (615) 532-0554

TITLE V PERMIT APPLICATION
STACK IDENTIFICATION

GENERAL IDENTIFICATION AND DESCRIPTION

1. **Facility name:**
   Nissan North America, Inc. - Smyrna

2. **Emission source (identify):**
   ILC Fire Pump Diesel Engine

STACK DESCRIPTION

3. Stack ID (or flow diagram point identification):
   Source 103

4. Stack height above grade in feet:
   11 feet

5. Velocity (data at exit conditions):
   128 _____ (Actual feet per second)

6. Inside dimensions at outlet in feet:
   0.5 feet

7. Exhaust flow rate at exit conditions (ACFM):
   1500 ACFM

8. Flow rate at standard conditions (DSCFM):
   TBD

9. Exhaust temperature:
   848 _____ Degrees Fahrenheit (°F)

10. Moisture content (data at exit conditions):
    TBD _____ Percent TBD _____ Grains per dry standard cubic foot (gr./dscf.)

11. Exhaust temperature that is equaled or exceeded during ninety (90) percent or more of the operating time (for stacks subject to diffusion equation only):
    NA _____ (°F)

12. If this stack is equipped with continuous pollutant monitoring equipment required for compliance, what pollutant(s) does this equipment monitor (e.g., Opacity, SO_2, NO_x, etc.)?
    NA

Complete the appropriate APC form(s) 4, 5, 7, 8, 9, or 10 for each source exhausting through this stack.

BYPASS STACK DESCRIPTION

13. Do you have a bypass stack?
    _____ Yes X _____ No

    If yes, describe the conditions which require its use & complete APC form 4 for the bypass stack. Please identify the stack number(s) of flow diagram point number(s) exhausting through this bypass stack.

14. Page number: 36-3 Revision Number: Minor Modification #6 Date of Revision: June 2016

State of Tennessee
Department of Environment and Conservation
Division of Air Pollution Control
William R. Snodgrass Tennessee Tower
312 Rosa L. Parks Avenue, 15th Floor
Nashville, TN 37243
Telephone: (615) 532-0554

TITLE V PERMIT APPLICATION
CURRENT EMISSIONS REQUIREMENTS AND STATUS

GENERAL IDENTIFICATION AND DESCRIPTION

1. Facility name:	2. Emission source number
Nissan North America, Inc. - Smyrna	Source 103

3. Describe the process emission source / fuel burning installation / incinerator.

ILC Fire Pump

EMISSIONS AND REQUIREMENTS

4. Identify if only a part of the source is subject to this requirement	5. Pollutant	6. Applicable requirement(s): TN Air Pollution Control Regulations, 40 CFR, permit restrictions, air quality based standards	7. Limitation	8. Maximum actual emissions	9. Compliance status (In/Out)
All	HAP	40 CFR 63 Subpart ZZZZ 40 CFR §63.6590(b)(1)(i)	Initial Notification (only)	Submit Initial Notification (only)	IN
All	PM	40 CFR 60 Subpart IIII 40 CFR §60.4205(c)	0.20 g/kW-hr	< 0.20 g/kW-hr	IN
All	NOx + NMHC	40 CFR 60 Subpart IIII 40 CFR §60.4205(b)	4.0 g/kW-hr	< 4.0 g/kW-hr	IN
All	SO2	TAPCR 1200-03-14-.03(5)	0.52 lb/hr	< 0.52 lb/hr	IN
All	Sulfur Content	40 CFR 80.5110(b)	15 ppm max	< 15 ppm max	IN

10. Other applicable requirements (new requirements that apply to this source during the term of this permit)

11. Page number:	Revision number:	Date of revision:
36-4	Minor Modification #6	June 2016

State of Tennessee
Department of Environment and Conservation
Division of Air Pollution Control
William R. Snodgrass Tennessee Tower
312 Rosa L. Parks Avenue, 15th Floor
Nashville, TN 37243
Telephone: (615) 532-0554

TITLE V PERMIT APPLICATION
COMPLIANCE CERTIFICATION - MONITORING AND REPORTING
DESCRIPTION OF METHODS USED FOR DETERMINING COMPLIANCE

All sources that are subject to 1200-03-09-.02(11) of the Tennessee Air Pollution Control Regulations are required to certify compliance with all applicable requirements by including a statement within the permit application of the methods used for determining compliance. This statement must include a description of the monitoring, recordkeeping, and reporting requirements and test methods. In addition, the application must include a schedule for compliance certification submittals during the permit term. These submittals must be no less frequent than annually and may need to be more frequent if specified by the underlying applicable requirement or the Technical Secretary.

GENERAL IDENTIFICATION AND DESCRIPTION

1. Facility name: Nissan North America, Inc. - Smyrna
2. Process emission source, fuel burning installation, or incinerator (identify): ILC Fire Pump
3. Stack ID or flow diagram point identification(s): Source 103

METHODS OF DETERMINING COMPLIANCE

4. This source as described under Item #2 of this application will use the following method(s) for determining compliance with applicable requirements (and special operating conditions from an existing permit). Check all that apply and attach the appropriate form(s)

[ ] Continuous Emission Monitoring (CEM) - APC 20
Pollutant(s): _____

[ ] Emission Monitoring Using Portable Monitors - APC 21
Pollutant(s): _____

[ ] Monitoring Control System Parameters or Operating Parameters of a Process - APC 22
Pollutant(s): _____

[ ] Monitoring Maintenance Procedures - APC 23
Pollutant(s): _____

[ ] Stack Testing - APC 24
Pollutant(s): _____

[ ] Fuel Sampling & Analysis (FSA) - APC 25
Pollutant(s): _____

[✓] Recordkeeping - APC 26
Pollutant(s): PM, NOx, and NMHC

[ ] Other (please describe) - APC 27
Pollutant(s): _____

5. Compliance certification reports will be submitted to the Division according to the following schedule:
Start date: As required by permit
And every 365 days thereafter.

6. Compliance monitoring reports will be submitted to the Division according to the following schedule:
Start date: As required by permit
And every 180 days thereafter.

7. Page number: 36-5 Revision number: Minor Modification #6 Date of revision: June 2016

State of Tennessee
Department of Environment and Conservation
Division of Air Pollution Control
William R. Snodgrass Tennessee Tower
312 Rosa L. Parks Avenue, 15th Floor
Nashville, TN 37243
Telephone: (615) 532-0554

TITLE V PERMIT APPLICATION
COMPLIANCE DEMONSTRATION BY RECORDKEEPING

Recordkeeping shall be acceptable as a compliance demonstration method provided that a correlation between the parameter value recorded and the applicable requirement is established.

GENERAL IDENTIFICATION AND DESCRIPTION

1. Facility name:
   Nissan North America, Inc. - Smyrna

2. Stack ID or flow diagram point identification(s):
   Source 103

3. Emission source (identify):
   ILC Fire Pump

MONITORING AND RECORDKEEPING DESCRIPTION

4. Pollutant(s) or parameter being monitored:
   PM, NOx, and NMHC

5. Material or parameter being monitored and recorded:
   Operating hours, Maintenance, and Sulfur Content of Fuel

6. Method of monitoring and recording:
   Hours meter
   Monitor maintenance and preventative maintenance (PM) activities.
   Sulfur content of fuel certified by supplier.

7. Compliance demonstration frequency (specify the frequency with which compliance will be demonstrated):
   Monthly log of operating hours

8. Page number: 36-6
   Revision number: Minor Modification #6
   Date of revision: June 2016

State of Tennessee
Department of Environment and Conservation
Division of Air Pollution Control
William R. Snodgrass Tennessee Tower
312 Rosa L. Parks Avenue, 15th Floor
Nashville, TN 37243
Telephone: (615) 532-0554

TITLE V PERMIT APPLICATION
EMISSIONS FROM PROCESS EMISSION SOURCE / FUEL BURNING INSTALLATION / INCINERATOR

GENERAL IDENTIFICATION AND DESCRIPTION

1. Facility name: Nissan North America, Inc. - Smyrna
2. Stack ID or flow diagram point identification(s): Source 103
3. Process emission source / Fuel burning installation / Incinerator (identify): ILC Fire Pump

EMISSIONS SUMMARY TABLE – CRITERIA AND FUGITIVE EMISSIONS

4. Complete the following emissions summary for regulated air pollutants. Fugitive emissions shall be included. Attach calculations and emission factor references.

Air Pollutant	Maximum Allowable Emissions		Actual Emissions	
	Tons per Year	Reserved for State use (Pounds per Hour - Item 7, APC 30)	Tons per Year	Reserved for State use (Pounds per Hour- Item 8, APC 30)
Particulate Matter (TSP)	0.023		NA	
(Fugitive Emissions)	NA		NA	
Sulfur Dioxide	0.135		NA	
(Fugitive Emissions)	NA		NA	
Volatile Organic Compounds	0.17		NA	
(Fugitive Emissions)	NA		NA	
Carbon Monoxide	0.37		NA	
(Fugitive Emissions)	NA		NA	
Lead	NA		NA	
(Fugitive Emissions)	NA		NA	
Nitrogen Oxides	0.40		NA	
(Fugitive Emissions)	NA		NA	
Total Reduced Sulfur	NA		NA	
(Fugitive Emissions)	NA		NA	
Mercury	NA		NA	
(Fugitive Emissions)	NA		NA	

(Continued on next page)

(Continued from last page)

AIR POLLUTANT	Maximum Allowable Emissions		Actual Emissions	
	Tons per Year	Reserved for State use (Pounds per Hour - Item 7, APC 30)	Tons per Year	Reserved for State use (Pounds per Hour- Item 8, APC 30)
Asbestos	NA		NA	
(Fugitive Emissions)	NA		NA	
Beryllium	NA		NA	
(Fugitive Emissions)	NA		NA	
Vinyl Chloride	NA		NA	
(Fugitive Emissions)	NA		NA	
Fluorides	NA		NA	
(Fugitive Emissions)	NA		NA	
Gaseous Fluorides	NA		NA	
(Fugitive Emissions)	NA		NA	
Greenhouse Gases in CO_2 Equivalents	NA		NA	

EMISSIONS SUMMARY TABLE – FUGITIVE HAZARDOUS AIR POLLUTANTS

5. Complete the following emissions summary for regulated air pollutants that are hazardous air pollutant(s). Fugitive emissions shall be included. Attach calculations and emission factor references.

Air Pollutant & CAS	Maximum Allowable Emissions		Actual Emissions	
	Tons per Year	Reserved for State use (Pounds per Hour - Item 7, APC 30)	Tons per Year	Reserved for State use (Pounds per Hour- Item 8, APC 30)
Particulate HAPs	NA		NA	
Gaseous VOC HAPs	NA		NA	
Gaseous NonVOC HAPs	NA		NA	

6. Page number: 36-8 Revision number: Minor Modification #6 Date of revision June 2016

ILC Fire Pump

ILC Fire Pump
Manufacturer: **John Deer Co.**
Model: **JU6H-UFADS0**
Year: **2016** Tier 3 Engine Certification from EPA for John Deer and Clarke Fire Protection Products, Inc., 2016 Model Year

Maximum fuel flow:	12.8 gal/hr	From:	Cummins Set Data Sheet
Heat content:	140,000 Btu/gal for diesel		
Heat input capacity:	1.79 MMBtu/hr		
Engine rating:	260 hp	From:	Clake Installation & Operation Data (I&O Data)
Engine output:	194 kW	From:	Clake Installation & Operation Data (I&O Data)
Displacement per Cylinder:	6.8 Liters	From:	Clake Installation & Operation Data (I&O Data)

Pollutant	Emission Rate		Emission Rate		Maximum Hourly Emissions lbs/hr	Fire Pump Engine PTE tpy	Basis for Emission Factors
	Rate	Units	Rate	Units			
PM, PM10 or PM2.5	0.20	g/kW-hr	-	-	0.09	0.023	40 CFR §60.4202(d), §60.4205(c), and Table 4
SO2	-	-	2.05E-03	lb/hp-hr	0.54	0.135	AP-42, Table 3.3-1
NMHC and NOx	4.0	g/kW-hr	2.98	g/hp-hr	1.72	0.40	40 CFR §60.4202(d), §60.4205(c), and Table 4
CO	3.5	g/kW-hr	2.61	g/hp-hr	1.50	0.37	40 CFR §60.4202(d), §60.4205(c), and Table 4
VOCs	-	-	2.51E-03	lb/hp-hr	0.66	0.17	AP-42, Table 3.3-1
HAPs							
Benzene			9.33E-04	lb/MMBtu	1.7E-03	4.2E-04	AP-42, Table 3.3-2
Toluene			4.09E-04	lb/MMBtu	7.3E-04	1.8E-04	AP-42, Table 3.3-2
Xylenes			2.85E-04	lb/MMBtu	5.1E-04	1.3E-04	AP-42, Table 3.3-2
1,3-Butadiene			3.91E-05	lb/MMBtu	7.0E-05	1.8E-05	AP-42, Table 3.3-2
Formaldehyde			1.18E-03	lb/MMBtu	2.1E-03	5.3E-04	AP-42, Table 3.3-2
Acetaldehyde			7.67E-04	lb/MMBtu	1.4E-03	3.4E-04	AP-42, Table 3.3-2
Acrolein			9.25E-05	lb/MMBtu	1.7E-04	4.1E-05	AP-42, Table 3.3-2
Polycyclic Organic Matter (POM) as Polycyclic aromatic Hydrocarbons(PAH)							
Naphthalene			8.48E-05	lb/MMBtu	1.5E-04	3.8E-05	AP-42, Table-3.3-2
Acenaphthylene			5.06E-06	lb/MMBtu	9.1E-06	2.3E-06	AP-42, Table-3.3-2
Acenaphthene			1.42E-06	lb/MMBtu	2.5E-06	6.4E-07	AP-42, Table-3.3-2
Fluorene			2.92E-05	lb/MMBtu	5.2E-05	1.3E-05	AP-42, Table-3.3-2
Phenanthrene			2.94E-05	lb/MMBtu	5.3E-05	1.3E-05	AP-42, Table-3.3-2
Anthracene			1.87E-06	lb/MMBtu	3.4E-06	8.4E-07	AP-42, Table-3.3-2
Fluoranthene			7.61E-06	lb/MMBtu	1.4E-05	3.4E-06	AP-42, Table-3.3-2
Pyrene			4.78E-06	lb/MMBtu	8.6E-06	2.1E-06	AP-42, Table-3.3-2
Benz(a)anthracene			1.68E-06	lb/MMBtu	3.0E-06	7.5E-07	AP-42, Table-3.3-2
Chrysene			3.53E-07	lb/MMBtu	6.3E-07	1.6E-07	AP-42, Table-3.3-2
Benzo(b)fluoranthene			9.91E-08	lb/MMBtu	1.8E-07	4.4E-08	AP-42, Table-3.3-2
Benzo(k)fluoranthene			1.55E-07	lb/MMBtu	2.8E-07	6.9E-08	AP-42, Table-3.3-2
Benzo(a)pyrene			1.88E-07	lb/MMBtu	3.4E-07	8.4E-08	AP-42, Table-3.3-2
Indeno(1,2,3-cd)pyrene			3.75E-07	lb/MMBtu	6.7E-07	1.7E-07	AP-42, Table-3.3-2
Dibenz(a,h)anthracene			5.83E-07	lb/MMBtu	1.0E-06	2.6E-07	AP-42, Table-3.3-2
Benzo(g,h,l)perylene			4.89E-07	lb/MMBtu	8.8E-07	2.2E-07	AP-42, Table-3.3-2
Total POM as PAH			1.68E-04	lb/MMBtu	3.0E-04	7.5E-05	AP-42, Table-3.3-2
TOTAL HAPs					**6.94E-03**	**1.74E-03**	

Conversion factor: 453.5924 g/lb
PTE operating hours: 500 hrs/yr
(Allowed PTE for emergency generators as per the second Title V White Paper. Has also been allowed for other emergency equipment by TDAPC)

NOTES: Emission calculations are based on rule and AP-42 and 40 CFR 60 Subpart IIII.
1. Technical specification information provided by Shambaugh & Son LP
2. The engine has an Inline-6, 4-stroke-cycle, water-cooled compression ignition design.
3. SO2 emission factor based on AP-42 emission factor, Table 3.3-1, which does not considers a variable sulfur content of diesel fuel.
4. Maximum hourly emissions (lbs/hr) = emission factor (g/hp-hr) x engine rating (hp) ÷ 453.59 g/lb.
5. Fire Pump Engine PTE (tons/yr) = emission rate (lb/hr) x PTE operating hours (hrs/yr) ÷ 2000 lb/ton.
6. CO emission factor is assumed to be the same as for engines that pre-date 2009 models.

Attachment 3

Clarke Fire Protection Products, Inc.
Engine Information

Clarke...the first name in fire protection.

DOCUMENTS

- Specification Sheet
- Power Curve
- Installation and Operations Data
- Material/Construction
- Installation Drawing
- Emission Data
- Noise Data

FORMS

- Proposal

ADDITIONAL RESOURCES

- Operations Manual
- Wiring Diagrams
- General Data
- NFPA20 Reference Data
- Parts
- Warranty
- Language Translation Pages

JU6H-UFADS0

Engines >> UL/FM >> JU6H-UFAD Low Speed Series

SPECIFICATIONS

Number of Cylinders	6
Aspiration	TRWA
Rotation*	Clockwise (CW)
Weight - lb(kg)	1747 (791)
Compression Ratio	17.0:1
Displacement - cu. in. (l)	415 (6.8)
Engine Type	4 Stroke Cycle - Inline Construction
Bore & Stroke - in.(mm)	4.19 x 5.00 (106 x 127)
Engine Series	John Deere 6068 Series Power Tech Plus
Emissions	Tier 3 Certified

Abbreviations: CW – Clockwise; NA – Naturally Aspirated; T – Turbocharged; TRWA - Turbocharged with Raw Water Aftercooling
**Rotation viewed from Heat Exchanger / Front of engine*
Engine intended for Indoor use or inside weatherproof enclosure only

© 2015 Clarke - All rights reserved.

Rating Specific Emissions Data - John Deere Power Systems

JOHN DEERE

Nameplate Rating Information

Clarke Model	JU6H-UFADS0
Power Rating (BHP / kW)	260 / 194
Certified Speed (RPM)	2100

Rating Data

Rating	6068HFC48B	
Certified Power (kW)	236	
Rated Speed	2400	
Vehicle Model Number	Clarke Fire Pump	
Units	g/kW-hr	g/hp-hr
NOx	3.43	2.56
HC	0.09	0.07
NOx + HC	N/A	N/A
Pm	0.11	0.08
CO	0.8	0.6

Certificate Data

Engine Model Year	2016
EPA Family Name	GJDXL13.5103
EPA JD Name	650HAA
EPA Certificate Number	GJDXL13.5103-008
CARB Executive Order	Not Applicable
Parent of Family	6135HF485A
Units	g/kW-hr
NOx	3.31
HC	0.11
NOx + HC	N/A
Pm	0.10
CO	0.6

* The emission data listed is measured from a laboratory test engine according to the test procedures of 40 CFR 89 or 40 CFR 1039, as applicable. The test engine is intended to represent nominal production hardware, and we do not guarantee that every production engine will have identical test results. The family parent data represents multiple ratings and this data may have been collected at a different engine speed and load. Emission results may vary due to engine manufacturing tolerances, engine operating conditions, fuels used, or other conditions beyond our control.

This information is property of Deere & Company. It is provided solely for the purpose of obtaining certification or permits of Deere powered equipment. Unauthorized distribution of this information is prohibited

	UNITED STATES ENVIRONMENTAL PROTECTION AGENCY **2016 MODEL YEAR** **CERTIFICATE OF CONFORMITY** **WITH THE CLEAN AIR ACT**	**OFFICE OF TRANSPORTATION** **AND AIR QUALITY** **ANN ARBOR, MICHIGAN 48105**

Certificate Issued To: Deere & Company (U.S. Manufacturer or Importer) **Certificate Number: GJDXL13.5103-008**	**Effective Date:** **07/24/2015** **Expiration Date:** **12/31/2016**	**Byron J. Bunker, Division Director** **Compliance Division**	**Issue Date:** **07/24/2015** **Revision Date:** **N/A**

Model Year: 2016 **Manufacturer Type:** Original Engine Manufacturer **Engine Family:** GJDXL13.5103	**Mobile/Stationary Indicator:** Stationary **Emissions Power Category:** 225<=kW<450 **Fuel Type:** Diesel **After Treatment Devices:** No After Treatment Devices Installed **Non-after Treatment Devices:** Electronic Control, Smoke Puff Limiter, Electronic/Electric EGR - Cooled, Engine Design Modification, Non-standard Non-After Treatment Device Installed

Pursuant to Section 111 and Section 213 of the Clean Air Act (42 U.S.C. sections 7411 and 7547) and 40 CFR Part 60, and subject to the terms and conditions prescribed in those provisions, this certificate of conformity is hereby issued with respect to the test engines which have been found to conform to applicable requirements and which represent the following engines, by engine family, more fully described in the documentation required by 40 CFR Part 60 and produced in the stated model year.

This certificate of conformity covers only those new compression-ignition engines which conform in all material respects to the design specifications that applied to those engines described in the documentation required by 40 CFR Part 60 and which are produced during the model year stated on this certificate of the said manufacturer, as defined in 40 CFR Part 60.

It is a term of this certificate that the manufacturer shall consent to all inspections described in 40 CFR 1068 and authorized in a warrant or court order. Failure to comply with the requirements of such a warrant or court order may lead to revocation or suspension of this certificate for reasons specified in 40 CFR Part 60. It is also a term of this certificate that this certificate may be revoked or suspended or rendered void *ab initio* for other reasons specified in 40 CFR Part 60.

This certificate does not cover engines sold, offered for sale, or introduced, or delivered for introduction, into commerce in the U.S. prior to the effective date of the certificate.

The actual engine power may lie outside the limits of the Emissions Power Category shown above. See the certificate application for details.

NISSAN NORTH AMERICA, INC.
983 Nissan Drive
Smyrna, TN 37167
Tel: 615-459-1400

July 15, 2016

Title V Minor Permit Modification

Re: Permit #568333
Addition of a 300 KW Emergency Generator

Submitted Electronically

To: Ms. Michelle Walker Owenby, Technical Secretary
Tennessee Dept. of Environment and Conservation
Division of Air Pollution Control
William R. Snodgrass Tennessee Tower
312 Rosa L. Parks Avenue, 15th Floor
Nashville, Tennessee 37243

The Nissan North America, Inc.'s Smyrna, Tennessee Facility (Nissan) plans to make the following change(s) pursuant to TAPCR 1200-3-9-.02(11)(f)5.(ii).

Brief Description of the Change

A Developer is developing a site on Sam Griffin Road, in Smyrna, Tennessee. The Sam Griffin Road site is connected to the main Nissan Facility. The developer is constructing the Integrated Logistics Center (ILC), a 1.5 million square foot warehouse to prepare parts for delivery to the assembly line. One million square feet will be used as the ILC and 0.5 million square feet will be occupied by suppliers to support Nissan manufacturing. A new 480 Hp emergency diesel generator engine will be installed as part of an emergency power for the ILC. The purpose of this Minor Modification is to include the new ILC Generator in the Title V permit.

Emissions Resulting from the Change

The resulting increases in emissions from this change are not significant. The potential emissions for the Generator Engine are based on 500 hours of operation per year. Emissions calculations are provide in Attachment 2.

Any new applicable requirements that will apply when the change occurs

The ILC Generator Engine is a new source for the Title V permit. The new emergency generator engine is subject to the NESHAP 40 CFR 63 Subpart ZZZZZ for Reciprocating Internal Combustion Engines and the NSPS 40 CFR 60 Subpart IIII for Stationary Compression Ignition Internal Combustion Engines. However, these requirements are already included in the Title V permit for other sources.

This change does not exceed the allowable emission rate for VOC and PM and does not constitute a Title I modification. This change does not violate applicable requirements or contravene federally enforceable permit terms and conditions that are monitoring, recordkeeping, reporting, or compliance certification requirements.

Attachment 1 contains a proposed list of permit conditions for this project. Attachment 2 contains the certification of Truth, Accuracy & Completeness by the responsible official. This attachment also contains the Title V application forms for this project. Attachment 3 contains technical specification sheets for the engine.

Sincerely,

John Harris, Director
Facilities, Environmental, and Systems Engineering

cc: Bill McCabe (TDEC, Nashville EFO) - **Submitted Electronically**

Attachment 1

Proposed Title V Permit Language

75-0155-XX	Diesel-Fired 480 BHP Emergency Reciprocating Internal Combustion Engine with a 300 kW Generator for Integrated Logistics Center (ILC) NSPS (Subpart IIII), NESHAP (Subpart ZZZZ)
Conditions EXX-1 through EXX-19 apply to source 75-0155-XX.	

EXX-1. This source is subject to the Standards of Performance for Stationary Compression Ignition Internal Combustion Engines (40 CFR Part 60, Subpart IIII). The permittee shall comply with 40 CFR Part 60, Subpart IIII upon startup.

EXX-2. This source is subject to the National Emission Standards for Hazardous Air Pollutants for Stationary Reciprocating Internal Combustion Engines (40 CFR Part 63, Subpart ZZZZ). The permittee shall comply with 40 CFR Part 63, Subpart ZZZZ upon startup.

EXX-3. The maximum power output for this engine shall not exceed 300 kilowatts (300 KW).

EXX-4. Only No. 2 fuel oil and diesel fuel shall be used as fuels for this source.

EXX-5. Particulate Matter (TSP) emitted from this source (75-0155-XX) shall not exceed 0.20 grams per kilowatt-hour (0.13 lb/hr).

40 CFR 60.4202(a)(2); 40 CFR §60.4205(b); and Table 1 of 40 CFR 89.112(a)

Compliance Method: The permittee shall assure compliance with this emission limitation by assuring compliance with **Conditions EXX-3, EXX-10, EXX-13, EXX-14, and EXX-17.**

EXX-6. Sulfur Dioxide (SO_2) emitted from this source (75-0155-XX) shall not exceed 0.99 pounds per hour.

TAPCR 1200-03-14-.03(5)

Compliance Method: The permittee shall assure compliance with this emission limitation by assuring compliance with **Conditions EXX-3, EXX-4, and EXX-11(1).** Compliance with this emission limitation is based on an emission factor of 0.00205 pounds of SO_2 per horsepower-hour (EPA AP-42, Section 3.3, October 1996).

EXX-7. Non-Methane Hydrocarbons and Nitrogen Oxides (NMHC + NO_X) emitted from this source (75-0155-XX) shall not exceed 4.0 grams per kilowatt-hour (2.65 lb/hr).

40 CFR 60.4202(a)(2); 40 CFR §60.4205(b); and Table 1 of 40 CFR 89.112(a)

Compliance Method: The permittee shall assure compliance with this emission limitation by assuring compliance with **Conditions EXX-3, EXX-10, EXX-13, EXX-14, and EXX-17.**

EXX-8. Carbon monoxide (CO) emitted from this source (75-0155-XX) shall not exceed 3.5 grams per kilowatt-hour (2.32 lb/hr).

40 CFR 60.4202(a)(2); 40 CFR §60.4205(b); and Table 1 of 40 CFR 89.112(a)

Compliance Method: The permittee shall assure compliance with this emission limitation by assuring compliance with **Conditions EXX-3, EXX-10, EXX-13, EXX-14, and EXX-17.**

EXX-9. Visible emissions from this source (75-0155-XX) shall not exceed the following:
a) Twenty percent (20%) opacity during the acceleration mode;
b) Fifteen percent (15%) opacity during the lugging mode; and
c) Fifty percent (50%) opacity during the peaks in either the acceleration or lugging modes.

The engine manufacturer is responsible for providing an engine that is compliant with these emission limitations.

40 CFR §60.4205(b); 40 CFR §60.4202(a)(2); and 40 CFR §89.113(a) and (b)

EXX-10. Pursuant to 40 CFR §60.4206, owners and operators of stationary CI ICE must operate and maintain stationary CI ICE that achieve the emission standards as required in 40 CFR §60.4205 over the entire life of the engine.

EXX-11. Pursuant to 40 CFR §60.4207(b), beginning October 1, 2010, the permittee shall use diesel fuel that meets the requirements of 40 CFR 80.510(b), as follows:
(1) Sulfur content shall not exceed 15 ppm maximum for nonroad diesel fuel.
(2) Cetane index or aromatic content, as follows:
  (i) A minimum cetane index of 40; or

(ii) A maximum aromatic content of 35 volume percent.

EXX-12. Pursuant to 40 CFR §60.4209(a), for each emergency stationary CI internal combustion engine that does not meet the standards applicable to non-emergency engines, the permittee must install a non-resettable hour meter prior to startup of the engine.

EXX-13. Pursuant to 40 CFR §60.4211(a), the permittee must do all of the following, except as permitted under paragraph (4) of this condition:

(1) Operate and maintain the stationary CI internal combustion engine and control device according to the manufacturer's emission-related written instructions;

(2) Change only those emission related settings that are permitted by the manufacturer; and

(3) Meet the requirements of 40 CFR parts 89, 94 and/or 1068, as they apply to you.

(4) If the permittee does not install, configure, operate, and maintain the engine and control device according to the manufacturer's emission-related written instructions, or the permittee changes emission related settings in a way that is not permitted by the manufacturer, the permittee must keep a maintenance plan and records of conducted maintenance and must, to the extent practicable, maintain and operate the engine in a manner consistent with good air pollution control practice for minimizing emissions. In addition, the permittee must conduct an initial performance test to demonstrate compliance with the applicable emission standards within 1 year of startup, or within 1 year after an engine and control device is no longer installed, configured, operated, and maintained in accordance with the manufacturer's emission-related written instructions, or within 1 year after you change emission-related settings in a way that is not permitted by the manufacturer. The permittee must conduct subsequent performance testing every 8,760 hours of engine operation or 3 years, whichever comes first, thereafter to demonstrate compliance with the applicable emission standards.

EXX-14. The permittee shall comply with the PM and (NMHC + NOx) emission limitations by purchasing an engine certified to the emission standards in 40 CFR §60.4205(b) based on the model year and maximum engine power. The permittee shall maintain a record of this certification. The engine shall be installed and configured according to the manufacturer's emission-related specifications, except as permitted in paragraph (4) of **Condition EXX-13** of this permit. 40 CFR §60.4211(c)

EXX-15. Pursuant to 40 CFR §63.6605, the permittee must be in compliance with the emission limitations and operating limitations in 40 CFR 63, subpart ZZZZ that apply to the permittee at all times. At all times the permittee must operate and maintain any affected source, including associated air pollution control equipment and monitoring equipment, in a manner consistent with safety and good air pollution control practices for minimizing emissions. The general duty to minimize emissions does not require the permittee to make any further efforts to reduce emissions if levels required by this standard have been achieved. Determination of whether such operation and maintenance procedures are being used will be based on information available to the Technical Secretary which may include, but is not limited to, monitoring results, review of operation and maintenance procedures, review of operation and maintenance records, and inspection of the source.

EXX-16. Pursuant to 40 CFR 63.6645(e), the permittee must submit an Initial Notification not later than 120 days after the permittee becomes subject to 40 CFR 63, subpart ZZZZ (upon engine startup).

EXX-17. The permittee must keep monthly records of the hours of operation of the engine that are recorded through the non-resettable hour meter. The permittee shall calculate the operating hours during the calendar year. The permittee shall maintain the following log format or an alternative format which readily provides the same required information.

Logs for each emergency stationary RICE

Month, Year	Emergency Operation (hr/month)	Emergency Operation (hr/year)	Maintenance Checks and Readiness Testing (hr/mon)	Maintenance Checks and Readiness Testing (hr/calendar year)	Non-Emergency Operation (hr/mon)	Non-Emergency Operation (hr/calendar year)
				Column A		Column B
January						
February						
Etc.						
December						

EXX-18. Pursuant to 40 CFR §60.4211(f), there is no time limit on the use of emergency stationary ICE in emergency situations.

EXX-19. For fee purposes, the permittee shall calculate emissions of particulate matter (PM), sulfur dioxide (SO_2), non-methane hydrocarbons and nitrogen oxides (NMHC + NO_X). The permittee shall utilize the emission factors listed in the table below. The permittee shall utilize the hours of operation from **Condition EXX-17**. The permittee shall maintain the following log format or an alternative format which readily provides the same required information.

Emission from July 1 to June 30 (Fee Accounting Period)

Pollutant	Emission Factors	Emission Factors Source	Hours of Operation (hr/yr)	Emissions (ton/yr)
PM	0.20 grams PM/kw-hr	NSPS standard		
SO_2	0.00205 lb SO2/hp-hr	AP-42, Section 3.3		
NMHC + NOx	4.0 grams NOx/kw-hr	NSPS standard		

Attachment 2

Statement of Truth, Accuracy & Completeness Certification
& APC Title V Application Forms

State of Tennessee
Department of Environment and Conservation
Division of Air Pollution Control
William R. Snodgrass Tennessee Tower
312 Rosa L. Parks Avenue, 15th Floor
Nashville, TN 37243
Telephone: (615) 532-0554

TITLE V PERMIT APPLICATION
INDEX OF AIR POLLUTION PERMIT APPLICATION FORMS

Section 1: Identification and Diagrams		
This application contains the following forms:	APC Form 1, Facility Identification	1
	APC Form 2, Operations and Flow Diagrams	1

Section 2: Emission Source Description Forms		
		Total number of this form
This application contains the following forms (one form for each incinerator, printing operation, fuel burning installation, etc.):	APC Form 3, Stack Identification	1
	APC Form 4, Fuel Burning Non-Process Equipment	
	APC Form 5, Stationary Gas Turbines or Internal Combustion Engines	1
	APC Form 6, Storage Tanks	
	APC Form 7, Incinerators	
	APC Form 8, Printing Operations	
	APC Form 9, Painting and Coating Operations	
	APC Form 10, Miscellaneous Processes	
	APC Form 33, Stage I and Stage II Vapor Recovery Equipment	
	APC Form 34, Open Burning	

Section 3: Air Pollution Control System Forms		
		Total number of this form
This application contains the following forms (one form for each control system in use at the facility):	APC Form 11, Control Equipment - Miscellaneous	
	APC Form 13, Adsorbers	
	APC Form 14, Catalytic or Thermal Oxidation Equipment	
	APC Form 15, Cyclones/Settling Chambers	
	APC Form 17, Wet Collection Systems	
	APC Form 18, Baghouse/Fabric Filters	

(OVER)

Section 4: Compliance Demonstration Forms

		Total number of this form
This application contains the following forms (one form for each incinerator, printing operation, fuel burning installation, etc.):	APC Form 19, Compliance Certification - Monitoring and Reporting - Description of Methods for Determining Compliance	1
	APC Form 20, Continuous Emissions Monitoring	
	APC Form 21, Portable Monitors	
	APC Form 22, Control System Parameters or Operating Parameters of a Process	
	APC Form 23, Monitoring Maintenance Procedures	
	APC Form 24, Stack Testing	
	APC Form 25, Fuel Sampling and Analysis	
	APC Form 26, Record Keeping	1
	APC Form 27, Other Methods	
	APC Form 28, Emissions from Process Emissions Sources / Fuel Burning Installations / Incinerators	1
	APC Form 29, Emissions Summary for the Facility or for the Source Contained in This Application	1
	APC Form 30, Current Emissions Requirements and Status	1
	APC Form 31, Compliance Plan and Compliance Certification	
	APC Form 32, Air Monitoring Network	

Section 5: Statement of Completeness and Certification of Compliance

I have reviewed this application in its entirety and to the best of my knowledge, and based on information and belief formed after reasonable inquiry, the statements and information contained in this application are true, accurate, and complete. I have provided all the information that is necessary for compliance purposes and this application consists of 25 pages and they are numbered from page Index 1 to 37-9. The status of this facility's compliance with all applicable air pollution control requirements, including the enhanced monitoring and compliance certification requirements of the Federal Clean Air Act, is reported in this application along with the methods to be used for compliance demonstration.

Name and Title of Responsible Official	Telephone Number with Area Code
John Harris, Director Facilities, Environmental and Systems Engineering	(615) 459-1400
Signature of Responsible Official	**Date of Application**
	7/14/16

(For definition of responsible official, see instructions for APC Form 1)

State of Tennessee
Department of Environment and Conservation
Division of Air Pollution Control
William R. Snodgrass Tennessee Tower
312 Rosa L. Parks Avenue, 15th Floor
Nashville, TN 37243
Telephone: (615) 532-0554

TITLE V PERMIT APPLICATION
FACILITY IDENTIFICATION

SITE INFORMATION				
1. Organization's legal name Nissan North America, Inc. - Smyrna			For APC Use Only	APC company point no.
2. Site name (if different from legal name)				APC Log/Permit no.
3. Site address (St./Rd./Hwy.) 983 Nissan Drive			NAICS or SIC Code NAICS Code 33611	
City or distance to nearest town Smyrna		Zip code 37167	County name Rutherford	
4. Site location (in Lat./Long)	Latitude UTM Vert. 3979390mN		Longitude UTM Horiz. 545540mE	
CONTACT INFORMATION (RESPONSIBLE OFFICIAL)				
5. Responsible official contact John Harris			Phone number with area code (615) 459-1400	
6. Mailing address (St./Rd./Hwy.) 983 Nissan Drive Bin 26D			Fax number with area code	
City Smyrna	State TN	Zip code 37167	Email address john.harris@nissan-usa.com	
CONTACT INFORMATION (TECHNICAL)				
7. Principal technical contact Mike Haverstick			Phone number with area code (615) 223-3902	
8. Mailing address (St./Rd./Hwy.) 983 Nissan Drive Bin 26D			Fax number with area code	
City Smyrna	State TN	Zip code 37167	Email address mike.haverstick@nissan-usa.com	
CONTACT INFORMATION (BILLING)				
11. Billing contact Mike Haverstick			Phone number with area code (615) 223-3902	
12. Mailing address (St./Rd./Hwy.) 983 Nissan Drive Bin 26D			Fax number with area code	
City Smyrna	State TN	Zip code 37167	Email address mike.haverstick@nissan-usa.com	

TYPE OF PERMIT REQUESTED

13. Permit requested for:

Initial application to operate:		Minor permit modification:	✓
Permit renewal to operate:		Significant modification:	
Administrative permit amendment:		Construction permit:	

(OVER)

HAZARDOUS AIR POLLUTANTS, DESIGNATIONS, AND OTHER PERMITS ASSOCIATED WITH FACILITY

14. Is this facility subject to the provisions governing prevention of accidental releases of hazardous air contaminants contained in Chapter 1200-03-32 of the Tennessee Air Pollution Control regulations?

☐ Yes ☑ No

If the answer is Yes, are you in compliance with the provisions of Chapter 1200-03-32 of the Tennessee Air Pollution Control regulations?

☐ Yes ☐ No

15. If facility is located in an area designated as "Non-Attainment" or "Additional Control", indicate the pollutant(s) for the designation.

NA

16. List all valid Air Pollution permits issued to the sources contained in this application [identify all permits with most recent permit numbers and emission source reference numbers listed on the permit(s)].

Title V Permit Number: 568333, Significant Modification #1, Issued January 13, 2016
Significant Modification #3, PL2 Prime Combination of Limits, submitted June 17, 2016
Minor Modification #6, ILC Fire Pump, submitted June 17, 2016

Nissan is requesting a Minor Modification to install Emergency Diesel Generator at the new Integrated Logistics Center (ILC) on Sam Griffin Road. The new engine will be subject to the NESHAP 40 CFR Part 63 Subpart ZZZZ and the NSPS 40 CFR Part 60 Subpart IIII.

17.

Page number:	Revision number:	Date of revision:
Page Number 2-2	Minor Modification #7	July 2016

Table 2-1: Attachment to Ballot to Declare Major Source Fee Choice
Facility Name: Nissan North America, Inc. - Smyrna
File Number: 75-0155

Mixed Actual and Allowable Based Fee Table

Emission Source Description	ESRN	Title V Condition	PM	VOC	NOx	SO2	Non-VOC HAP
Paint Line 1 Body & Frame Pretreat Systems	75-0155-90	E11	NA	**Actual**	NA	NA	NA
Paint Line 1 Frame E-Coat Line	75-0155-07	E12	NA	**Actual**	NA	NA	NA
Paint Line 2 Pretreatment Line	75-0155-89	E21	NA	**Actual**	NA	NA	NA
Paint Line 2 Body E-Coat Line	75-0155-71	E22	NA	**Actual**	NA	NA	NA
Paint Line 2 Stoneguard and Cavity Wax Coating Line	75-0155-68	E23	Allowable	**Actual**	NA	NA	NA
Paint Line 2 Primer Coating Line	75-0155-66	E24	Allowable	**Actual**	NA	NA	NA
Paint Line 2 Topcoat Lines and Touch Up Operations	75-0155-64	E25	Allowable	**Actual**	NA	NA	NA
Paint Line 2 Cavity Wax Booth	75-0155-70	E26	Allowable	**Actual**	NA	NA	NA
Paint Line 2 Undercoat Booth	75-0155-25	E27	Allowable	**Actual**	NA	NA	NA
Fascia Paint Line 2 Plastics Coating Lines	75-0155-62	E32	Allowable	**Actual**	NA	NA	NA
Paint Line 1	75-0155-51	E35	Allowable	**Actual**	NA	NA	NA
Electrolyte Filling and Degassing	75-0155-33	E43	Allowable	**Actual**	NA	NA	NA
Service Parts E-Coat Line	75-0155-72	E41	Allowable	**Actual**	NA	NA	NA
Two Diesel-Fired Emergency RICE Generators	75-0155-37	E44	**Actual**	**Actual**	**Actual**	**Actual**	NA
Battery Sealers and Adhesives	75-0155-39	E45	NA	**Actual**	NA	NA	NA
Miscellaneous Solvent Usage	75-0155-22	E51	NA	**Actual**	NA	NA	NA
Miscellaneous Sealer and Adhesives	75-0155-78	E52	NA	**Actual**	NA	NA	NA
Three Natural Gas Fired Boilers	75-0155-01	E61	**Actual**	**Actual**	**Actual**	**Actual**	NA
Natural Gas Fuel Burning Facility Wide	75-0155-65	E62	**Actual**	**Actual**	**Actual**	**Actual**	NA
Paint Strip House	75-0155-61	E64	Allowable	**Actual**	NA	NA	NA
Frame Welding Process	75-0155-95	E65	Allowable	NA	NA	NA	NA
WWL Preparation Platforms (4) and Spray Booths with Ovens (2)	75-0155-26	E66	Allowable	**Actual**	NA	NA	NA
Facility Wide Gasoline Dispensing	75-0155-83	E67	NA	Allowable	NA	NA	NA
Shot Blasting Operation	75-0155-97	E68	Allowable	NA	NA	NA	NA
Windshield Washer Fluid Operations	75-0155-80	E70	NA	Allowable	NA	NA	NA
Natural Gas Fuel Burning Paint Line 1 and Fascia Paint Line 1 Paint Plants	75-0155-52	E71	**Actual**	**Actual**	**Actual**	**Actual**	NA
Paint Line 1 Natural Gas Generator	75-0155-28	E73	**Actual**	**Actual**	**Actual**	**Actual**	NA
Existing Emergency RICE Engines	75-0155-57	E75	**Actual**	**Actual**	**Actual**	**Actual**	NA
Natural Gas Fuel Burning Battery Assembly Plant	75-0155-56	E46	**Actual**	**Actual**	**Actual**	**Actual**	NA
Shot Blaster for Paint Line 1 with Dust Collector Control	75-0155-54	E69	Allowable	NA	NA	NA	NA
Fascia Paint Line 1 Plastics Parts Coating Line and Touch Up Operations	75-0155-53	E31	Allowable	**Actual**	NA	NA	NA
Two Emergency Diesel-Fired Reciprocation Internal Combustion Engines with Generators at Battery Plant	75-0155-55	E47	**Actual**	**Actual**	**Actual**	**Actual**	NA
ILC Emergency Diesel-Fired Fire Pump	75-0155-103	TBD	**Actual**	**Actual**	**Actual**	**Actual**	NA
ILC Emergency Diesel-Fired Generator	75-0155-XX	TBD	**Actual**	**Actual**	**Actual**	**Actual**	NA

NA - Not Applicable, pollutant not emitted from source

Allowable - Nissan has chosen to base emission fees on allowable emissions

Actual - Nissan has chosen to base emission fees on actual emissions

*** Natural Gas Emissions are based on Total Natural Gas used at the facility. Significant and Insignificant emission sources are included in the emission calculations.**

State of Tennessee
Department of Environment and Conservation
Division of Air Pollution Control
William R. Snodgrass Tennessee Tower
312 Rosa L. Parks Avenue, 15th Floor
Nashville, TN 37243
Telephone: (615) 532-0554

TITLE V PERMIT APPLICATION
OPERATIONS AND FLOW DIAGRAMS

1. Please list, identify, and describe briefly process emission sources, fuel burning installations, and incinerators that are contained in this application. Please attach a flow diagram for this application.

ILC Generator, adding a 300KW (480 HP) diesel fired emergency engine to provide emergency power

2. List all insignificant activities which are exempted because of size or production rate and cite the applicable regulations.

See Updated Attachment 1 to APC 2, Table 2-2 Trivial, Categorically Exempt and Insignificant Activities

3. Are there any storage piles?

YES _____ NO X

4. List the states that are within 50 miles of your facility.

None

5. Page number: 2-4 Revision Number: Minor Modification #7 Date of Revision: July 2016

DESCRIPTION	COMMENTS
Blanking Lines	1200-3-9-.04(5)(f)54. Equipment used exclusively for ... pressing, stamping, ... metals.
Stamping Press Lines	1200-3-9-.04(5)(f)54. Equipment used exclusively for ... pressing, stamping, ... metals.
Die Clean Booths	1200-3-9-.04(5)(a)4.(i) ... potential to emit <5 tons/yr of any regulated air pollutant ... or <1,000 lbs/yr of any HAP.
Stamping Laser Welding	1200-3-9-.04(5)(a)4.(i) ... potential to emit <5 tons/yr of any regulated air pollutant ... or <1,000 lbs/yr of any HAP.
Stamping and Body Shop Quality Assurance Testing	1200-3-9-.04(5)(a)4.(i) ... potential to emit <5 tons/yr of any regulated air pollutant ... or <1,000 lbs/yr of any HAP.
Body Laser Welding	1200-3-9-.04(5)(a)4.(i) ... potential to emit <5 tons/yr of any regulated air pollutant ... or <1,000 lbs/yr of any HAP.
Body Welding	1200-3-9-.04(5)(a)4.(i) ... potential to emit <5 tons/yr of any regulated air pollutant ... or <1,000 lbs/yr of any HAP.
Battery Case Welding Operation	1200-3-9-.04(5)(a)4.(i) ... potential to emit <5 tons/yr of any regulated air pollutant ... or <1,000 lbs/yr of any HAP.
Battery Charging Areas	1200-3-9-.04(5)(g)19. Batteries and battery charging stations, except at battery manufacturing plants.
Body Shop Layout Lab	1200-3-9-.04(5)(f)20. Equipment used for inspection of metal products.
Testing Lab	1200-3-9-.04(5)(f)19. Laboratory equipment…used for chemical and physical analysis....including ventilating and exhaust systems for laboratory hoods…
Zinc Digestion	1200-3-9-.04(5)(f)19. Laboratory equipment…used for chemical and physical analysis....including ventilating and exhaust systems for laboratory hoods…
Aluminum Scrap Shredder	1200-3-9-.04(5)(f)95. Equipment used to process or handle solid materials or solid wastes such as bottle smashers, bulb crushers, balers, compactors, and can punctures.
Paint Line 1 Paint Plant Cooling Tower	1200-3-9-.04(5)(f)15 water cooling towers…potential to emit <5 tons/yr of any regulated air pollutant ... or <1,000 lbs/yr of any HAP.
Paint Line 1 Metal Repair/Offline Booth	1200-3-9-.04(5)(a)4.(i) ... potential to emit <5 tons/yr of any regulated air pollutant ... or <1,000 lbs/yr of any HAP.
Paint Line 1 Cleaning Booth and Body Cavities	1200-3-9-.04(5)(f)18. Blast cleaning equipment ....

DESCRIPTION	COMMENTS
Paint Line 1 Acid Cleaning	1200-3-9-.04(5)(a)4.(i) ... potential to emit <5 tons/yr of any regulated air pollutant ... or <1,000 lbs/yr of any HAP.
Paint Line 1 Reverse Osmosis System	1200-3-9-.04(5)(a)4.(i) ... potential to emit <5 tons/yr of any regulated air pollutant ... or <1,000 lbs/yr of any HAP.
Paint Line 1 Phosphate Laboratory	1200-3-9-.04(5)(f)19. Laboratory equipment…used for chemical and physical analysis....including ventilating and exhaust systems for laboratory hoods…
Paint Line 1 Mix Room Fume Hood	1200-3-9-.04(5)(a)4.(i) ... potential to emit <5 tons/yr of any regulated air pollutant ... or <1,000 lbs/yr of any HAP.
Paint Line 1 Waste Solvent Tank	1200-3-9-.04(5)(a)4.(i) ... potential to emit <5 tons/yr of any regulated air pollutant ... or <1,000 lbs/yr of any HAP.
Paint Line 2 Damp Sand #4	1200-3-9-.04(5)(a)4.(i) ... potential to emit <5 tons/yr of any regulated air pollutant ... or <1,000 lbs/yr of any HAP.
Paint Line 2 Damp Sand #5	1200-3-9-.04(5)(a)4.(i) ... potential to emit <5 tons/yr of any regulated air pollutant ... or <1,000 lbs/yr of any HAP.
Paint Line 2 Damp Sand #6	1200-3-9-.04(5)(a)4.(i) ... potential to emit <5 tons/yr of any regulated air pollutant ... or <1,000 lbs/yr of any HAP.
Paint Line 2 Tutone Sand Booth	1200-3-9-.04(5)(a)4.(i) ... potential to emit <5 tons/yr of any regulated air pollutant ... or <1,000 lbs/yr of any HAP.
Paint Line 2 Major Metal Repair Booth	1200-3-9-.04(5)(a)4.(i) ... potential to emit <5 tons/yr of any regulated air pollutant ... or <1,000 lbs/yr of any HAP.
Paint Line 2 Carrier Cleaner	1200-3-9-.04(5)(f)18. Blast cleaning equipment ....
Paint Line 2 Acid Cleaning System	1200-3-9-.04(5)(a)4.(i) ... potential to emit <5 tons/yr of any regulated air pollutant ... or <1,000 lbs/yr of any HAP.
Paint Line 2 Reverse Osmosis System	1200-3-9-.04(5)(a)4.(i) ... potential to emit <5 tons/yr of any regulated air pollutant ... or <1,000 lbs/yr of any HAP.
Paint Line 2 Phosphate Laboratory	1200-3-9-.04(5)(f)19. Laboratory equipment…used for chemical and physical analysis....including ventilating and exhaust systems for laboratory hoods…

DESCRIPTION	COMMENTS
Paint Line 2 Mix Room Fume Hood	1200-3-9-.04(5)(f)19. Laboratory equipment, ... including ventilating and exhaust systems for laboratory hoods .... Emissions from the System 2 Mix Room are included in the System 2 Paint Plant surface coating emission units.
Component Assembly Lines	1200-3-9-.04(5)(a)4.(i) ... potential to emit <5 tons/yr of any regulated air pollutant ... or <1,000 lbs/yr of any HAP.
Engine Assembly Lines	1200-3-9-.04(5)(a)4.(i) ... potential to emit <5 tons/yr of any regulated air pollutant ... or <1,000 lbs/yr of any HAP.
Component Assembly Rear Axle Welding	1200-3-9-.04(5)(a)4.(i) ... potential to emit <5 tons/yr of any regulated air pollutant ... or <1,000 lbs/yr of any HAP.
Plastics Plant Fascia Molding	1200-3-9-.04(5)(f)24. Equipment used for compression molding ... of plastics ……...
Plastics Plant Extruder in the Repelletizing Operation Area	1200-3-9-.04(5)(f)51. Equipment used exclusively for rolling, forging, pressing, stamping, spinning, or extruding either hot or cold plastics provided hazardous air pollutants are not emitted.
Fascia Paint Line 2 Plastics Pretreatment Line	1200-3-9-.04(5)(a)4.(i) ... potential to emit <5 tons/yr of any regulated air pollutant ... or <1,000 lbs/yr of any HAP.
Fascia Paint Line 2 Sludge Pits	1200-3-9-.04(5)(a)4.(i) ... potential to emit <5 tons/yr of any regulated air pollutant ... or <1,000 lbs/yr of any HAP.
Plastics Plant Gasoline Tank Assembly Line	1200-3-9-.04(5)(a)4.(i) ... potential to emit <5 tons/yr of any regulated air pollutant ... or <1,000 lbs/yr of any HAP.
Fascia Paint Line 2 Subassembly Line	1200-3-9-.04(5)(a)4.(i) ... potential to emit <5 tons/yr of any regulated air pollutant ... or <1,000 lbs/yr of any HAP.
Fascia Paint Line 2 Plastics Test Oven	1200-3-9-.04(5)(a)4.(i) ... potential to emit <5 tons/yr of any regulated air pollutant ... or <1,000 lbs/yr of any HAP.
Fascia Paint Line 2 Plant Mix Room Fume Hood	1200-3-9-.04(5)(f)19. Laboratory equipment, ... including ventilating and exhaust systems for laboratory hoods .... Emissions from the System 3 Plastics Plant Mix Room are included in the System 3 Plastics Plant surface coating emission units.
Fascia Paint Line 2 Deionized Water System	1200-3-9-.04(5)(a)4.(i) ... potential to emit <5 tons/yr of any regulated air pollutant ... or <1,000 lbs/yr of any HAP.
Fascia Paint Line 2 Carrier Cleaning	1200-3-9-.04(5)(f)18. Blast cleaning equipment ....

DESCRIPTION	COMMENTS
Trim & Chassis Miscellaneous Fluid Fill Operations (PSF, Brake Fluid, Coolant Fill, WWF)	1200-3-9-.04(5)(a)4.(i) ... potential to emit <5 tons/yr of any regulated air pollutant ... or <1,000 lbs/yr of any HAP.
Final Repair Spray Gun Cleaner	1200-3-9-.04(5)(a)4.(i) ... potential to emit <5 tons/yr of any regulated air pollutant ... or <1,000 lbs/yr of any HAP.
Vehicle Staging Area	1200-3-9-.04(5)(f)1. Mobile sources ....
Water Test Booths	1200-3-9-.04(5)(f)12. Washing of trucks and vehicles ....
Secondary Water Test Booth	1200-3-9-.04(5)(f)12. Washing of trucks and vehicles ....
Vehicle Storage Area	1200-3-9-.04(5)(f)1. Mobile sources ....
Miscellaneous Touch up Pens/Markers	1200-3-9-.04(5)(a)4.(i) ... potential to emit <5 tons/yr of any regulated air pollutant ... or <1,000 lbs/yr of any HAP.
Emissions Test Lab II - Chassis Dynamometer Test Area	1200-3-9-.04(5)(a)4.(i) ... potential to emit <5 tons/yr of any regulated air pollutant ... or <1,000 lbs/yr of any HAP.
Emissions Test Laboratory II – Gasoline defueling & dispensing for EPA Emissions Test	1200-3-18-.02(4). These regulations do not apply to any equipment used exclusively for … product quality and commercial acceptance…and…total actual emissions…do not exceed 450 lbs in any calendar month. 1200-3-9-.04(5)(a)4.(i) ... potential to emit <5 tons/yr of any regulated air pollutant ... or <1,000 lbs/yr of any HAP.
Service Parts Pretreatment Line	1200-3-9-.04(5)(a)4.(i) ... potential to emit <5 tons/yr of any regulated air pollutant ... or <1,000 lbs/yr of any HAP.
Service Parts Phosphate Lab	1200-3-9-.04(5)(f)19. Laboratory equipment…used for chemical and physical analysis....including ventilating and exhaust systems for laboratory hoods…
Service Parts Acid Cleaning System	1200-3-9-.04(5)(a)4.(i) ... potential to emit <5 tons/yr of any regulated air pollutant ... or <1,000 lbs/yr of any HAP.
Boiler Water Treatment	1200-3-9-.04(5)(f)15. Boiler water treatment operations.
Boiler House	1200-3-9-.04(5)(f)86. Industrial-Commercial-Institutional Steam Generating Facility…not subject to NSPS.
Boiler House Cooling Tower	1200-3-9-.04(5)(f)15 water cooling towers…potential to emit <5 tons/yr of any regulated air pollutant ... or <1,000 lbs/yr of any HAP.
Maintenance Paint Booth in Paint Strip House	1200-3-9-.04(5)(a)4.(i) ... potential to emit <5 tons/yr of any regulated air pollutant ... or <1,000 lbs/yr of any HAP.
Miscellaneous Cooling Towers	1200-3-9-.04(f)15. Water cooling towers...

DESCRIPTION	COMMENTS
Wastewater Treatment Plant	1200-3-9-.04(5)(a)4.(i) ... potential to emit <5 tons/yr of any regulated air pollutant ... or <1,000 lbs/yr of any HAP. Emissions from the Painting Process are included in S1, S2, and S3 surface coating emission units.
Plant-wide Small Maintenance Parts Washers	1200-3-9-.04(5)(f)76. Parts washer where the vapor pressure of cleaners is <1.52 psia. 1200-3-9-.04(4)(d)15,16,22. Degreasing operations… 1200-3-9-.04(5)(a)4.(i) ... potential to emit <5 tons/yr of any regulated air pollutant ... or <1,000 lbs/yr of any HAP.
Training Center Welding, 020100P (75-0155-43)	1200-3-9-.04(5)(a)4.(i) ... potential to emit <5 tons/yr of any regulated air pollutant ... or <1,000 lbs/yr of any HAP.
Training Center Mix Room Fume Hood	1200-3-9-.04(5)(f)19. Laboratory equipment, ... including ventilating and exhaust systems for laboratory hoods .... Emissions from the Training Center Mix Room are included in S1 Topcoat surface coating emission units.
Building Maintenance, Maintenance Activities, Miscellaneous Activities, Maintenance Coating Activities	1200-3-9-.04(5)(f)45. Maintenance activities…
FAB Quality Lab - General Operations including hood	1200-3-9-.04(5)(f)19. Laboratory equipment, ... including ventilating and exhaust systems for laboratory hoods ....
FAB Quality Lab - Plasma Frame Cutting Station including hood	1200-3-9-.04(5)(a)4.(i) ... potential to emit <5 tons/yr of any regulated air pollutant ... or <1,000 lbs/yr of any HAP. 1200-3-9-.04(5)(f)19. Laboratory equipment, ... including ventilating and exhaust systems for laboratory hoods ....
FQC Repair Shop Exhaust System	1200-3-9-.04(5)(a)4.(i) ... potential to emit <5 tons/yr of any regulated air pollutant ... or <1,000 lbs/yr of any HAP.
FQC Machine Shot Blaster	1200-3-9-.04(5)(a)4.(i) ... potential to emit <5 tons/yr of any regulated air pollutant ... or <1,000 lbs/yr of any HAP.
FQC Shop Welding	1200-3-9-.04(5)(f)21…portable, hand operated brazing, soldering, or welding equipment.
FQC Vehicle Repair	1200-3-9-.04(5)(f)45. Maintenance activities…
FQC Motorsports - Chassis Dynamometer Test Area	1200-3-9-.04(5)(a)4.(i) ... potential to emit <5 tons/yr of any regulated air pollutant ... or <1,000 lbs/yr of any HAP.

DESCRIPTION	COMMENTS
FQC Vehicle Exhaust	1200-3-9-.04(5)(a)4.(i) ... potential to emit <5 tons/yr of any regulated air pollutant ... or <1,000 lbs/yr of any HAP.
WWL Body Welding	1200-3-9-.04(5)(a)4.(i) ... potential to emit <5 tons/yr of any regulated air pollutant ... or <1,000 lbs/yr of any HAP.
WWL Spray Gun Cleaning	1200-3-9-.04(5)(a)4.(i) ... potential to emit <5 tons/yr of any regulated air pollutant ... or <1,000 lbs/yr of any HAP.
Propane Cylinder and Aerosol Can De-Pressurization	1200-3-9-.04(5)(a)4.(i) ... potential to emit <5 tons/yr of any regulated air pollutant ... or <1,000 lbs/yr of any HAP.
Plant-wide Storage Tanks (with the exception of all gasoline dispensing tanks and the Windshield Washer Fluid Operations tank)	1200-3-9-.04(5)(a)4.(i) ... potential to emit <5 tons/yr of any regulated air pollutant ... or <1,000 lbs/yr of any HAP.
Battery Assembly Cooling Towers	1200-3-9-.04(5)(f)15 water cooling towers…potential to emit <5 tons/yr of any regulated air pollutant ... or <1,000 lbs/yr of any HAP.
Battery Assembly Roll Slitting Operation	1200-3-9-.04(5)(a)4.(i) ... potential to emit <5 tons/yr of any regulated air pollutant ... or <1,000 lbs/yr of any HAP.
Battery Assembly Roll Drying Operation	1200-3-9-.04(5)(a)4.(i) ... potential to emit <5 tons/yr of any regulated air pollutant ... or <1,000 lbs/yr of any HAP.
Battery Assembly Stacking Operation	1200-3-9-.04(5)(a)4.(i) ... potential to emit <5 tons/yr of any regulated air pollutant ... or <1,000 lbs/yr of any HAP.
Battery Assembly Cell Soaking	1200-3-9-.04(5)(a)4.(i) ... potential to emit <5 tons/yr of any regulated air pollutant ... or <1,000 lbs/yr of any HAP.
Battery Assembly Cell Rolling	1200-3-9-.04(5)(a)4.(i) ... potential to emit <5 tons/yr of any regulated air pollutant ... or <1,000 lbs/yr of any HAP.
Battery Assembly Ink Jet Printing	1200-3-9-.04(5)(a)4.(i) ... potential to emit <5 tons/yr of any regulated air pollutant ... or <1,000 lbs/yr of any HAP.
Battery Assembly Laser Trimming	1200-3-9-.04(5)(a)4.(i) ... potential to emit <5 tons/yr of any regulated air pollutant ... or <1,000 lbs/yr of any HAP.
Battery Assembly Laser Scribing	1200-3-9-.04(5)(a)4.(i) ... potential to emit <5 tons/yr of any regulated air pollutant ... or <1,000 lbs/yr of any HAP.
Miscellaneous Battery Assembly Operations	1200-3-9-.04(5)(a)4.(i) ... potential to emit <5 tons/yr of any regulated air pollutant ... or <1,000 lbs/yr of any HAP.

DESCRIPTION	COMMENTS
Battery Assembly Quality Control Lab	1200-3-9-.04(5)(f)19. Laboratory equipment…used for chemical and physical analysis....including ventilating and exhaust systems for laboratory hoods…
Fascia Paint Line 1 Cleaning Booth	1200-3-9-.04(5)(f)18. Blast cleaning equipment ....
Fascia Paint Line 1 Sludge Pits	1200-3-9-.04(5)(a)4.(i) ... potential to emit <5 tons/yr of any regulated air pollutant ... or <1,000 lbs/yr of any HAP.
Fascia Paint Line 1 Acid Cleaning	1200-3-9-.04(5)(a)4.(i) ... potential to emit <5 tons/yr of any regulated air pollutant ... or <1,000 lbs/yr of any HAP.
Miscellaneous Metal Repairs, Sealers and Adhesives	1200-3-9-.04(5)(a)4.(i) ... potential to emit <5 tons/yr of any regulated air pollutant ... or <1,000 lbs/yr of any HAP.
Smyrna Supplier Park Cooling Tower	1200-3-9-.04(5)(a)4.(i) ... potential to emit <5 tons/yr of any regulated air pollutant ... or <1,000 lbs/yr of any HAP.
Smyrna Supplier Park Resistance Welding	1200-3-9-.04(5)(a)4.(i) ... potential to emit <5 tons/yr of any regulated air pollutant ... or <1,000 lbs/yr of any HAP.
Smyrna Supplier Park, Parts Welding	1200-3-9-.04(5)(a)4.(i) ... potential to emit <5 tons/yr of any regulated air pollutant ... or <1,000 lbs/yr of any HAP.
Battery Assembly Dispenser Rebuilding Hood	1200-3-9-.04(5)(a)4.(i) ... potential to emit <5 tons/yr of any regulated air pollutant ... or <1,000 lbs/yr of any HAP.
Laser Plastic Cutting Operations for FPL1 and FPL2	1200-3-9-.04(5)(a)4.(i) ... potential to emit <5 tons/yr of any regulated air pollutant ... or <1,000 lbs/yr of any HAP.
WWL fueling vehicles not equipped with OBVR	1200-3-9-.04(5)(a)4.(i) ... potential to emit <5 tons/yr of any regulated air pollutant ... or <1,000 lbs/yr of any HAP.
Final Line fueling vehicles not equipped with OBVR	1200-3-9-.04(5)(a)4.(i) ... potential to emit <5 tons/yr of any regulated air pollutant ... or <1,000 lbs/yr of any HAP.
NADIS Final Line Dyno	1200-3-9-.04(5)(a)4.(i) ... potential to emit <5 tons/yr of any regulated air pollutant ... or <1,000 lbs/yr of any HAP.

State of Tennessee
Department of Environment and Conservation
Division of Air Pollution Control
William R. Snodgrass Tennessee Tower
312 Rosa L. Parks Avenue, 15th Floor
Nashville, TN 37243
Telephone: (615) 532-0554

TITLE V PERMIT APPLICATION
EMISSION SUMMARY FOR THE FACILITY OR FOR THE SOURCES CONTAINED IN THIS APPLICATION

GENERAL IDENTIFICATION AND DESCRIPTION

1. Facility name: Nissan North America, Inc. - Smyrna

EMISSIONS SUMMARY TABLE – CRITERIA AND SELECTED POLLUTANTS

2. Complete the following emissions summary for regulated air pollutants at this facility or for the sources contained in this application.

Air Pollutant	Summary of Maximum Allowable Emissions		Summary of Actual Emissions	
	Tons per Year	Reserved for State use (Pounds per Hour- Item 4, APC 28)	Tons per Year	Reserved for State use (Pounds per Hour- Item 4, APC 28)
Particulate Matter (TSP)	132.21		NA	
Sulfur Dioxide	6.45		NA	
Volatile Organic Compounds	2920.27		NA	
Carbon Monoxide	233.25		NA	
Lead	NA		NA	
Nitrogen Oxides	256.90		NA	
Total Reduced Sulfur	NA		NA	
Mercury	NA		NA	
Asbestos	NA		NA	
Beryllium	NA		NA	
Vinyl Chlorides	NA		NA	
Fluorides	NA		NA	
Gaseous Fluorides	NA		NA	
Greenhouse Gases in CO_2 Equivalents	321,423.60		NA	

(Continued on next page)

(Continued from previous page)

EMISSIONS SUMMARY TABLE – HAZARDOUS AIR POLLUTANTS

3. Complete the following emissions summary for regulated air pollutants that are hazardous air pollutant(s) at this facility or for the sources contained in this application.

Air Pollutant & CAS	Summary of Maximum Allowable Emissions		Summary of Actual Emissions	
	Tons per Year	Reserved for State use (Pounds per Hour- Item 5, APC 28)	Tons per Year	Reserved for State use (Pounds per Hour- Item 5, APC 28)
PM HAPs	NA		NA	
Gaseous VOC HAPs	NA		NA	
Gaseous Non VOC HAPs	NA		NA	
Beryllium Compounds	NA		NA	
Hydrogen Chloride	NA		NA	
Hydrogen Fluoride	NA		NA	
Lead Compounds	NA		NA	

4. Page number: 2-13 Revision number: Minor Modification #7 Date of revision: July 2016

Attachment 1 Table 2-3 for APC V.29 ALLOWABLE EMISSIONS FOR THE NNA-S FACILITY

Emission Source Description	Plant Area	Title V Condition Number	Title V ESRN	Permit Number	PM (lb/hr)	PM (tpy)	VOC (lb/hr)	VOC (tpy)	CO (lb/hr)	CO (tpy)	CO2e (lb/hr)	CO2e (tpy)	(NMHC+)NOx (lb/hr)	(NMHC+)NOx (tpy)	SO2 (lb/hr)	SO2 (tpy)	Beryllium (tpy)	Non-VOC HAP (tpy)	Comments
Paint Line 1 Frame & Body Pretreat Systems	Paint Line 1	E11	75-0155-90	568333	-	-	-	10.00	-	-	-	-	-	-	-	-	-	-	
Paint Line 1 Frame E-Coat Line	Fascia Paint Line 1	E12	75-0155-07	568333	-	-	-	63.00	-	-	-	-	-	-	-	-	-	-	
Paint Line 2 Pretreatment Line	Paint Line 2	E21	75-0155-89	568333	-	-	-	9.53	-	-	-	-	-	-	-	-	-	-	
Paint Line 2 Body E-Coat Line	Paint Line 2	E22	75-0155-71	568333	-	-	-	79.2	-	-	-	-	-	-	-	-	-	-	
Paint Line 2 Stoneguard and Cavity Wax Coating Line	Paint Line 2	E23	75-0155-68	568333	0.02	0.04	-	44.0	-	-	-	-	-	-	-	-	-	-	
Paint Line 2 Primer Coating Line	Paint Line 2	E24	75-0155-66	568333	0.9	3.94	-	258.20	-	-	-	-	-	-	-	-	-	-	
Paint Line 2 Topcoat Lines and Touch Up Operations	Paint Line 2	E25	75-0155-64	568333	1.51	6.61	-	441.6	-	-	-	-	-	-	-	-	-	-	
Paint Line 2 Cavity Wax Booth	Paint Line 2	E26	75-0155-70	568333	0.02	0.1	-	42.2	-	-	-	-	-	-	-	-	-	-	
Paint Line 2 Undercoat Booth	Paint Line 2	E27	75-0155-25	568333	0.07	0.15	-	17.9	-	-	-	-	-	-	-	-	-	-	
Fascia Paint Line 2 Plastics Coating Lines	Fascia Paint Line 2	E32	75-0155-62	568333	5.6	15.8	-	388.8	-	-	-	-	-	-	-	-	-	-	
Paint Line 1	Paint Line 1	E35	75-0155-51	568333	10.33	45.25	-	550.00	-	-	-	-	-	-	-	-	-	-	
Electrolyte Filling and Degassing	Battery Plant	E43	75-0155-33	568333	-	-	-	40.70	-	-	-	-	-	-	-	-	-	-	
Service Parts E-Coat Line	Service Parts	E41	75-0155-72	568333	-	-	-	20.0	-	-	-	-	-	-	-	-	-	-	
Two Diesel-Fired Emergency RICE Generators[1]	Battery Plant	E44	75-0155-37	568333	0.62	0.13	1.32	0.28	10.8	2.3	-	-	19.76	4.2	0.04	0.009	-	-	Total hours of operation limited to 856 hr during all intervals of twelve months
Battery Sealers and Adhesives	Battery Plant	E45	75-0155-39	568333	-	-	-	32.00	-	-	-	-	-	-	-	-	-	-	
Miscellaneous Solvent Usage	Entire Facility	E51	75-0155-22	568333	-	-	-	575.00	-	-	-	-	-	-	-	-	-	-	
Miscellaneous Sealer and Adhesives	Entire Facility	E52	75-0155-78	568333	-	-	-	101.33	-	-	-	-	-	-	-	-	-	-	
Three Natural Gas Fired Boilers	Boiler House	E61	75-0155-01	568333	3.0	13.14	-	3.7	-	50.4	-	72,167	6.25	22.2	1.0	4.38	-	-	
Natural Gas Fuel Burning Facility Wide[2]	Entire Facility	E62	75-0155-65	568333	8.01	11.70	1.93	8.50	29.5	129.3	-	185,151	35.1	153.9	0.42	0.92	-	-	
Paint Strip House	Paint Strip House	E64	75-0155-61	568333	2.02	8.85	-	15.0	-	-	-	-	-	-	-	-	-	-	
Frame Welding Process	Not Operating (Supplier Park)	E65	75-0155-95	568333	1.0	4.38	-	-	-	-	-	-	-	-	-	-	-	-	
WWL Preparation Platforms (4) and Spray Booths with Ovens (2)	WWL	E66	75-0155-26	568333	2.00	8.76	-	8.4	-	-	-	-	-	-	-	-	-	-	
Facility Wide Gasoline Dispensing	Entire Facility	E67	75-0155-83	568333	-	-	-	5.10	-	-	-	-	-	-	-	-	-	-	
Shot Blasting Operation	Paint Strip House	E68	75-0155-97	568333	0.5	2.19	-	-	-	-	-	-	-	-	-	-	-	-	
Windshield Washer Fluid Operations	Trim and Chassis	E70	75-0155-80	568333	-	-	-	1.0	-	-	-	-	-	-	-	-	-	-	
Natural Gas Fuel Burning Paint Line 1 and Fascia Paint Line 1 Paint Plants	Paint Line 1 and Fascia Paint Line 1	E71	75-0155-52	568333	-	3.04	-	2.20	-	33.6	-	48,111	-	34.00	-	0.24	-	-	Natural Gas usage shall not exceed 800 MMcf during all intervals of 12 consecutive months.
Paint Line 1 Natural Gas Generator	Paint Line 1	E73	75-0155-28	568333	0.024	0.006	1.031	0.26	4.125	1.031	-	-	2.063	0.52	0.002	0.0005	-	-	Total hours of operation limited to 500 hr during all intervals of twelve months
Existing Emergency RICE Engines[1]	Entire Facility	E75	75-0155-57	568333	2.86	0.72	4.48	1.12	17.32	4.33	1,154.61	789.96	107.93	26.98	1.73	0.43	-	-	
Natural Gas Fuel Burning Battery Assembly Plant	Battery Plant	E46	75-0155-56	568333	-	0.95	-	0.69	-	10.5	-	15,035	-	12.50	-	0.075	-	-	Natural Gas usage shall not exceed 250 MMcf during all intervals of 12 consecutive months.
Shot Blaster for Paint Line 1 with Dust Collector Control	Paint Line 1	E69	75-0155-54	568333	0.2	0.88	-	-	-	-	-	-	-	-	-	-	-	-	
Fascia Paint Line 1 Plastics Parts Coating Line and Touch Up Operations	Fascia Paint Line 1	E31	75-0155-53	568333	1.25	5.48	-	200.00	-	-	-	-	-	-	-	-	-	-	
Two Emergency Diesel-Fired Reciprocation Internal Combustion Engines with Generators at Battery Plant	Battery Plant	E47	75-0155-55	568333	1.92	0.048	4.1	0.1	33.63	0.84	-	169	61.5	1.5	0.11	0.003	-	-	Total hours of operation limited to 100 hr during all intervals of twelve months
ILC Emergency Fire Pump	ILC	TBD	75-0155-103	568333	0.09	0.023	0.6	0.16	1.50	0.37			1.72	0.4	0.54	0.135	-	-	
ILC Emergency Generator	ILC	TBD	75-0155-XX	568333	0.13	0.033	1.2	0.30	2.32	0.58			2.65	0.7	0.99	0.248	-	-	
					42.07	132.21	14.70	2,920.27	99.20	233.25	1,154.61	321,423.60	236.97	256.90	4.83	6.45	-	-	

Notes:
1 - CO2e for emergency RICE engiens is calculated based on CO2 only, equivalence green house gases are not included in calculation.
2 - The facilility has accepted a Natural Gas Limit for Source 65.

Section 37
ILC EMERGENCY GENERATOR (Source XX)

This source is being added through Minor Modification #7. The source should be operational by September of 2016.

APC 5	ILC Emergency Generator Engine Source
APC 3	ILC Emergency Generator Stack
APC 30	Compliance Requirements Spark Ignition
APC 19	Description of Compliance
APC 26	Compliance Demonstration by Recordkeeping
APC 28	Existing Emergency Engines Emissions
Calculations	Emission Calculations

State of Tennessee
Department of Environment and Conservation
Division of Air Pollution Control
William R. Snodgrass Tennessee Tower
312 Rosa L. Parks Avenue, 15th Floor
Nashville, TN 37243
Telephone: (615) 532-0554

TITLE V PERMIT APPLICATION
STATIONARY GAS TURBINE OR INTERNAL COMBUSTION ENGINE

GENERAL IDENTIFICATION AND DESCRIPTION

1. **Facility name:**
Nissan North America, Inc. - Smyrna

2. **Stack ID or flow diagram point identification (s):**
Source XX

GAS TURBINE OR INTERNAL COMBUSTION ENGINE DESCRIPTION

3. List all gas turbines and internal combustion engines at this facility on a separate sheet, and please complete an APC 5 form for each piece of equipment.
ILC Emergency Generator

4. Manufacturer and model number:
Caterpillar Model C9 300kW, 277/480 VOLT, 3 PH Standby Emergency Generator System

5. Equipment description:
Emergency engine to power a generator for emergency power. The engine is planned to be a 480 Hp Caterpillar C9 engine.

6. Date of installation or last modification of equipment:
September 2016

7. Rated heat input capacity (in million BTU/Hour) and rated horsepower:
3.18 MMBtu/hr, 480 HP, 300 KW

State which heating value was utilized:
140,000 MMBtu/hr Higher heating value
N/A Lower heating value

8. If equipment is a gas turbine, list type:
_____ Simple cycle
_____ Regenerative cycle
_____ Combined cycle

9. Location of this fuel burning installation in UTM coordinates: UTM Vertical: _____ UTM Horizontal: _____

10. Normal operating schedule: N/A Hrs./Day N/A Days/Wk. N/A Days/Yr. 500 hr/yr, Emergency Operation

FUEL DESCRIPTION

11. Fuels:	Primary fuel	Backup fuel #1	Backup fuel #2	Backup fuel #3
Fuel name	Diesel			
Actual yearly consumption	1,132 gal/yr			

12. (For NSPS turbines only) Manufacturer's rated heat rate at manufacturer's rated peak load (kilojoules per watt hour), or actual measured heat rate based on lower heating value of fuel as measured at actual peak load for the unit:
N/A

13. Page number: Page 37-2 Revision Number: Minor Modification #7 Date of Revision: July 2016

State of Tennessee
Department of Environment and Conservation
Division of Air Pollution Control
William R. Snodgrass Tennessee Tower
312 Rosa L. Parks Avenue, 15th Floor
Nashville, TN 37243
Telephone: (615) 532-0554

TITLE V PERMIT APPLICATION
STACK IDENTIFICATION

GENERAL IDENTIFICATION AND DESCRIPTION

1. **Facility name:**
   Nissan North America, Inc. - Smyrna

2. **Emission source (identify):**
   ILC Emergency Generator Diesel Engine

STACK DESCRIPTION

3. Stack ID (or flow diagram point identification):
   Source XX

4. Stack height above grade in feet:
   9 feet

5. Velocity (data at exit conditions):
   487 _____ (Actual feet per second)

6. Inside dimensions at outlet in feet:
   0.33 feet

7. Exhaust flow rate at exit conditions (ACFM):
   2500 ACFM

8. Flow rate at standard conditions (DSCFM):
   1390

9. Exhaust temperature:
   927 _____ Degrees Fahrenheit (°F)

10. Moisture content (data at exit conditions):
    Unknown _____ Percent TBD _____ Grains per dry standard cubic foot (gr./dscf.)

11. Exhaust temperature that is equaled or exceeded during ninety (90) percent or more of the operating time (for stacks subject to diffusion equation only):
    NA _____ (°F)

12. If this stack is equipped with continuous pollutant monitoring equipment required for compliance, what pollutant(s) does this equipment monitor (e.g., Opacity, SO_2, NO_x, etc.)?
    NA

Complete the appropriate APC form(s) 4, 5, 7, 8, 9, or 10 for each source exhausting through this stack.

BYPASS STACK DESCRIPTION

13. Do you have a bypass stack?
    _____ Yes X _____ No

    If yes, describe the conditions which require its use & complete APC form 4 for the bypass stack. Please identify the stack number(s) of flow diagram point number(s) exhausting through this bypass stack.

14. Page number: 37-3 Revision Number: Minor Modification #7 Date of Revision: July 2016

State of Tennessee
Department of Environment and Conservation
Division of Air Pollution Control
William R. Snodgrass Tennessee Tower
312 Rosa L. Parks Avenue, 15th Floor
Nashville, TN 37243
Telephone: (615) 532-0554

TITLE V PERMIT APPLICATION
CURRENT EMISSIONS REQUIREMENTS AND STATUS

GENERAL IDENTIFICATION AND DESCRIPTION

1. Facility name:	2. Emission source number
Nissan North America, Inc. - Smyrna	Source XX

3. Describe the process emission source / fuel burning installation / incinerator.

ILC Emergency Generator

EMISSIONS AND REQUIREMENTS

4. Identify if only a part of the source is subject to this requirement	5. Pollutant	6. Applicable requirement(s): TN Air Pollution Control Regulations, 40 CFR, permit restrictions, air quality based standards	7. Limitation	8. Maximum actual emissions	9. Compliance status (In/Out)
All	HAP	40 CFR 63 Subpart ZZZZ 40 CFR §63.6590(b)(1)(i)	Initial Notification (only)	Submit Initial Notification (only)	Not Applicable
All	PM	40 CFR 60 Subpart IIII 40 CFR §60.4205(c)	0.20 g/kW-hr	< 0.20 g/kW-hr	Not Applicable
All	NOx + NMHC	40 CFR 60 Subpart IIII 40 CFR §60.4205(b)	4.0 g/kW-hr	< 4.0 g/kW-hr	Not Applicable
All	SO2	TAPCR 1200-03-14-.03(5)	0.99 lb/hr	< 0.99 lb/hr	Not Applicable
All	Sulfur Content	40 CFR 80.5110(b)	15 ppm max	< 15 ppm max	Not Applicable
All	CO	40 CFR 60.4205(b)	3.5 gkW-hr	< 3.5 gkW-hr	Not Applicable

10. Other applicable requirements (new requirements that apply to this source during the term of this permit)

11. Page number:	Revision number:	Date of revision:
37-4	Minor Modification #7	July 2016

State of Tennessee
Department of Environment and Conservation
Division of Air Pollution Control
William R. Snodgrass Tennessee Tower
312 Rosa L. Parks Avenue, 15th Floor
Nashville, TN 37243
Telephone: (615) 532-0554

TITLE V PERMIT APPLICATION
COMPLIANCE CERTIFICATION - MONITORING AND REPORTING
DESCRIPTION OF METHODS USED FOR DETERMINING COMPLIANCE

All sources that are subject to 1200-03-09-.02(11) of the Tennessee Air Pollution Control Regulations are required to certify compliance with all applicable requirements by including a statement within the permit application of the methods used for determining compliance. This statement must include a description of the monitoring, recordkeeping, and reporting requirements and test methods. In addition, the application must include a schedule for compliance certification submittals during the permit term. These submittals must be no less frequent than annually and may need to be more frequent if specified by the underlying applicable requirement or the Technical Secretary.

GENERAL IDENTIFICATION AND DESCRIPTION

1. Facility name: Nissan North America, Inc. - Smyrna
2. Process emission source, fuel burning installation, or incinerator (identify): ILC Emergency Generator
3. Stack ID or flow diagram point identification(s): Source XX

METHODS OF DETERMINING COMPLIANCE

4. This source as described under Item #2 of this application will use the following method(s) for determining compliance with applicable requirements (and special operating conditions from an existing permit). Check all that apply and attach the appropriate form(s)

[ ] Continuous Emission Monitoring (CEM) - APC 20
Pollutant(s): _____

[ ] Emission Monitoring Using Portable Monitors - APC 21
Pollutant(s): _____

[ ] Monitoring Control System Parameters or Operating Parameters of a Process - APC 22
Pollutant(s): _____

[ ] Monitoring Maintenance Procedures - APC 23
Pollutant(s): _____

[ ] Stack Testing - APC 24
Pollutant(s): _____

[ ] Fuel Sampling & Analysis (FSA) - APC 25
Pollutant(s): _____

[✓] Recordkeeping - APC 26
Pollutant(s): PM, CO, NMHC and NOx

[ ] Other (please describe) - APC 27
Pollutant(s): _____

5. Compliance certification reports will be submitted to the Division according to the following schedule:
Start date: As required by permit
And every 365 days thereafter.

6. Compliance monitoring reports will be submitted to the Division according to the following schedule:
Start date: As required by permit
And every 180 days thereafter.

7. Page number: 37-5 Revision number: Minor Modification #7 Date of revision: July 2016

State of Tennessee
Department of Environment and Conservation
Division of Air Pollution Control
William R. Snodgrass Tennessee Tower
312 Rosa L. Parks Avenue, 15th Floor
Nashville, TN 37243
Telephone: (615) 532-0554

TITLE V PERMIT APPLICATION
COMPLIANCE DEMONSTRATION BY RECORDKEEPING

Recordkeeping shall be acceptable as a compliance demonstration method provided that a correlation between the parameter value recorded and the applicable requirement is established.

GENERAL IDENTIFICATION AND DESCRIPTION

1. Facility name:
   Nissan North America, Inc. - Smyrna

2. Stack ID or flow diagram point identification(s):
   Source XX

3. Emission source (identify):
   ILC Emergency Generator

MONITORING AND RECORDKEEPING DESCRIPTION

4. Pollutant(s) or parameter being monitored:
   PM, CO, NMHC and NOx

5. Material or parameter being monitored and recorded:
   Operating hours, Maintenance, and Sulfur Content of Fuel

6. Method of monitoring and recording:
   Hours meter
   Monitor maintenance and preventative maintenance (PM) activities.
   Sulfur content of fuel certified by supplier.

7. Compliance demonstration frequency (specify the frequency with which compliance will be demonstrated):
   Monthly log of operating hours

8. Page number: 37-6
   Revision number: Minor Modification #7
   Date of revision: July 2016

State of Tennessee
Department of Environment and Conservation
Division of Air Pollution Control
William R. Snodgrass Tennessee Tower
312 Rosa L. Parks Avenue, 15th Floor
Nashville, TN 37243
Telephone: (615) 532-0554

TITLE V PERMIT APPLICATION
EMISSIONS FROM PROCESS EMISSION SOURCE / FUEL BURNING INSTALLATION / INCINERATOR

GENERAL IDENTIFICATION AND DESCRIPTION

1. Facility name: Nissan North America, Inc. - Smyrna
2. Stack ID or flow diagram point identification(s): Source XX
3. Process emission source / Fuel burning installation / Incinerator (identify): ILC Emergency Generator

EMISSIONS SUMMARY TABLE – CRITERIA AND FUGITIVE EMISSIONS

4. Complete the following emissions summary for regulated air pollutants. Fugitive emissions shall be included. Attach calculations and emission factor references.

Air Pollutant	Maximum Allowable Emissions		Actual Emissions	
	Tons per Year	Reserved for State use (Pounds per Hour - Item 7, APC 30)	Tons per Year	Reserved for State use (Pounds per Hour- Item 8, APC 30)
Particulate Matter (TSP)	0.033		NA	
(Fugitive Emissions)	NA		NA	
Sulfur Dioxide	0.205		NA	
(Fugitive Emissions)	NA		NA	
Volatile Organic Compounds	0.30		NA	
(Fugitive Emissions)	NA		NA	
Carbon Monoxide	0.58		NA	
(Fugitive Emissions)	NA		NA	
Lead	NA		NA	
(Fugitive Emissions)	NA		NA	
Nitrogen Oxides + NMHC	0.70		NA	
(Fugitive Emissions)	NA		NA	
Total Reduced Sulfur	NA		NA	
(Fugitive Emissions)	NA		NA	
Mercury	NA		NA	
(Fugitive Emissions)	NA		NA	

(Continued on next page)

(Continued from last page)

AIR POLLUTANT	Maximum Allowable Emissions		Actual Emissions	
	Tons per Year	Reserved for State use (Pounds per Hour - Item 7, APC 30)	Tons per Year	Reserved for State use (Pounds per Hour- Item 8, APC 30)
Asbestos	NA		NA	
(Fugitive Emissions)	NA		NA	
Beryllium	NA		NA	
(Fugitive Emissions)	NA		NA	
Vinyl Chloride	NA		NA	
(Fugitive Emissions)	NA		NA	
Fluorides	NA		NA	
(Fugitive Emissions)	NA		NA	
Gaseous Fluorides	NA		NA	
(Fugitive Emissions)	NA		NA	
Greenhouse Gases in CO_2 Equivalents	NA		NA	

EMISSIONS SUMMARY TABLE – FUGITIVE HAZARDOUS AIR POLLUTANTS

5. Complete the following emissions summary for regulated air pollutants that are hazardous air pollutant(s). Fugitive emissions shall be included. Attach calculations and emission factor references.

Air Pollutant & CAS	Maximum Allowable Emissions		Actual Emissions	
	Tons per Year	Reserved for State use (Pounds per Hour - Item 7, APC 30)	Tons per Year	Reserved for State use (Pounds per Hour- Item 8, APC 30)
Particulate HAPs	NA		NA	
Gaseous VOC HAPs	NA		NA	
Gaseous NonVOC HAPs	NA		NA	

6. Page number: 37-8 Revision number: Minor Modification #7 Date of revision July 2016

ILC Generator

ILC Generator
Manufacturer: **Caterpillar**
Model: **C9, 300 KW**
Year: **2016** Tier 3 Engine Certification from EPA for Caterpillar Engine

Maximum fuel flow:	22.7	gal/hr	From: Caterpillar Electric Power - Technical Spec Sheet
Heat content:	140,000	Btu/gal for diesel	
Heat input capacity:	3.18	MMBtu/hr	
Engine rating:	480	hp	From: Caterpillar Performance Data[DM8168]
Engine output:	300	kW	From: Caterpillar Performance Data[DM8168]
Engine Displacement:	9.0	Liters	From: Email from Caterpillar

Pollutant	Emission Rate		Emission Rate		Maximum Hourly Emissions lbs/hr	Fire Pump Engine PTE tpy	Basis for Emission Factors
	Rate	Units	Rate	Units			
PM, PM10 or PM2.5	0.20	g/kW-hr	-	-	0.13	0.033	40 CFR §60.4202(a)(2), §60.4205(b), and Table 1 of 40 CFR 89.112(a)
SO2	-	-	2.05E-03	lb/hp-hr	0.99	0.248	AP-42, Table 3.3-1
NMHC and NOx	4.0	g/kW-hr	2.98	g/hp-hr	2.65	0.70	40 CFR §60.4202(a)(2), §60.4205(b), and Table 1 of 40 CFR 89.112(a)
CO	3.5	g/kW-hr	2.61	g/hp-hr	2.32	0.58	40 CFR §60.4202(a)(2), §60.4205(b), and Table 1 of 40 CFR 89.112(a)
VOCs	-	-	2.51E-03	lb/hp-hr	1.21	0.30	AP-42, Table 3.3-1
HAPs							
Benzene			9.33E-04	lb/MMBtu	3.0E-03	7.4E-04	AP-42, Table 3.3-2
Toluene			4.09E-04	lb/MMBtu	1.3E-03	3.2E-04	AP-42, Table 3.3-2
Xylenes			2.85E-04	lb/MMBtu	9.1E-04	2.3E-04	AP-42, Table 3.3-2
1,3-Butadiene			3.91E-05	lb/MMBtu	1.2E-04	3.1E-05	AP-42, Table 3.3-2
Formaldehyde			1.18E-03	lb/MMBtu	3.8E-03	9.4E-04	AP-42, Table 3.3-2
Acetaldehyde			7.67E-04	lb/MMBtu	2.4E-03	6.1E-04	AP-42, Table 3.3-2
Acrolein			9.25E-05	lb/MMBtu	2.9E-04	7.3E-05	AP-42, Table 3.3-2
Polycyclic Organic Matter (POM) as Polycyclic aromatic Hydrocarbons(PAH)							
Naphthalene			8.48E-05	lb/MMBtu	2.7E-04	6.7E-05	AP-42, Table-3.3-2
Acenaphthylene			5.06E-06	lb/MMBtu	1.6E-05	4.0E-06	AP-42, Table-3.3-2
Acenaphthene			1.42E-06	lb/MMBtu	4.5E-06	1.1E-06	AP-42, Table-3.3-2
Fluorene			2.92E-05	lb/MMBtu	9.3E-05	2.3E-05	AP-42, Table-3.3-2
Phenanthrene			2.94E-05	lb/MMBtu	9.3E-05	2.3E-05	AP-42, Table-3.3-2
Anthracene			1.87E-06	lb/MMBtu	5.9E-06	1.5E-06	AP-42, Table-3.3-2
Fluoranthene			7.61E-06	lb/MMBtu	2.4E-05	6.0E-06	AP-42, Table-3.3-2
Pyrene			4.78E-06	lb/MMBtu	1.5E-05	3.8E-06	AP-42, Table-3.3-2
Benz(a)anthracene			1.68E-06	lb/MMBtu	5.3E-06	1.3E-06	AP-42, Table-3.3-2
Chrysene			3.53E-07	lb/MMBtu	1.1E-06	2.8E-07	AP-42, Table-3.3-2
Benzo(b)fluoranthene			9.91E-08	lb/MMBtu	3.1E-07	7.9E-08	AP-42, Table-3.3-2
Benzo(k)fluoranthene			1.55E-07	lb/MMBtu	4.9E-07	1.2E-07	AP-42, Table-3.3-2
Benzo(a)pyrene			1.88E-07	lb/MMBtu	6.0E-07	1.5E-07	AP-42, Table-3.3-2
Indeno(1,2,3-cd)pyrene			3.75E-07	lb/MMBtu	1.2E-06	3.0E-07	AP-42, Table-3.3-2
Dibenz(a,h)anthracene			5.83E-07	lb/MMBtu	1.9E-06	4.6E-07	AP-42, Table-3.3-2
Benzo(g,h,l)perylene			4.89E-07	lb/MMBtu	1.6E-06	3.9E-07	AP-42, Table-3.3-2
Total POM as PAH			1.68E-04	lb/MMBtu	5.3E-04	1.3E-04	AP-42, Table-3.3-2
TOTAL HAPs					**1.23E-02**	**3.08E-03**	

Conversion factor: 453.5924 g/lb
PTE operating hours: 500 hrs/yr
(Allowed PTE for emergency generators as per the second Title V White Paper. Has also been allowed for other emergency equipment by TDAPC)

NOTES: Emission calculations are based on rule and AP-42 and 40 CFR 60 Subpart IIII.
1. Technical specification information provided by Thompson Power
2. The engine has an Inline-6, 4-stroke-cycle, water-cooled compression ignition design.
3. SO2 emission factor based on AP-42 emission factor, Table 3.3-1, which does not consider a variable sulfur content of diesel fuel.
4. Maximum hourly emissions (lbs/hr) = emission factor (g/hp-hr) x engine rating (hp) ÷ 453.59 g/lb.
5. ILC Generator PTE (tons/yr) = emission rate (lb/hr) x PTE operating hours (hrs/yr) ÷ 2000 lb/ton.
6. CO emission factor is assumed to be the same as for engines that pre-date 2009 models.

Attachment 3

Caterpillar Engine Information

	UNITED STATES ENVIRONMENTAL PROTECTION AGENCY **2016 MODEL YEAR** **CERTIFICATE OF CONFORMITY** **WITH THE CLEAN AIR ACT**	**OFFICE OF TRANSPORTATION** **AND AIR QUALITY** **ANN ARBOR, MICHIGAN 48105**

Certificate Issued To: Caterpillar Inc. (U.S. Manufacturer or Importer) **Certificate Number: GCPXL08.8NZS-001**	**Effective Date:** **07/10/2015** **Expiration Date:** **12/31/2016**	**Byron J. Bunker, Division Director** **Compliance Division**	**Issue Date:** **07/10/2015** **Revision Date:** **N/A**

Model Year: 2016 **Manufacturer Type:** Original Engine Manufacturer **Engine Family:** GCPXL08.8NZS	**Mobile/Stationary Indicator:** Stationary **Emissions Power Category:** 225<=kW<450 **Fuel Type:** Diesel **After Treatment Devices:** No After Treatment Devices Installed **Non-after Treatment Devices:** Electronic Control, Engine Design Modification

Pursuant to Section 111 and Section 213 of the Clean Air Act (42 U.S.C. sections 7411 and 7547) and 40 CFR Part 60, and subject to the terms and conditions prescribed in those provisions, this certificate of conformity is hereby issued with respect to the test engines which have been found to conform to applicable requirements and which represent the following engines, by engine family, more fully described in the documentation required by 40 CFR Part 60 and produced in the stated model year.

This certificate of conformity covers only those new compression-ignition engines which conform in all material respects to the design specifications that applied to those engines described in the documentation required by 40 CFR Part 60 and which are produced during the model year stated on this certificate of the said manufacturer, as defined in 40 CFR Part 60.

It is a term of this certificate that the manufacturer shall consent to all inspections described in 40 CFR 1068 and authorized in a warrant or court order. Failure to comply with the requirements of such a warrant or court order may lead to revocation or suspension of this certificate for reasons specified in 40 CFR Part 60. It is also a term of this certificate that this certificate may be revoked or suspended or rendered void *ab initio* for other reasons specified in 40 CFR Part 60.

This certificate does not cover engines sold, offered for sale, or introduced, or delivered for introduction, into commerce in the U.S. prior to the effective date of the certificate.

THOMPSON

CAT

Thompson Power

SUBMITTAL DATA

FOR

NISSAN
SMYRNA, TENNESSEE

CATERPILLAR MODEL C9
300kW, 277/480 VOLT, 3 PH
STANDBY EMERGENCY
GENERATOR SYSTEM

EQUIPMENT FURNISHED BY:
THOMPSON POWER CORP.
LAVERGNE, TENNESSEE

SUBMITTALS PREPARED BY: DUANE McKEE - PROJECT MANAGER - 06-09-2016
THOMPSON POWER - 1245 BRIDGESTONE BLVD. - LAVERGNE, TN - 37086 - 615/251-8673

THOMPSON

Thompson Power

NISSAN - SMYRNA, TENNESSEE

TABLE OF CONTENTS

1. - BILL OF MATERIAL
2. - CAT C9 300kW GENERATOR SPECIFICATIONS SHEET
3. - C9 SOUND ATTENUATED ENCLOSURE SPEC SHEET
4. - C9 SUB-BASE FUEL TANK
5. - C9 DIP CHART FOR FUEL TANK
6. - C9 DIMENSIONAL DRAWING
7. - GEN SET PERFORMANCE DATA
8. - GENERATOR DATA
9. - EMCP 4.2 GENERATOR SET CONTROLLER
10. - EMCP 4 RS-485 REMOTE ANNUNCIATOR
11. - ADEM A4 ENGINE CONTROLLER
12 . - INTEGRATED VOLTAGE REGULATOR
13. - C9 CIRCUIT BREAKERS
14. - CIRCUIT BREAKER RATINGS
15. - JACKET WATER HEATER
16. - BATTERY CHARGER
17. - START BATTERIES
18. - WIRE PULL LIST
19. - CATERPILLAR WARRANTY STATEMENT

THOMPSON

Thompson Power

1

THOMPSON

Thompson Power

NISSAN , SMYRNA, TN

EQUIPMENT AS FOLLOWS:

1- CATERPILLAR MODEL C9, 300 KW, OUTDOOR, DIESEL, STANDBY, 277/480 VOLT, 60 HERTZ, .8 PF, EMERGENCY GENERATOR SYSTEM PROJECT WITH ACCESSORIES AS FOLLOWS:

EXHAUST SYSTEM
- Exhaust manifold; dry.

AIR INLET SYSTEM
- Aftercooler core.
- Turbocharger.

FUEL SYSTEM
- Primary fuel filter w/integral water separator & secondary filter.
- Fuel cooler.
- Fuel priming pump.
- Flexible fuel lines.
- Engine fuel transfer pump.

GENERATORS AND GENERATOR ATTACHMENTS
- Brushless, PM-excited 2/3 pitch, random wound.
- IP23 Protection.
- Insulation Class H and temperature rise
- Power center, IP22 bottom cable entry
- Segregated low voltage wiring panel

GOVERNING SYSTEM
Cat Electronic Governor (ADEM A4).

LUBE SYSTEM
- Oil cooler.
- Lubricating oil.
- Oil filter and dipstick.
- Oil drain lines with valve; piped to edge of base.
- Fumes disposal; piped to front of radiator.

PROTECTION SYSTEM
Safety shutoffs for:
- High water temperature.
- Overspeed.
- Low oil pressure.

COOLING SYSTEM
- Coolant drain line with valve; terminated on edge of base.
- Fan and belt guards.
- Coolant Level Sensor
- Thermostats and housing, full open temperature 92 deg C (198 deg F).
- Coolant level sight gauge.
- Jacket water pump, gear driven, centrifugal.
- Caterpillar Extended Life Coolant.

STARTING/CHARGING SYSTEM
- 24-volt electric starting motor.
- 24V, 45 amp charging alternator.

GENERAL
- Paint, Caterpillar Yellow.
- Vibration damper.
- Parts book.
- Operation and maintenance manual pack and OMM Storage Compartment
  Wiring diagrams included

PACKAGE SUMMARY
EPA STATIONARY EMERGENCY (EPA TIER 3 EMISSIONS LEVELS).
C9 PACKAGE SUMMARY 60 HZ (480V)

Description
STANDBY POWER
EPA STATIONARY EMERGENCY
UL 2200 LISTED PACKAGE GEN SET
IBC SEISMIC CERT OF COMPLIANCE
60HZ 480 VOLT (WYE)
60 Hz, 300 kW
C9 60Hz 300eKW
LC6114B SE ALT , 105 DEG C @40 DEG C AMB
EMCP4.2 CONTROL PANEL
STANDARD ELECTRONIC GOVERNOR
CONTRO PANEL MOUNTING LEFT
LOCAL ANNUN NFPA99-110/CSA282
QTY 1 REMOTE ANNUNC (ANNR001_S)
600:5 CT RATIO
AUDIO & FUEL ALARM (90% LEVEL)
BREAKER SEPARATION PLATE
DUAL CIRCUIT BREAKER
400A LSI MULT MANUAL 1ST CB
250A LSI MULT MANUAL 2ND CB
POWER CENTER - RH MOUNTED
1ST BREAKER AUXILIARY CONTACTS
2ND BREAKER AUXILIARY CONTACT
SUSE DECALS & FILMS
NEUTRAL BAR NDTS1
NEUTRAL BAR NDTS400
WIDE BASE
1002 GALLON SUB TANK BASE
5 GALLON SPILL CONTAINMENT
GEN MOUNTING DUCT PLATE
L2 SOUND ATTENUATED – WHITE- 71 DBA 23'
STANDARD RADIATOR
CANOPIED SILENCER-INTERNAL
150 MPH IBC CERT WIND ENCLOSUE
STD AIR CLEANER
PERMANENT MAGNET EXCITATION
GEN SPACE HEATER
INTEGRATED VOLTAGE REGULATOR
OVERSIZED WET BATTERY
BATTERY CHARGER 10 AMP DUAL
JACKET WATER HEATER 2KW 240VAC
HEATERS CONTROL GROUP

STD TESTING - GENERATOR SET
CAT DECALS
PGS TEST REPORT @ 0.8 PF
ALTERNATOR TEST REPORT

Description
AC Enclosure Light
OPERATORS MANUALS
SPARE FILTERS

Description
LOT AUTOMATIC TRANSFER SWITCHES 1-150 AMP AND 1-400 AMP, BYPASS ISOLATION, CLOSED TRANSITION, 4 POLE

. WARRANTY 2 YEARS CATERPILLAR, ONE YEAR VENDOR ITEMS PER PUBLISHED WARRANTY STATEMENTS.

. START UP, OWNERS TRAINING AND BUILDING LOAD TESTING INCLUDED, DURING NORMAL WORKING HOURS M-F.

. LOAD BANK TESTING AT 480 VOLT, UNITY PF INCLUDED, DURING NORMAL WORKING HOURS M-F.

THOMPSON

Thompson Power

2

ELECTRIC POWER - Technical Spec Sheet
STANDARD

C9 ACERT
300 ekW/ 375 kVA/ 60 Hz/ 1800 rpm/ 480 V/ 0.8 Power Factor

Rating Type: STANDBY

Emissions: U.S. EPA Certified for Stationary Emergency Use Only (Tier 3 Nonroad Equivalent Emission Standards)

Image shown may not reflect actual configuration

C9 ACERT
300 ekW/ 375 kVA
60 Hz/ 1800 rpm/ 480 V

	Metric	English
Package Performance		
Genset Power Rating with Fan @ 0.8 Power Factor	300 ekW	
Genset Power Rating	375 kVA	
Aftercooler (Separate Circuit)	N/A	N/A
Fuel Consumption		
100% Load with Fan	86.0 L/hr	22.7 gal/hr
75% Load with Fan	66.8 L/hr	17.6 gal/hr
50% Load with Fan	51.5 L/hr	13.6 gal/hr
25% Load with Fan	33.1 L/hr	8.7 gal/hr
Cooling System[1]		
Engine Coolant Capacity	13.9 L	3.7 gal
Inlet Air		
Combustion Air Inlet Flow Rate	26.0 m³/min	916.6 cfm
Max. Allowable Combustion Air Inlet Temp	50 ° C	123 ° F
Exhaust System		
Exhaust Stack Gas Temperature	497.3 ° C	927.2 ° F
Exhaust Gas Flow Rate	69.7 m³/min	2460.9 cfm
Exhaust System Backpressure (Maximum Allowable)	10.0 kPa	40.0 in. water

© 2016 Caterpillar All Rights Reserved

C9 ACERT
300 ekW/ 375 kVA/ 60 Hz/ 1800 rpm/ 480 V/ 0.8 Power Factor

Rating Type: STANDBY

Emissions: U.S. EPA Certified for Stationary Emergency Use Only (Tier 3 Nonroad Equivalent Emission Standards)

Heat Rejection		
Heat Rejection to Jacket Water	120 kW	6838 Btu/min
Heat Rejection to Exhaust (Total)	320 kW	18223 Btu/min
Heat Rejection to Aftercooler	92 kW	5239 Btu/min
Heat Rejection to Atmosphere from Engine	23 kW	1312 Btu/min
Heat Rejection to Atmosphere from Generator	22 kW	1245 Btu/min

Alternator[2]	
Motor Starting Capability @ 30% Voltage Dip	683 skVA
Current	451 amps
Frame Size	LC5014J
Excitation	SE
Temperature Rise	150 ° C

Emissions (Nominal)[3]		
NOx	2196.0 mg/Nm³	4.0 g/hp-hr
CO	115.5 mg/Nm³	0.2 g/hp-hr
HC	23.1 mg/Nm³	0.1 g/hp-hr
PM	12.7 mg/Nm³	0.0 g/hp-hr

DEFINITIONS AND CONDITIONS

1. For ambient and altitude capabilities consult your Cat dealer. Air flow restriction (system) is added to existing restriction from factory.

2. UL 2200 Listed packages may have oversized generators with a different temperature rise and motor starting characteristics. Generator temperature rise is based on a 40° C ambient per NEMA MG1-32.

3. Emissions data measurement procedures are consistent with those described in EPA CFR 40 Part 89, Subpart D & E and ISO8178-1 for measuring HC, CO, PM, NOx. Data shown is based on steady state operating conditions of 77° F, 28.42 in HG and number 2 diesel fuel with 35° API and LHV of 18,390 btu/lb. The nominal emissions data shown is subject to instrumentation, measurement, facility and engine to engine variations. Emissions data is based on 100% load and thus cannot be used to compare to EPA regulations which use values based on a weighted cycle.

© 2016 Caterpillar All Rights Reserved

Rating Type: STANDBY

Emissions: U.S. EPA Certified for Stationary Emergency Use Only (Tier 3 Nonroad Equivalent Emission Standards)

Applicable Codes and Standards:
AS1359, CSA C22.2 No100-04, UL142,UL489, UL869, UL2200,
NFPA37, NFPA70, NFPA99, NFPA110, IBC, IEC60034-1, ISO3046, ISO8528,
NEMA MG1-22,NEMA MG1-33, 2006/95/EC, 2006/42/EC, 2004/108/EC.

Note: Codes may not be available in all model configurations. Please consult your local Cat Dealer representative for availability.

√ **STANDBY:**Output available with varying load for the duration of the interruption of the normal source power. Average power output is 70% of the standby power rating. Typical operation is 200 hours per year, with maximum expected usage of 500 hours per year.

Ratings are based on SAE J1349 standard conditions. These ratings also apply at ISO3046 standard conditions

Fuel Rates are based on fuel oil of 35° API [16° C (60° F)] gravity having an LHV of 42 780 kJ/kg (18,390 Btu/lb) when used at 29° C (85° F) and weighing 838.9 g/liter (7.001 lbs/U.S. gal.). Additional ratings may be available for specific customer requirements, contact your Cat representative for details. For information regarding Low Sulfur fuel and Biodiesel capability, please consult your Cat dealer.

www.Cat-ElectricPower.com

Performance No.: DM8168-04

Feature Code: C09DE48

Generator Arrangement: 4490575

Date: 06/07/2016

Source Country: U.S.

The International System of Units (SI) is used in this publication. CAT, CATERPILLAR, their respective logos, ADEM, EUI, S•O•S, "Caterpillar Yellow" and the "Power Edge" trade dress, as well as corporate and product identity used herein, are trademarks of Caterpillar and may not be used without permission.

© 2016 Caterpillar All Rights Reserved

THOMPSON

CAT

Thompson Power

3

Picture shown may not reflect actual configuration

C9 ACERT™ Sound Attenuated and Weather Protective Enclosures

U.S. Sourced
180-300 kW 60 Hz

Features

Robust/Highly Corrosion Resistant Construction

- Factory-installed on skid base
- Environmentally friendly, polyester powder baked paint
- Zinc plated or stainless steel fasteners
- Internally mounted, critical exhaust silencing system (sound attenuated only)
- Externally front-mounted, enclosed exhaust silencing system (weather protective only)
- Designed and tested to comply with UL 2200 listed generator set package
- Compression door latches providing solid door seal

Excellent Access

- Large cable entry area for installation ease
- Accommodates side-mounted single or multiple breakers
- Two doors on both sides
- Vertically hinged allow 180° opening rotation and retention with door stays
- Lube oil and coolant drains routed to the exterior of the enclosure base

Transportability

- These enclosures are of extremely rugged construction to withstand outdoor exposure and rough handling common on many construction sites.

Security and Safety

- Lockable access doors which give full access to control panel and breaker
- Cooling fan and battery charging alternator fully guarded
- Fuel fill, oil fill, and battery can only be reached via lockable access
- Externally mounted emergency stop button
- Designed for spreader bar lifting to ensure safety
- Stub-up area is rodent proof

Options

- Caterpillar yellow* or white paint
- Weather protective enclosure constructed with 14 gauge steel
- Sound attenuated Level 1 constructed with 14-gauge steel
- Sound attenuated Level 2 constructed with 14-gauge steel
- Sound attenuated enclosure constructed with 12-gauge aluminum (5052 grade)
- UL listed 203 gallon integral fuel tank
- UL listed 660 or 1002 gallon sub-base fuel tanks
- Seismic certification per applicable building codes:
  IBC 2000, IBC 2003, IBC 2006, IBC 2009, IBC 2012, CBC 2007, CBC 2010
- IBC certification for 150 mph wind loading
- Anchoring details are site specific and are dependent on many factors such as generator set size, weight, and concrete strength. IBC certification requires that the anchoring system used is reviewed and approved by a professional engineer.
- Control panel viewing window**

*Not available with aluminum enclosures
**Steel sound attenuated only

Enclosure Sound Pressure Levels at Standby Ratings

Enclosure Type	Standby ekW	Cooling Air Flow Rate		Ambient Capability*		(dBA) @ 7m (23 ft) at 100% Load
		m³/min	cfm	°C	°F	
Sound Attenuated Level 2	300	351	12395	46	115	71
	250	351	12395	53	127	71
	200	351	12395	59	138	71
Sound Attenuated Level 1	300	351	12395	46	115	75
	250	351	12395	53	127	74
	200	351	12395	59	138	74
Weather Protective	300	516	18222	49	120	82
	250	516	18222	55	131	82
	200	516	18222	60	140	82
Aluminum Sound Attenuated	300	351	12395	46	115	73
	250	351	12395	53	127	72
	200	351	12395	59	138	72

*Cooling system performance at sea level. Consult your Cat® dealer for site specific ambient and altitude capabilities.

Enclosure Sound Pressure Levels at Prime Ratings

Enclosure Type	Prime ekW	Cooling Air Flow Rate		Ambient Capability*		(dBA) @ 7m (23 ft) at 100% Load
		m³/min	cfm	°C	°F	
Sound Attenuated Level 2	275	351	12395	50	122	71
	225	351	12395	56	133	71
	180	351	12395	60	140	71
Sound Attenuated Level 1	275	351	12395	50	122	75
	225	351	12395	56	133	74
	180	351	12395	60	140	73
Weather Protective	275	516	18222	52	126	82
	225	516	18222	59	138	82
	180	516	18222	60	140	82
Aluminum Sound Attenuated	275	351	12395	46	115	72
	225	351	12395	56	133	72
	180	351	12395	60	140	72

*Cooling system performance at sea level. Consult your Cat dealer for site specific ambient and altitude capabilities.

The sound pressure level data shown in the tables above is quoted as free field and is for guidance only. Actual levels produced may vary according to site conditions.

Component Weights to Calculate Package Weight

Narrow Skid		Wide Skid		Steel Enclosures						Aluminum Enclosure	
				Weather Protective		Sound Attenuated Level 1		Sound Attenuated Level 2		Sound Attenuated	
kg	lb	kg	lb	kg	lb	kg	lb	kg	lb	kg	lb
219	483	468	1032	660	1455	1062	2341	1062	2341	629	1387

Enclosure on a UL Listed 660 Gallon Sub-base Fuel Tank Base

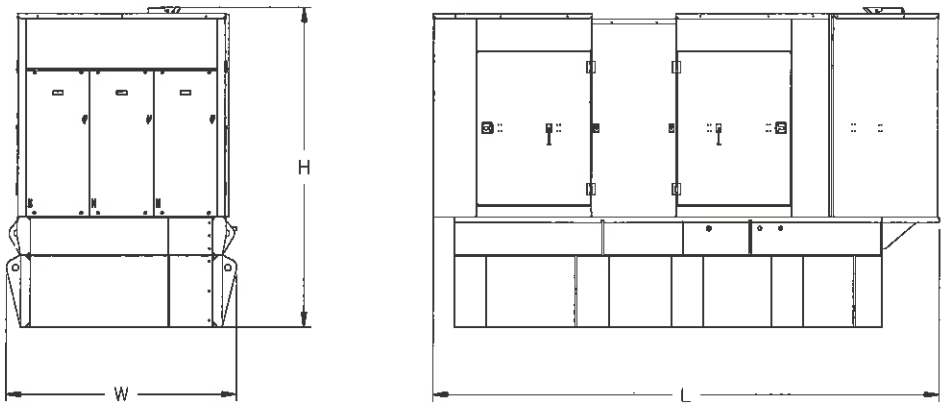

Enclosure Type	Length "L"		Width "W"		Height "H"	
	mm	in	mm	in	mm	in
Sound Attenuated	4515	177.8	2056	80.9	2831	111.5
Weather Protective	4035	158.9	2056	80.9	2777	109.3

Enclosure on a UL Listed 1002 Gallon Sub-base Fuel Tank Base

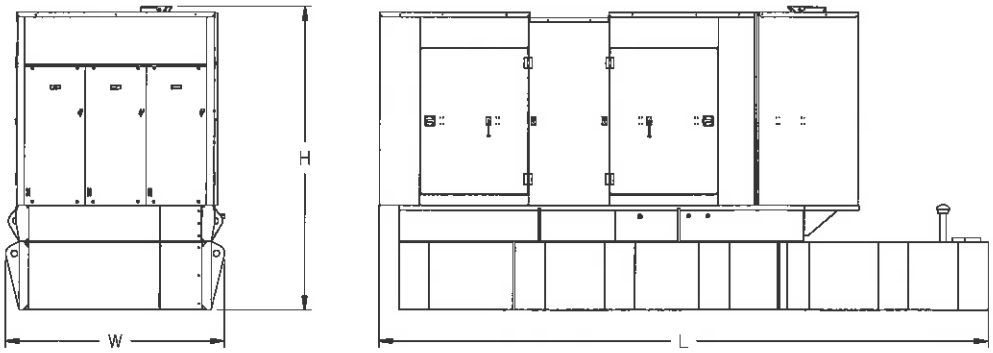

Enclosure Type	Length "L"		Width "W"		Height "H"	
	mm	in	mm	in	mm	in
→ Sound Attenuated	5739	225.9	2056	80.9	2831	111.5
Weather Protective	5739	225.9	2056	80.9	2777	109.3

©2015 Caterpillar
All rights reserved.

Materials and specifications are subject to change without notice. CAT, CATERPILLAR, their respective logos, "Caterpillar Yellow", the "Power Edge" trade dress as well as corporate and product identity used herein, are trademarks of Caterpillar and may not be used without permission.

THOMPSON

Thompson Power

4

C9
Integral and Sub-Base Fuel Tanks

US Sourced
Diesel Generator Set
180 – 300 kW 60 Hz

Picture shown may not represent actual package

Features

- UL Listed for United States (UL 142) and Canada (CAN/ULC S601)
- Facilitate compliance with NFPA 30 code, NFPA 37 and 110 standards and CSA C282 code.
- Dual wall
- Lockable fuel fill cap, 4" (101.6mm) NPT
- Low fuel level warning standard, customer configurable warning or shutdown Primary tank leak detection switch in containment basin
- Tank design provides capacity for thermal expansion of fuel
- Fuel supply dip tube is positioned so as not to pick up fuel sediment
- Fuel return and supply dip tube is separated by an internal baffle to prevent immediate re-supply of heated return fuel
- Pressure washed with an iron phosphate solution
- Interior tank surfaces coated with a solvent-based thin-film rust preventative
- Heavy guage steel gussets with internal lifting rings
- Primary and secondary tanks are leak tested at 20.7 kPa (3 psi) minimum
- Compatible with open packages and enclosures
- Gloss black polyester alkyd enamel exterior paint
- Welded steel containment basin (minimum of 110% of primary tank capacity)
- Direct reading fuel gauge with variable electrical output
- Emergency vents on primary and secondary tanks are sized in accordance with NFPA 30

Sub Base

- The sub-base fuel tank mounts below the generator set wide base

Integral Base

- Integral diesel fuel tank is incorporated into the generator set base frame
- Robust base design includes linear vibration isolators between tank base and engine generator

Options

- Audio/visual fuel level alarm panel
- 5 gal (18.9 L) spill containment
- 5 gal (18.9 L) spill containment with fuel fill drop tube with in 6" (152mm) from bottom of tank
- 5 gal (18.9 L) spill containment with overfill prevention valve and fuel fill drop tube with in 6" (152mm) from bottom of tank
- ULC Listed 7.5 gal (28.4 L) spill containment with vent extensions, vent whistle, and drop tube facilitating compliance with CSA B139-09
- ULC Listed 7.5 gal (28.4 L) spill containment with overfill prevention valve, vent extensions, vent whistle and drop tube facilitating compliance with CSA B139-09

Integral & Sub-Base Fuel Tank Base Capacities with Fuel Tank Dimensions & Weights

Integral – Width (W) 2014 mm (79.3 in)

Sub-base – Width (W) 2056 mm (81.0 in)

Open Set, Weather Protective Enclosure & Sound Attenuated

C9 Tank Design	Feature Code	Total Capacity		Useable Capacity		Tank Only						Overall Package Height with Tank					
						Dry Weight		Height 'H'		Length 'L'		Open		Weather Protective		Sound Attenuated	
		Liter	Gallon	Liter	Gallon	kg	lb	mm	in	mm	in	mm	in	mm	in	mm	in
Integral	FTDW010	784	207	770	203	891	1964	635	25.0	3810	150.0	2360	90.0	2438	96.0	2492	98.1
Sub-Base	FTDW008	2476	654	2435	643	1468	3236	635	25.0	3810	150.0	2699	106.3	2777	109.4	2831	111.5
Sub-Base	FTDW009	3941	1041	3876	1024	1832	4039	635	25.0	5550	219.0	2699	106.3	2777	109.4	2831	111.5
Sub-Base	FTDW012	4285	1132	4221	1115	–	–	686	27.0	5550	219.0	5550	219.0	2750	108.3	2828	111.4

Estimated Run Times (Hours) at 100% Load

C9 Tank Design	Feature Code	Standby Ratings (ekW)			Prime Ratings (ekW)		
		300	250	200	275	225	180
Integral	FTDW010	9	11	13	10	11	14
Sub-Base	FTDW008	28	33	42	30	35	46
Sub-Base	FTDW009	45	53	67	48	56	73
Sub-Base	FTDW012	48	57	72	52	60	79

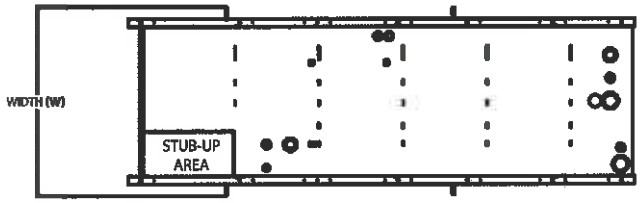

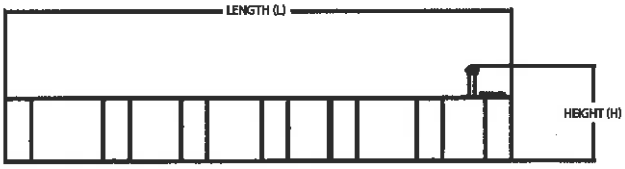

The heights listed above do not include lumber used during manufacturing and shipping.

Tanks with full electrical stub-up area include removable end channel. Tanks with RH/LH stub-up include stub-up area directly below the circuit breaker or power terminal strips. Dimensions include weather-protective enclosure exhaust system.

Dual wall sub-base tanks are UL Listed and constructed in accordance with UL Standard for Safety UL 142, Steel Aboveground Tanks for Flammable and Combustible Liquids and Canada CAN/ULC S601, Standard for Shop Fabricated Steel Aboveground Horizontal Tanks for Flammable and Combustible Liquids.

Fuel tanks and applicable options facilitate compliance with the following United States NFPA Code and Standards:
NFPA 30: Flammable and Combustible Liquids Code
NFPA 37: Standard for the Installation and Use of Stationary Combustion Engines and Gas Turbines
NFPA 110: Standard for Emergency and Standby Power Systems

Fuel tanks and applicable options facilitate compliance with the following Canadian Standard and Code:
CSA C282 – Emergency Electrical Power Supply for Buildings
CSA B139-09 – Installation Code for Oil-Burning Equipment

The following sub-base fuel tanks meet Chicago code for containment and labelling:
FTDW008
FTDW009
FTDW012

www.Cat-ElectricPower.com
©2016 Caterpillar
All rights reserved.

Materials and specifications are subject to change without notice.
CAT, CATERPILLAR, their respective logos, "Caterpillar Yellow",
the "Power Edge" trade dress as well as corporate and product identity used
herein, are trademarks of Caterpillar and may not be used without permission.

THOMPSON

Thompson Power

5

C9
Dip Charts for Fuel Tanks

U.S. Sourced
Diesel Generator Set
180-300 kW 60 Hz

Integral Tank FTDW010				Sub-Base Tank FTDW008			
Inches of Fuel on Dipstick	Measured Gallons	Inches of Fuel on Dipstick	Measured Gallons	Inches of Fuel on Dipstick	Measured Gallons	Inches of Fuel on Dipstick	Measured Gallons
0.5	4.7	13.0	369.8	13.0	122.5	0.5	14.2
1.0	9.4	13.5	384.1	13.5	127.2	1.0	28.4
1.5	14.1	14.0	398.3	14.0	131.9	1.5	42.7
2.0	18.8	14.5	412.5	14.5	136.7	2.0	56.9
2.5	23.6	15.0	426.7	15.0	141.4	2.5	71.1
3.0	28.3	15.5	441.0	15.5	146.1	3.0	85.3
3.5	33.0	16.0	455.2	16.0	150.8	3.5	99.6
4.0	37.7	16.5	469.4	16.5	155.5	4.0	113.8
4.5	42.4	17.0	483.6	17.0	160.2	4.5	128.0
5.0	47.1	17.5	497.9	17.5	164.9	5.0	142.2
5.5	51.8	18.0	512.1	18.0	169.6	5.5	156.5
6.0	56.5	18.5	526.3	18.5	174.4	6.0	170.7
6.5	61.3	19.0	540.5	19.0	179.1	6.5	184.9
7.0	66.0	19.5	554.8	19.5	183.8	7.0	199.1
7.5	70.7	20.0	569.0	20.0	188.5	7.5	213.4
8.0	75.4	20.5	583.2	20.5	193.2	8.0	227.6
8.5	80.1	21.0	597.4	21.0	197.9	8.5	241.8
9.0	84.8	21.5	611.7	21.5	202.6	9.0	256.0
9.5	89.5	22.0	625.9	22.0	207.3	9.5	270.3
10.0	94.2	22.5	640.1			10.0	284.5
10.5	99.0	23.0	654.3			10.5	298.7
11.0	103.7	23.5	668.6			11.0	312.9
11.5	108.4					11.5	327.2
12.0	113.1					12.0	341.4
12.5	117.8					12.5	355.6

Dip Charts

Sub-Base Tank FTDW009				Sub-Base Tank FTDW012			
Inches of Fuel on Dipstick	Measured Gallons	Inches of Fuel on Dipstick	Measured Gallons	Inches of Fuel on Dipstick	Measured Gallons	Inches of Fuel on Dipstick	Measured Gallons
0.5	22.6	13.0	588.5	0.5	22.6	13.0	588.5
1.0	45.3	13.5	611.2	1.0	45.3	13.5	611.2
1.5	67.9	14.0	633.8	1.5	67.9	14.0	633.8
2.0	90.5	14.5	656.5	2.0	90.5	14.5	656.5
2.5	113.2	15.0	679.1	2.5	113.2	15.0	679.1
3.0	135.8	15.5	701.7	3.0	135.8	15.5	701.7
3.5	158.5	16.0	724.4	3.5	158.5	16.0	724.4
4.0	181.1	16.5	747.0	4.0	181.1	16.5	747.0
4.5	203.7	17.0	769.6	4.5	203.7	17.0	769.6
5.0	226.4	17.5	792.3	5.0	226.4	17.5	792.3
5.5	249.0	18.0	814.9	5.5	249.0	18.0	814.9
6.0	271.6	18.5	837.6	6.0	271.6	18.5	837.6
6.5	294.3	19.0	860.2	6.5	294.3	19.0	860.2
7.0	316.9	19.5	882.8	7.0	316.9	19.5	882.8
7.5	339.5	20.0	905.5	7.5	339.5	20.0	905.5
8.0	362.2	20.5	928.1	8.0	362.2	20.5	928.1
8.5	384.8	21.0	950.7	8.5	384.8	21.0	950.7
9.0	407.5	21.5	973.4	9.0	407.5	21.5	973.4
9.5	430.1	22.0	996.0	9.5	430.1	22.0	996.0
10.0	452.7	22.5	1018.6	10.0	452.7	22.5	1018.6
10.5	475.4	23.0	1041.3	10.5	475.4	23.0	1041.3
11.0	498.0			11.0	498.0	23.5	1063.9
11.5	520.6			11.5	520.6	24.0	1086.6
12.0	543.3			12.0	543.3	24.5	1109.2
12.5	565.9			12.5	565.9	25.0	1131.8

www.Cat-ElectricPower.com
©2016 Caterpillar
All rights reserved.

Materials and specifications are subject to change without notice. CAT, CATERPILLAR, their respective logos, "Caterpillar Yellow", the "Power Edge" trade dress as well as corporate and product identity used herein, are trademarks of Caterpillar and may not be used without permission.

THOMPSON

Thompson Power

6

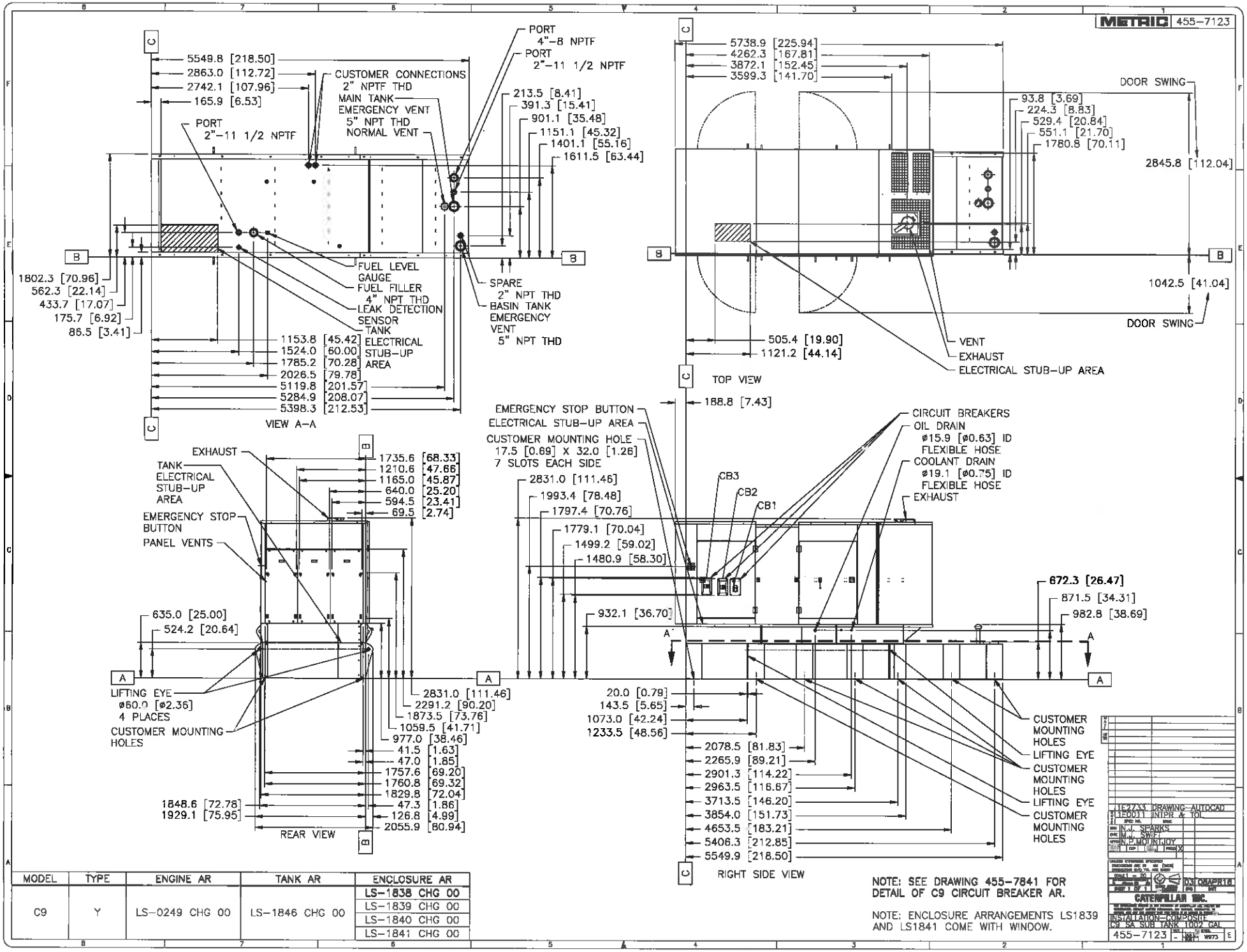

MODEL	TYPE	ENGINE AR	TANK AR	ENCLOSURE AR
C9	Y	LS-0249 CHG 00	LS-1846 CHG 00	LS-1838 CHG 00
				LS-1839 CHG 00
				LS-1840 CHG 00
				LS-1841 CHG 00

THOMPSON

Thompson Power

7

PERFORMANCE DATA[DM8168]

June 8, 2016

Performance Number: DM8168

Change Level: 04

SALES MODEL:	C9	**COMBUSTION:**	DI
ENGINE POWER (BHP):	480	**ENGINE SPEED (RPM):**	1,800
GEN POWER W/O FAN (EKW):	319.0	**HERTZ:**	60
GEN POWER WITH FAN (EKW):	300.0	**FAN POWER (HP):**	36.5
COMPRESSION RATIO:	16.1	**ASPIRATION:**	TA
RATING LEVEL:	STANDBY	**AFTERCOOLER TYPE:**	ATAAC
PUMP QUANTITY:	1	**AFTERCOOLER CIRCUIT TYPE:**	JW+OC, ATAAC
FUEL TYPE:	DIESEL	**INLET MANIFOLD AIR TEMP (F):**	120
MANIFOLD TYPE:	DRY	**JACKET WATER TEMP (F):**	192.2
GOVERNOR TYPE:	ELEC	**TURBO CONFIGURATION:**	SINGLE
CAMSHAFT TYPE:	STANDARD	**TURBO QUANTITY:**	1
IGNITION TYPE:	CI	**TURBOCHARGER MODEL:**	S310-1.25
INJECTOR TYPE:	EUI	**CERTIFICATION YEAR:**	2005
REF EXH STACK DIAMETER (IN):	4	**PISTON SPD @ RATED ENG SPD (FT/MIN):**	1,759.8
MAX OPERATING ALTITUDE (FT):	3,281		

INDUSTRY	SUBINDUSTRY	APPLICATION
ELECTRIC POWER	STANDARD	PACKAGED GENSET

General Performance Data

GENSET POWER WITH FAN	PERCENT LOAD	ENGINE POWER	BRAKE MEAN EFF PRES (BMEP)	BRAKE SPEC FUEL CONSUMPTN (BSFC)	VOL FUEL CONSUMPTN (VFC)	INLET MFLD PRES	INLET MFLD TEMP	EXH MFLD TEMP	EXH MFLD PRES	ENGINE OUTLET TEMP
EKW	%	BHP	PSI	LB/BHP-HR	GAL/HR	IN-HG	DEG F	DEG F	IN-HG	DEG F
300.0	100	480	393	0.332	22.7	82.5	122.6	1,247.3	60.6	927.2
270.0	90	430	352	0.334	20.5	78.7	121.1	1,179.5	55.9	877.6
240.0	80	383	314	0.339	18.5	74.9	121.5	1,120.8	51.5	840.4
225.0	75	361	295	0.342	17.6	73.0	121.6	1,094.5	49.4	826.3
210.0	70	339	277	0.347	16.8	71.0	121.7	1,071.1	47.3	817.6
180.0	60	296	242	0.360	15.2	66.4	121.7	1,028.3	43.1	800.8
150.0	50	253	207	0.376	13.6	61.1	121.7	988.0	38.7	784.5
120.0	40	212	173	0.390	11.8	52.8	121.7	944.9	32.8	768.7
90.0	30	170	139	0.403	9.8	42.5	121.6	899.1	25.9	752.9
75.0	25	149	122	0.411	8.7	36.9	121.6	875.4	22.3	745.0
60.0	20	127	104	0.419	7.6	30.8	121.6	850.8	18.7	737.0
30.0	10	82.9	68	0.441	5.2	17.9	121.5	723.0	11.7	650.3

GENSET POWER WITH FAN	PERCENT LOAD	ENGINE POWER	COMPRESSOR OUTLET PRES	COMPRESSOR OUTLET TEMP	WET INLET AIR VOL FLOW RATE	ENGINE OUTLET WET EXH GAS VOL FLOW RATE	WET INLET AIR MASS FLOW RATE	WET EXH GAS MASS FLOW RATE	WET EXH VOL FLOW RATE (32 DEG F AND 29.98 IN HG)	DRY EXH VOL FLOW RATE (32 DEG F AND 29.98 IN HG)
EKW	%	BHP	IN-HG	DEG F	CFM	CFM	LB/HR	LB/HR	FT3/MIN	FT3/MIN
300.0	100	480	83	450.8	916.6	2,460.9	3,985.8	4,144.9	872.5	798.0
270.0	90	430	80	428.0	893.4	2,308.9	3,884.5	4,028.0	848.2	780.6
240.0	80	383	76	406.4	870.9	2,173.0	3,772.3	3,902.1	821.8	760.2
225.0	75	361	74	396.1	859.8	2,109.4	3,711.7	3,835.1	806.5	747.8
210.0	70	339	72	386.3	846.8	2,047.1	3,649.5	3,766.9	788.0	732.2
180.0	60	296	67	367.7	814.1	1,926.8	3,499.4	3,605.2	751.6	701.1
150.0	50	253	62	350.2	772.8	1,810.5	3,315.8	3,410.8	715.5	669.7
120.0	40	212	54	321.8	707.1	1,643.7	3,018.0	3,100.6	657.9	617.9
90.0	30	170	43	282.8	623.3	1,424.8	2,642.8	2,711.5	577.7	544.3
75.0	25	149	38	260.3	576.0	1,299.8	2,434.3	2,495.5	530.5	500.6
60.0	20	127	31	235.4	524.5	1,162.9	2,209.5	2,262.9	477.8	451.6
30.0	10	82.9	18	178.8	412.8	851.2	1,728.1	1,764.7	377.1	358.8

Heat Rejection Data

GENSET POWER WITH FAN	PERCENT LOAD	ENGINE POWER	REJECTION TO JACKET WATER	REJECTION TO ATMOSPHERE	REJECTION TO EXH	EXHUAST RECOVERY TO 350F	FROM OIL COOLER	FROM AFTERCOOLER	WORK ENERGY	LOW HEAT VALUE ENERGY	HIGH HEAT VALUE ENERGY
EKW	%	BHP	BTU/MIN	BTU/MIN	BTU/MIN	BTU/MIN	BTU/MIN	BTU/MIN	BTU/MIN	BTU/MIN	BTU/MIN
300.0	100	480	6,838	1,312	18,223	10,196	2,598	5,239	20,357	48,785	51,968
270.0	90	430	6,227	1,100	16,530	8,999	2,344	4,774	18,249	44,009	46,881
240.0	80	383	5,718	954	15,163	8,062	2,120	4,304	16,263	39,804	42,402
225.0	75	361	5,492	885	14,576	7,680	2,017	4,080	15,306	37,868	40,339
210.0	70	339	5,288	827	14,082	7,393	1,922	3,868	14,366	36,078	38,432
180.0	60	296	4,912	823	13,054	6,800	1,739	3,448	12,536	32,644	34,774
150.0	50	253	4,565	786	11,966	6,184	1,555	3,034	10,749	29,195	31,100
120.0	40	212	4,219	770	10,567	5,402	1,348	2,419	8,983	25,307	26,959
90.0	30	170	3,811	699	8,973	4,534	1,120	1,706	7,210	21,028	22,400
75.0	25	149	3,554	623	8,129	4,085	999	1,352	6,312	18,747	19,970
60.0	20	127	3,271	492	7,247	3,625	871	1,008	5,399	16,350	17,417
30.0	10	82.9	2,624	519	4,878	2,172	597	397	3,514	11,200	11,931

Emissions Data

RATED SPEED POTENTIAL SITE VARIATION: 1800 RPM

GENSET POWER WITH FAN		EKW	300.0	225.0	150.0	75.0	30.0
PERCENT LOAD		%	100	75	50	25	10
ENGINE POWER		BHP	480	361	253	149	82.9
TOTAL NOX (AS NO2)		G/HR	2,032	1,047	539	288	217
TOTAL CO		G/HR	214	166	242	203	191
TOTAL HC		G/HR	50	54	81	76	65
PART MATTER		G/HR	30.2	29.7	66.7	43.9	28.4
TOTAL NOX (AS NO2)	(CORR 5% O2)	MG/NM3	2,371.7	1,572.5	1,056.2	887.0	1,244.7
TOTAL CO	(CORR 5% O2)	MG/NM3	216.0	218.7	414.7	579.4	974.9
TOTAL HC	(CORR 5% O2)	MG/NM3	43.7	62.4	119.7	182.7	276.3
PART MATTER	(CORR 5% O2)	MG/NM3	24.8	34.3	101.8	98.2	126.1
TOTAL NOX (AS NO2)	(CORR 5% O2)	PPM	1,155	766	514	432	606
TOTAL CO	(CORR 5% O2)	PPM	173	175	332	464	780
TOTAL HC	(CORR 5% O2)	PPM	82	116	223	341	516
TOTAL NOX (AS NO2)		G/HP-HR	4.27	2.92	2.13	1.94	2.61
TOTAL CO		G/HP-HR	0.45	0.46	0.96	1.36	2.30
TOTAL HC		G/HP-HR	0.11	0.15	0.32	0.51	0.79
PART MATTER		G/HP-HR	0.06	0.08	0.26	0.29	0.34
TOTAL NOX (AS NO2)		LB/HR	4.48	2.31	1.19	0.64	0.48
TOTAL CO		LB/HR	0.47	0.37	0.53	0.45	0.42
TOTAL HC		LB/HR	0.11	0.12	0.18	0.17	0.14
PART MATTER		LB/HR	0.07	0.07	0.15	0.10	0.06

RATED SPEED NOMINAL DATA: 1800 RPM

GENSET POWER WITH FAN		EKW	300.0	225.0	150.0	75.0	30.0
PERCENT LOAD		%	100	75	50	25	10
ENGINE POWER		BHP	480	361	253	149	82.9
TOTAL NOX (AS NO2)		G/HR	1,881	970	499	267	201
TOTAL CO		G/HR	115	89	129	109	102
TOTAL HC		G/HR	26	29	43	40	35
TOTAL CO2		KG/HR	225	175	135	86	51
PART MATTER		G/HR	15.5	15.2	34.2	22.5	14.6
TOTAL NOX (AS NO2)	(CORR 5% O2)	MG/NM3	2,196.0	1,456.1	978.0	821.3	1,152.5
TOTAL CO	(CORR 5% O2)	MG/NM3	115.5	117.0	221.7	309.8	521.3
TOTAL HC	(CORR 5% O2)	MG/NM3	23.1	33.0	63.3	96.7	146.2
PART MATTER	(CORR 5% O2)	MG/NM3	12.7	17.6	52.2	50.4	64.7
TOTAL NOX (AS NO2)	(CORR 5% O2)	PPM	1,070	709	476	400	561
TOTAL CO	(CORR 5% O2)	PPM	92	94	177	248	417
TOTAL HC	(CORR 5% O2)	PPM	43	62	118	180	273
TOTAL NOX (AS NO2)		G/HP-HR	3.95	2.70	1.98	1.79	2.42
TOTAL CO		G/HP-HR	0.24	0.25	0.51	0.73	1.23
TOTAL HC		G/HP-HR	0.06	0.08	0.17	0.27	0.42

PERFORMANCE DATA[DM8168]

June 8, 2016

PART MATTER	G/HP-HR	0.03	0.04	0.14	0.15	0.18
TOTAL NOX (AS NO2)	LB/HR	4.15	2.14	1.10	0.59	0.44
TOTAL CO	LB/HR	0.25	0.20	0.29	0.24	0.22
TOTAL HC	LB/HR	0.06	0.06	0.09	0.09	0.08
TOTAL CO2	LB/HR	496	387	297	189	112
PART MATTER	LB/HR	0.03	0.03	0.08	0.05	0.03
OXYGEN IN EXH	%	9.2	11.2	12.6	13.6	15.0
DRY SMOKE OPACITY	%	0.3	0.4	1.0	0.8	0.8
BOSCH SMOKE NUMBER		0.07	0.20	0.90	0.76	0.68

Regulatory Information

EPA TIER 3		2006 - 2010		
GASEOUS EMISSIONS DATA MEASUREMENTS PROVIDED TO THE EPA ARE CONSISTENT WITH THOSE DESCRIBED IN EPA 40 CFR PART 89 SUBPART D AND ISO 8178 FOR MEASURING HC, CO, PM, AND NOX. THE "MAX LIMITS" SHOWN BELOW ARE WEIGHTED CYCLE AVERAGES AND ARE IN COMPLIANCE WITH THE NON-ROAD REGULATIONS.				
Locality	**Agency**	**Regulation**	**Tier/Stage**	**Max Limits - G/BKW - HR**
U.S. (INCL CALIF)	EPA	NON-ROAD	TIER 3	CO: 3.5 NOx + HC: 4.0 PM: 0.20

EPA EMERGENCY STATIONARY		2011 -		
GASEOUS EMISSIONS DATA MEASUREMENTS PROVIDED TO THE EPA ARE CONSISTENT WITH THOSE DESCRIBED IN EPA 40 CFR PART 60 SUBPART IIII AND ISO 8178 FOR MEASURING HC, CO, PM, AND NOX. THE "MAX LIMITS" SHOWN BELOW ARE WEIGHTED CYCLE AVERAGES AND ARE IN COMPLIANCE WITH THE EMERGENCY STATIONARY REGULATIONS.				
Locality	**Agency**	**Regulation**	**Tier/Stage**	**Max Limits - G/BKW - HR**
U.S. (INCL CALIF)	EPA	STATIONARY	EMERGENCY STATIONARY	CO: 3.5 NOx + HC: 4.0 PM: 0.20

Altitude Derate Data

ALTITUDE CORRECTED POWER CAPABILITY (BHP)

AMBIENT OPERATING TEMP (F)	30	40	50	60	70	80	90	100	110	120	130	140	NORMAL
ALTITUDE (FT)													
0	480	480	480	480	480	477	474	465	452	433	412	395	478
1,000	480	480	480	480	477	475	470	457	441	422	402	386	476
2,000	480	480	479	477	474	470	463	446	427	410	392	376	473
3,000	480	478	475	470	463	457	449	434	418	403	386	370	464
4,000	475	469	463	456	450	444	436	422	407	391	374	358	453
5,000	462	456	449	442	436	430	422	408	393	377	360	343	442
6,000	449	442	435	428	422	416	408	394	379	362	346	329	430
7,000	434	428	421	414	408	402	394	379	364	348	332	315	418
8,000	420	413	406	400	394	387	380	365	350	334	318	302	406
9,000	405	398	392	385	379	373	365	350	335	320	305	289	394
10,000	390	384	377	371	365	359	352	337	322	307	293	278	382
11,000	376	369	363	357	351	345	339	334	320	305	291	277	370
12,000	361	355	348	342	337	331	326	320	315	303	288	270	357
13,000	347	340	334	329	323	318	312	307	302	290	274	257	345
14,000	332	326	321	315	310	304	299	294	289	276	261	246	333
15,000	319	313	307	302	297	291	286	282	278	263	249	235	322

Cross Reference

Engine Arrangement			
Arrangement Number	**Effective Serial Number**	**Engineering Model**	**Engineering Model Version**
2531644	S9L00001	GS279	-
3950369	S9P00001	GS279	-
4529865	S9P00001	GS857	LS

Test Specification Data						
Test Spec	**Setting**	**Effective Serial Number**	**Engine Arrangement**	**Governor Type**	**Default Low Idle Speed**	**Default High Idle Speed**
0K6616		S9L00001	2531644			
4150068	PP5547	S9P00001	3950369			
4150068	PP5547	S9P00001	4529865			

Performance Parameter Reference

Parameters Reference:DM9600-08
PERFORMANCE DEFINITIONS

PERFORMANCE DEFINITIONS DM9600

APPLICATION:
Engine performance tolerance values below are representative of a typical production engine tested in a calibrated dynamometer test

PERFORMANCE DATA[DM8168]

cell at SAE J1995 standard reference conditions. Caterpillar maintains ISO9001:2000 certified quality management systems for engine test Facilities to assure accurate calibration of test equipment. Engine test data is corrected in accordance with SAE J1995. Additional reference material SAE J1228, J1349, ISO 8665, 3046-1:2002E, 3046-3:1989, 1585, 2534, 2288, and 9249 may apply in part or are similar to SAE J1995. Special engine rating request (SERR) test data shall be noted.

PERFORMANCE PARAMETER TOLERANCE FACTORS:

Power	+/- 3%
Torque	+/- 3%
Exhaust stack temperature	+/- 8%
Inlet airflow	+/- 5%
Intake manifold pressure-gage	+/- 10%
Exhaust flow	+/- 6%
Specific fuel consumption	+/- 3%
Fuel rate	+/- 5%
Specific DEF consumption	+/- 3%
DEF rate	+/- 5%
Heat rejection	+/- 5%
Heat rejection exhaust only	+/- 10%
Heat rejection CEM only	+/- 10%

Heat Rejection values based on using treated water.

Torque is included for truck and Industrial applications, do not use for Gen Set or steady state applications.

On C7 - C18 engines, at speeds of 1100 RPM and under these values are provided for reference only, and may not meet the tolerance listed.

These values do not apply to C280/3600. For these models, see the tolerances listed below.

C280/3600 HEAT REJECTION TOLERANCE FACTORS:

Heat rejection	+/- 10%
Heat rejection to Atmosphere	+/- 50%
Heat rejection to Lube Oil	+/- 20%
Heat rejection to Aftercooler	+/- 5%

TEST CELL TRANSDUCER TOLERANCE FACTORS:

Torque	+/- 0.5%
Speed	+/- 0.2%
Fuel flow	+/- 1.0%
Temperature	+/- 2.0 C degrees
Intake manifold pressure	+/- 0.1 kPa

OBSERVED ENGINE PERFORMANCE IS CORRECTED TO SAE J1995 REFERENCE AIR AND FUEL CONDITIONS.

REFERENCE ATMOSPHERIC INLET AIR
FOR 3500 ENGINES AND SMALLER
SAE J1228 AUG2002 for marine engines, and J1995 JAN2014 for other engines, reference atmospheric pressure is 100 KPA (29.61 in hg), and standard temperature is 25deg C (77 deg F) at 30% relative humidity at the stated aftercooler water temp, or inlet manifold temp.

FOR 3600 ENGINES
Engine rating obtained and presented in accordance with ISO 3046/1 and SAE J1995 JANJAN2014 reference atmospheric pressure is 100 KPA (29.61 in hg), and standard temperature is 25deg C (77 deg F) at 30% relative humidity and 150M altitude at the stated aftercooler water temperature.

MEASUREMENT LOCATION FOR INLET AIR TEMPERATURE
Location for air temperature measurement air cleaner inlet at stabilized operating conditions.

PERFORMANCE DATA[DM8168]

REFERENCE EXHAUST STACK DIAMETER
The Reference Exhaust Stack Diameter published with this dataset is only used for the calculation of Smoke Opacity values displayed in this dataset. This value does not necessarily represent the actual stack diameter of the engine due to the variety of exhaust stack adapter options available. Consult the price list, engine order or general dimension drawings for the actual stack diameter size ordered or options available.

REFERENCE FUEL
DIESEL
Reference fuel is #2 distillate diesel with a 35API gravity;
A lower heating value is 42,780 KJ/KG (18,390 BTU/LB) when used at 29 (84.2), where the density is 836.9 G/Liter (7.001 Lbs/Gal).

GAS
Reference natural gas fuel has a lower heating value of 33.74 KJ/L (905 BTU/CU Ft). Low BTU ratings are based on 18.64 KJ/L (500 BTU/CU FT) lower heating value gas. Propane ratings are based on 87.56 KJ/L (2350 BTU/CU Ft) lower heating value gas.

ENGINE POWER (NET) IS THE CORRECTED FLYWHEEL POWER (GROSS) LESS EXTERNAL AUXILIARY LOAD
Engine corrected gross output includes the power required to drive standard equipment; lube oil, scavenge lube oil, fuel transfer, common rail fuel, separate circuit aftercooler and jacket water pumps. Engine net power available for the external (flywheel) load is calculated by subtracting the sum of auxiliary load from the corrected gross flywheel out put power. Typical auxiliary loads are radiator cooling fans, hydraulic pumps, air compressors and battery charging alternators. For Tier 4 ratings additional Parasitic losses would also include Intake, and Exhaust Restrictions.

ALTITUDE CAPABILITY
Altitude capability is the maximum altitude above sea level at standard temperature and standard pressure at which the engine could develop full rated output power on the current performance data set.

Standard temperature values versus altitude could be seen on TM2001.

When viewing the altitude capability chart the ambient temperature is the inlet air temp at the compressor inlet.

Engines with ADEM MEUI and HEUI fuel systems operating at conditions above the defined altitude capability derate for atmospheric pressure and temperature conditions outside the values defined, see TM2001.

Mechanical governor controlled unit injector engines require a setting change for operation at conditions above the altitude defined on the engine performance sheet. See your Caterpillar technical representative for non standard ratings.

REGULATIONS AND PRODUCT COMPLIANCE
TMI Emissions information is presented at 'nominal' and 'Potential Site Variation' values for standard ratings. No tolerances are applied to the emissions data. These values are subject to change at any time. The controlling federal and local emission requirements need to be verified by your Caterpillar technical representative.

Customer's may have special emission site requirements that need to be verified by the Caterpillar Product Group engineer.

EMISSIONS DEFINITIONS:
Emissions : DM1176

HEAT REJECTION DEFINITIONS:

PERFORMANCE DATA[DM8168]

Diesel Circuit Type and HHV Balance : DM9500

HIGH DISPLACEMENT (HD) DEFINITIONS:
3500: EM1500

RATING DEFINITIONS:
Agriculture : TM6008

Fire Pump : TM6009

Generator Set : TM6035

Generator (Gas) : TM6041

Industrial Diesel : TM6010

Industrial (Gas) : TM6040

Irrigation : TM5749

Locomotive : TM6037

Marine Auxiliary : TM6036

Marine Prop (Except 3600) : TM5747

Marine Prop (3600 only) : TM5748

MSHA : TM6042

Oil Field (Petroleum) : TM6011

Off-Highway Truck : TM6039

On-Highway Truck : TM6038

SOUND DEFINITIONS:
Sound Power : DM8702

Sound Pressure : TM7080

Date Released : 7/7/15

THOMPSON

Thompson Power

8

GENERATOR DATA

JUNE 08, 2016

For Help Desk Phone Numbers Click here

Selected Model

Engine: C9	**Generator Frame:** LC6114B	**Genset Rating (kW):** 300.0	**Line Voltage:** 480
Fuel: Diesel	**Generator Arrangement:** 4183863	**Genset Rating (kVA):** 375.0	**Phase Voltage:** 277
Frequency: 60	**Excitation Type:** Self Excited	**Pwr. Factor:** 0.8	**Rated Current:** 451.1
Duty: STANDBY	**Connection:** SERIES STAR	**Application:** EPG	**Status:** Current

Version: 41764 /40476 /41800 /10592

Spec Information

Generator Specification

Frame: LC6114B	**Type:** LC	**No. of Bearings:** 1
Winding Type: RANDOM WOUND		**Flywheel:** 14.0
Connection: SERIES STAR		**Housing:** 1
Phases: 3		**No. of Leads:** 12
Poles: 4		**Wires per Lead:** 2
Sync Speed: 1800		**Generator Pitch:** 0.6667

Generator Efficiency

Per Unit Load	kW	Efficiency %
0.25	75.0	89.5
0.5	150.0	92.7
0.75	225.0	93.7
1.0	300.0	93.7

Reactances	Per Unit	Ohms
SUBTRANSIENT - DIRECT AXIS X''_d	0.1156	0.0710
SUBTRANSIENT - QUADRATURE AXIS X''_q	0.1567	0.0963
TRANSIENT - SATURATED X'_d	0.1652	0.1015
SYNCHRONOUS - DIRECT AXIS X_d	2.8711	1.7640
SYNCHRONOUS - QUADRATURE AXIS X_q	1.7227	1.0584
NEGATIVE SEQUENCE X_2	0.1357	0.0834
ZERO SEQUENCE X_0	0.0081	0.0050

Time Constants	Seconds
OPEN CIRCUIT TRANSIENT - DIRECT AXIS T'_{d0}	1.7380
SHORT CIRCUIT TRANSIENT - DIRECT AXIS T'_d	0.1000
OPEN CIRCUIT SUBSTRANSIENT - DIRECT AXIS T''_{d0}	0.0130
SHORT CIRCUIT SUBSTRANSIENT - DIRECT AXIS T''_d	0.0100
OPEN CIRCUIT SUBSTRANSIENT - QUADRATURE AXIS T''_{q0}	0.1100
SHORT CIRCUIT SUBSTRANSIENT - QUADRATURE AXIS T''_q	0.0100
EXCITER TIME CONSTANT T_e	0.0300
ARMATURE SHORT CIRCUIT T_a	0.0150

Short Circuit Ratio: 0.44	Stator Resistance = 0.0163 Ohms	Field Resistance = 0.768 Ohms

Voltage Regulation

Voltage level adustment: +/-	5.0%
Voltage regulation, steady state: +/-	0.5%
Voltage regulation with 3% speed change: +/-	0.5%
Waveform deviation line - line, no load: less than	2.0%
Telephone influence factor: less than	50

Generator Excitation

	No Load	Full Load, (rated) pf	
		Series	**Parallel**
Excitation voltage:	10.2 Volts	41.75 Volts	Volts
Excitation current	1.0 Amps	3.37 Amps	Amps

Selected Model

Engine: C9	**Generator Frame:** LC6114B	**Genset Rating (kW):** 300.0	**Line Voltage:** 480
Fuel: Diesel	**Generator Arrangement:** 4183863	**Genset Rating (kVA):** 375.0	**Phase Voltage:** 277
Frequency: 60	**Excitation Type:** Self Excited	**Pwr. Factor:** 0.8	**Rated Current:** 451.1
Duty: STANDBY	**Connection:** SERIES STAR	**Application:** EPG	**Status:** Current

Version: 41764 /40476 /41800 /10592

Generator Mechanical Information

Center of Gravity

Dimension X	-431.0 mm	-17.0 IN.
Dimension Y	0.0 mm	0.0 IN.
Dimension Z	0.0 mm	0.0 IN.

- "X" is measured from driven end of generator and parallel to rotor. Towards engine fan is positive. See General Information for details
- "Y" is measured vertically from rotor center line. Up is positive.
- "Z" is measured to left and right of rotor center line. To the right is positive.

Generator WT = 996 kg * Rotor WT = 387 kg * Stator WT = 609 kg
2,196 LB 853 LB 1,343 LB

Rotor Balance = 0.0508 mm deflection PTP
Overspeed Capacity = 125% of synchronous speed

Generator Torsional Data

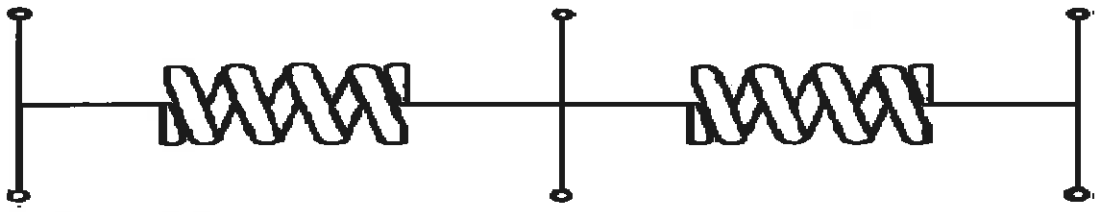

J1 = Coupling and Fan | **J2 = Rotor** | **J3 = Exciter End**

TOTAL J = J1 + J2 + J3

K1 = Shaft Stiffness between J1 + J2 (Diameter 1) | **K2 = Shaft Stiffness between J2 + J3 (Diameter 2)**

J1	K1	Min Shaft Dia 1	J2	K2	Min Shaft Dia 2	J3
17.1 LB IN. s^2	55.5 MLB IN./rad	4.5 IN.	35.4 LB IN. s^2	40.8 MLB IN./rad	4.3 IN.	1.5 LB IN. s^2
1.93 N m s^2	6.27 MN m/rad	115.0 mm	4.0 N m s^2	4.61 MN m/rad	110.0 mm	0.17 N m s^2

Total J
54.0 LB IN. s^2
6.1 N m s^2

Selected Model

Engine: C9	**Generator Frame:** LC6114B	**Genset Rating (kW):** 300.0	**Line Voltage:** 480
Fuel: Diesel	**Generator Arrangement:** 4183863	**Genset Rating (kVA):** 375.0	**Phase Voltage:** 277
Frequency: 60	**Excitation Type:** Self Excited	**Pwr. Factor:** 0.8	**Rated Current:** 451.1
Duty: STANDBY	**Connection:** SERIES STAR	**Application:** EPG	**Status:** Current

Version: 41764 /40476 /41800 /10592

Generator Cooling Requirements - Temperature - Insulation Data

Cooling Requirements:		**Temperature Data: (Ambient 40 ^{0}C)**	
Heat Dissipated:	20.2 kW	**Stator Rise:**	105.0 ^{0}C
Air Flow:	66.0 m^3/min	**Rotor Rise:**	105.0 ^{0}C

Insulation Class: H

Insulation Reg. as shipped: 100.0 MΩ minimum at 40 ^{0}C

Thermal Limits of Generator

Frequency:	60 Hz
Line to Line Voltage:	480 Volts
B BR 80/40	384.0 kVA
F BR -105/40	436.8 kVA
H BR - 125/40	480.0 kVA
F PR - 130/40	480.0 kVA
H PR - 150/40	508.8 kVA
H PR27 - 163/27	528.0 kVA

Selected Model

Engine: C9	**Generator Frame:** LC6114B	**Genset Rating (kW):** 300.0	**Line Voltage:** 480
Fuel: Diesel	**Generator Arrangement:** 4183863	**Genset Rating (kVA):** 375.0	**Phase Voltage:** 277
Frequency: 60	**Excitation Type:** Self Excited	**Pwr. Factor:** 0.8	**Rated Current:** 451.1
Duty: STANDBY	**Connection:** SERIES STAR	**Application:** EPG	**Status:** Current

Version: 41764 /40476 /41800 /10592

Starting Capability & Current Decrement

Motor Starting Capability (0.6 pf)

SKVA	Percent Volt Dip
53	2.5
108	5.0
166	7.5
228	10.0
293	12.5
362	15.0
435	17.5
513	20.0
596	22.5
684	25.0
779	27.5
880	30.0
988	32.5
1,105	35.0
1,232	37.5
1,369	40.0

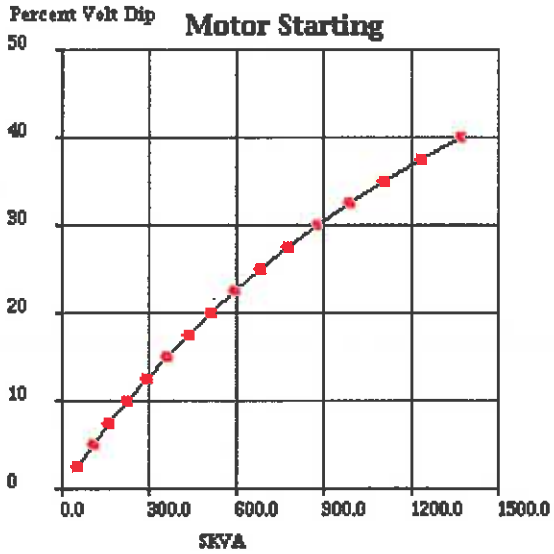

Current Decrement Data

E Time Cycle	AMP
0.0	3,877
1.0	2,556
2.0	2,035
3.0	1,705
4.0	1,444
5.0	1,223
7.5	803
10.0	520
12.5	329
15.0	217
20.0	121
25.0	88
30.0	75
35.0	70
40.0	68
45.0	67

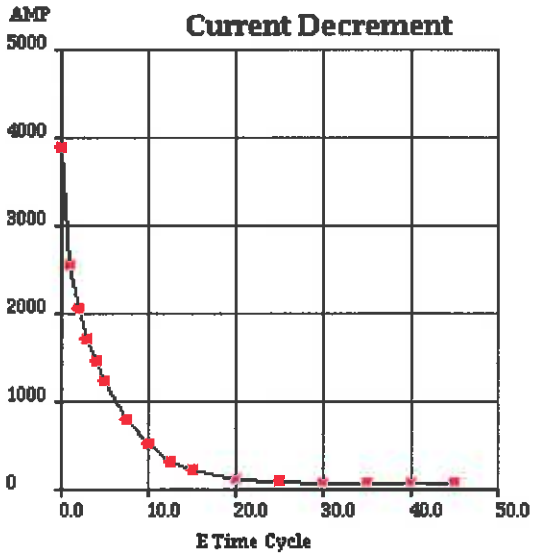

Instantaneous 3 Phase Fault Current: 3877 Amps **Instantaneous Line - Line Fault Current:** 3089 Amps

Instantaneous Line - Neutral Fault Current: 5181 Amps

Selected Model

Engine: C9	**Generator Frame:** LC6114B	**Genset Rating (kW):** 300.0	**Line Voltage:** 480
Fuel: Diesel	**Generator Arrangement:** 4183863	**Genset Rating (kVA):** 375.0	**Phase Voltage:** 277
Frequency: 60	**Excitation Type:** Self Excited	**Pwr. Factor:** 0.8	**Rated Current:** 451.1
Duty: STANDBY	**Connection:** SERIES STAR	**Application:** EPG	**Status:** Current

Version: 41764 /40476 /41800 /10592

Generator Output Characteristic Curves

Open Circuit Curve

Field Current	Line - Line Volt
0.0	0
9.4	288
11.1	336
13.0	384
15.5	432
19.6	480
27.3	528
44.2	576
84.2	624
181.6	672

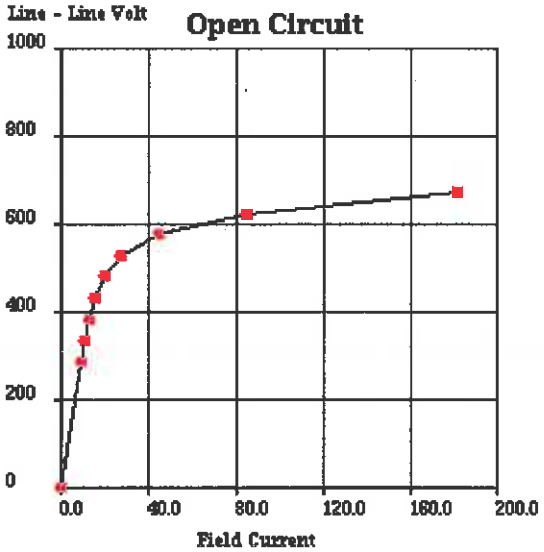

Short Circuit Curve

Field Current	Armature Current
0.0	0
26.6	271
31.0	316
35.5	361
39.9	406
44.3	451
48.8	496
53.2	541
57.6	586
62.1	631

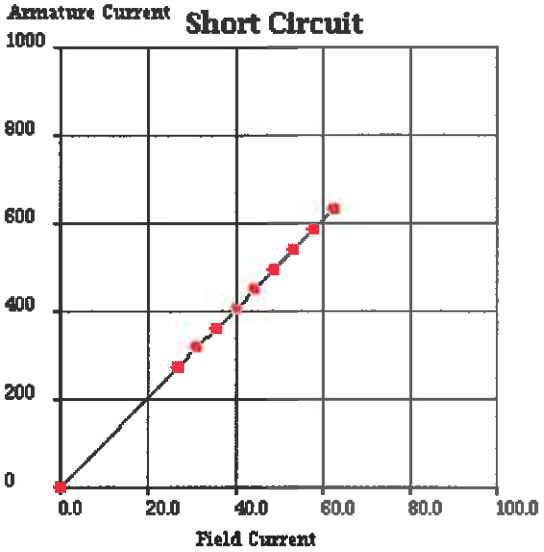

Selected Model

Engine: C9	**Generator Frame:** LC6114B	**Genset Rating (kW):** 300.0	**Line Voltage:** 480
Fuel: Diesel	**Generator Arrangement:** 4183863	**Genset Rating (kVA):** 375.0	**Phase Voltage:** 277
Frequency: 60	**Excitation Type:** Self Excited	**Pwr. Factor:** 0.8	**Rated Current:** 451.1
Duty: STANDBY	**Connection:** SERIES STAR	**Application:** EPG	**Status:** Current

Version: 41764 /40476 /41800 /10592

Generator Output Characteristic Curves

Zero Power Factor Curve

Field Current	Line - Line Volt
44.3	0
53.7	240
55.4	288
57.3	336
59.9	384
64.0	432
71.9	480
89.4	528
130.6	576
231.2	624

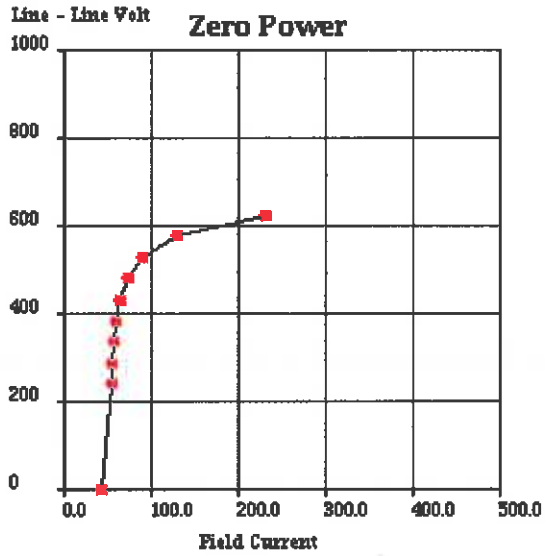

Air Gap Curve

Field Current	Line - Line Volt
0.0	0
9.3	288
10.8	336
12.3	384
13.9	432
15.4	480
17.0	528
18.5	576
20.1	624
21.6	672

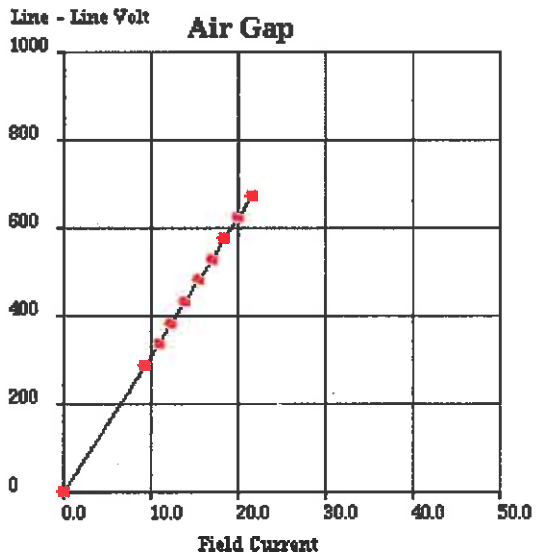

Selected Model

Engine: C9	**Generator Frame:** LC6114B	**Genset Rating (kW):** 300.0	**Line Voltage:** 480
Fuel: Diesel	**Generator Arrangement:** 4183863	**Genset Rating (kVA):** 375.0	**Phase Voltage:** 277
Frequency: 60	**Excitation Type:** Self Excited	**Pwr. Factor:** 0.8	**Rated Current:** 451.1
Duty: STANDBY	**Connection:** SERIES STAR	**Application:** EPG	**Status:** Current

Version: 41764 /40476 /41800 /10592

Reactive Capability Curve

Click to view Chart

Selected Model

Engine: C9	**Generator Frame:** LC6114B	**Genset Rating (kW):** 300.0	**Line Voltage:** 480
Fuel: Diesel	**Generator Arrangement:** 4183863	**Genset Rating (kVA):** 375.0	**Phase Voltage:** 277
Frequency: 60	**Excitation Type:** Self Excited	**Pwr. Factor:** 0.8	**Rated Current:** 451.1
Duty: STANDBY	**Connection:** SERIES STAR	**Application:** EPG	**Status:** Current

Version: 41764 /40476 /41800 /10592

General Information

GENERATOR INFORMATION (DM7900)

---

1. Motor Starting
Motor starting curves are obtained in accordance with IEC60034, and are displayed at 0.6 power factor.

2. Voltage Dip
Prediction of the generator synchronous voltage dip can be made by consulting the plot for the voltage dip value that corresponds to the desired motor starting kVA value.

3. Definitions
A) Generator Keys
Frame: abbreviation of generator frame size
Freq: frequency in hertz.
PP/SB: prime/standby duty respectively
Volts: line - line terminal voltage
kW: rating in electrical kilo watts
Model: engine sales model

B) Generator Temperature Rise
The indicated temperature rises are the IEC/NEMA limits for standby or prime power applications. The quoted rise figures are maximum limits only and are not necessarily indicative of the actual temperature rise of a given machine winding.

C) Centre of Gravity
The specified centre of gravity is for the generator only. For single bearing, and two bearing close coupled generators, the center of gravity is measured from the generator/engine flywheel-housing interface and from the centreline of the rotor Shaft.

For two bearing, standalone generators, the center of gravity is measured from the end of the rotor shaft and from the centerline of the rotor shaft.

D) Generator Current Decrement Curves
The generator current decrement curve indicates the generator armature current arising from a symmetrical three-phase fault at the generator terminals. Generators equipped with AREP or PMG excitation systems will sustain 300% of rated armature current for 10 seconds.

E) Generator Efficiency Curves
The efficiency curve is displayed for the generator only under the given conditions of rating, voltage, frequency and power factor. This is not the overall generating set efficiency curve.

Caterpillar Confidential: **Green**
Content Owner: Commercial Processes Division
Web Master(s): PSG Web Based Systems Support
Current Date: Wednesday, June 08, 2016 8:36:09 AM
© Caterpillar Inc. 2016 All Rights Reserved.
Data Privacy Statement.

THOMPSON

Thompson Power

9

EMCP 4

Image shown may not reflect actual package

EMCP 4.2 GENERATOR SET CONTROLLER

Caterpillar is leading the power generation market place with power solutions engineered to deliver unmatched performance, reliability, durability and cost-effectiveness.

FEATURES

GENERAL DESCRIPTION

The Cat® EMCP 4.2 offers fully featured power metering, protective relaying and engine and generator control and monitoring. Engine and generator controls, diagnostics, and operating information are accessible via the control panel keypads; diagnostics from the EMCP 4 optional modules can be viewed and reset through the EMCP 4.2.

FULL RANGE OF ATTACHMENTS

- Wide range of system expansion attachments, designed specifically to work with the EMCP 4.
- Flexible packaging options for easy and cost effective installation.

WORLD WIDE PRODUCT SUPPORT

- Cat dealers provide extensive pre and post sale support.
- Cat dealers have over 1,600 dealer branch stores operating in 200 countries.

FEATURES

- A 33 x 132 pixel, 3.8 inch, graphical display denotes text alarm/event descriptions, set points, engine and generator monitoring, and is visible in all lighting conditions.
- Textual display with support for 28 languages, including character languages such as Arabic, Chinese, and Japanese.
- Advanced engine monitoring is available on systems with an electronic engine control module.
- Integration with the Cat Digital Voltage Regulator (CDVR) provides enhanced system performance.
- Fully featured power metering, protective relaying, engine and generator parameter viewing, and expanded AC metering are all integrated into this controller.
- Real-time clock allows for date and time stamping of diagnostics and events in the control's logs as well as service maintenance reminders based on engine operating hours or calendar days.
- Up to 40 diagnostic events are stored in the non-volatile memory.
- Ability to view and reset diagnostics on EMCP 4 optional modules via the control panel removes the need for a separate service tool for troubleshooting.
- Set points and software stored in non-volatile memory, preventing loss during a power outage.
- Reduced power mode offers a low power state to minimize battery power requirements.
- Three levels of security allow for configurable operator privileges.
- Selectable units
  - Temperature: °C or °F
  - Pressure: psi, kPa, bar
  - Fuel Consumption: Gal/hr or Liter/hr

STANDARDS

- UL Recognized
- CSA C22.2 No.100,14, 94
- Complies with all necessary standards for CE Certification
  98/37/EC Machinery Directive
  – BS EN 60204-1 Safety of Machinery
  89/336/EEC EMC Directive
  – BS EN 50081-1 Emissions Standard
  – BS EN 50082-2 Immunity Standard
  73/23/EEC Low Voltage Directive
  – EN 50178 LVD Standard
- IEC529, IEC60034-5, IEC61131-3
- MIL STND 461

STANDARD FEATURES

Generator Monitoring	• Voltage (L-L, L-N) • Current (Phase) • Average Volt, Amp, Frequency • kW, kVAr, kVA (Average, Phase, %) • Power Factor (Average, Phase) • kW-hr, kVAr-hr (total) • Excitation voltage and current (with CDVR) • Generator stator and bearing temp (with optional module)
Generator Protection	• Generator phase sequence • Over/Under voltage (27/59) • Over/Under frequency (81 O/U) • Reverse Power (kW) (32) • Reverse Reactive Power (kVAr) (32RV) • Overcurrent (50/51)
Engine Monitoring	• Coolant temperature • Oil pressure • Engine speed (RPM) • Battery voltage • Run hours • Crank attempt and successful start counter • Enhanced engine monitoring (with electronic engines)
Engine Protection	• Control switch not in auto (alarm) • High coolant temp (alarm and shutdown) • Low coolant temp (alarm) • Low coolant level (alarm) • High engine oil temp (alarm and shutdown) • Low, high, and weak battery voltage • Overspeed • Overcrank • Low Oil Pressure
Control	• Run / Auto / Stop control • Speed and voltage adjust • Local and remote emergency stop • Remote start/stop • Cycle crank
Inputs & Outputs	• Two dedicated digital inputs • Six programmable digital inputs • Six programmable form A dry contacts • Two programmable form C dry contacts • Two digital outputs
Communications	• Primary and accessory CAN data links • RS-485 annunciator data link • Modbus RTU (RS-485 Half duplex)
Language Support	Arabic, Bulgarian, Chinese, Czech, Danish, Dutch, English, Estonian, Finnish, French, German, Greek, Hungarian, Icelandic, Italian, Latvian, Lithuanian, Japanese, Norwegian, Polish, Portuguese, Romanian, Russian, Slovak, Slovene, Spanish, Swedish, Turkish
Environmental	• Control module operating temperature: -40°C to 70°C • Display operating temperature: -20°C to 70°C • Humidity: 100% condensing 30°C to 60°C • Storage temperature: -40°C to 85°C • Vibration: Random profile, 24-1000 Hz, 4.3G rms

OPTIONAL MODULES

CAN ANNUNCIATOR

The EMCP 4 CAN Annunciator serves to display genset system alarm conditions and status indications. The annunciator has been designed for use on the accessory communication network and may be used in either local (package mounted) or remote (up to 800 feet) application. A maximum of three annunciators may be used with a single EMCP 4.2.

RS-485 ANNUNCIATOR

The EMCP 4 RS-485 Annunciator serves to display genset system alarm conditions and status indications. The annunciator has been designed for use on the long distance annunciator datalink and is used for remote (up to 4000 feet) application.

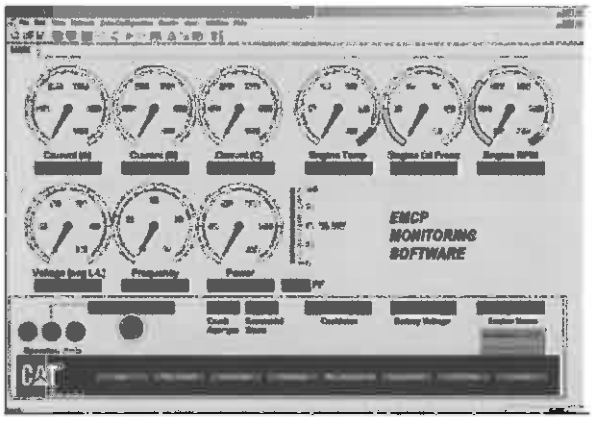

REMOTE MONITORING SOFTWARE

The EMCP 4 remote monitoring software package is a PC based program which allows the user to monitor and control a generator set, and is capable of running on a Windows based operating system. The remote monitoring software allows the user to configure data monitoring and data acquisition processes for monitoring, graphing, and logging of genset data.

THOMPSON

Thompson Power

10

Picture shown may not reflect actual configuration.
Shown with Optional Equipment.

EMCP 4

RS-485 Annunciator

The EMCP 4 RS-485 annunciator serves to display generator set system alarm conditions and status indications. The annunciator has been designed for use on the EMCP 4 RS-485 annunciator data link for remote applications, providing customers with enhanced site flexibility.

The EMCP 4 annunciator is configurable to the standards of NFPA 99/110 for emergency standby generator systems.

Features

- The EMCP 4 annunciator provides sixteen (16) individual points of annunciation, with two (2) LED's included for each point.
- An additional pair of LED's provides status indication of the RS-485 communication network.
- Includes alarm horn with lamp test and alarm acknowledge pushbuttons.
- Configurable to NFPA 99/110 requirements for local and remote annunciation on emergency standby generator systems.
- Provides custom label kit including software for customer's specific alarms and arrangement
- Designed and tested to meet stringent impulse shock and operating vibration requirements
- Uses high quality shielded twisted-triad cable for robust remote communications
- Graphic symbols are provided next to each pair to indicate various alarms and events
- The annunciator can be mounted remotely up to 1200 m (4,000 ft).
- Provides superior visibility of the LED's in direct sunlight.

Specifications

Technical Data

Electrical
- Battery Voltage Functional Range: 9 to 32 VDC
- Power Consumption
  - Maximum: _ 12 watt at 24 VDC
  - Standby: _ 5 watt at 24 VDC
  - Control Power: 12-24 VDC
- Communication: RS-485
- Single, 8-pin Connector
- Alarm
  - Sound Level 80 db

Physical

Weight	2.5 lb or _ 1.13 kg

Environmental

Operating Temperature	–40° C to 70° C –40° F to 158° F
Storage Temperature	–50° C to 70° C –58° F to 158° F
Relative Humidity	90%

Certifications

UL Recognized

LED Color Scheme

Each pair of LED's on the annunciator consists of two of three colors: green, yellow and red, which allows for custom configuration of status, warning and shutdown conditions.

The available colors and combinations are:

Row	LED 1	LED 2
1	Red	Yellow
2	Red	Yellow
3	Red	Yellow
4	Red	Yellow
5	Red	Yellow
6	Red	Green
7	Red	Yellow
8	Red	Yellow
9	Red	Yellow
10	Red	Yellow
11	Red	Yellow
12	Red	Yellow
13	Green	Yellow
14	Green	Yellow
15	Red	Green
16	Red	Yellow

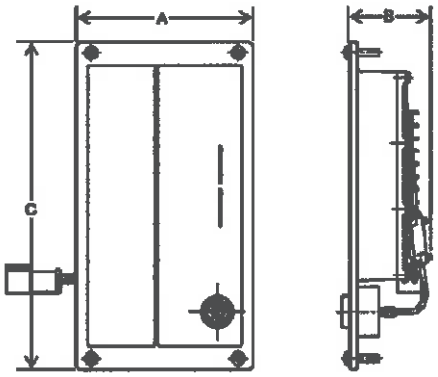

LED Color Scheme

- Emergency stop shutdown
- Overcrank shutdown
- Low coolant temperature warning
- High coolant temperature warning/shutdown
- Low oil pressure warning/shutdown
- Overspeed warning/shutdown
- Low coolant level warning/shutdown
- Low fuel level warning/shutdown
- EPS supplying load status
- Control switch not in auto warning
- High battery voltage warning/shutdown
- Low battery voltage warning/shutdown
- BATT charger AC failure warning/shutdown
- Low cranking voltage
- Engine running
- Tier 4 SCR

Annunciator Dimensions		
A	158 mm	6.22 in
B	60 mm	2.37 in
C	288 mm	11.34 in

Materials and specifications are subject to change without notice.
CAT, CATERPILLAR, their respective logos, "Caterpillar Yellow," the "Power Edge" trade dress as well as corporate and product identity used herein, are trademarks of Caterpillar and may not be used without permission.

©2016 Caterpillar
All rights reserved.

METRIC 471-1721

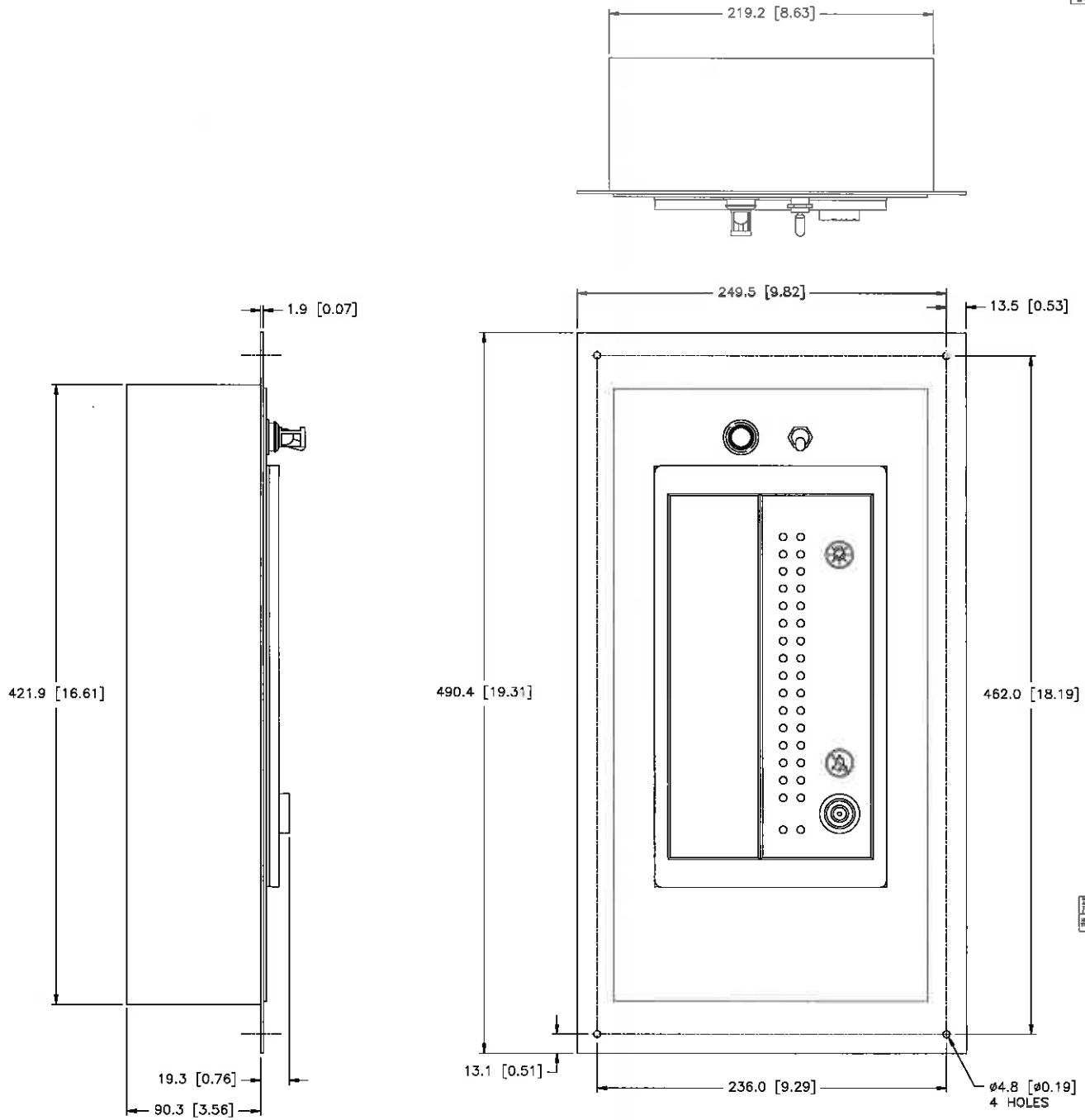

MODEL	TYPE	PRICING AR
C9	Y	373-9473 CHG 01
C15		
C18		
C27	6	
C32		

REV		
7		
6		
5		
4	1E2733	DRAWING - AUTOCAD
3	1E0011	INTPR & TOL
2		
1		
DRN	M.J. SWIFT	
CHK	M.J. SWIFT	
APPD	N.E. MOUNTJOY	
SCALE 1 = 1		
SHEET 1 OF 1		

CO 19SEP14

CATERPILLAR INC.

INSTALLATION-ATTACHMENT
REMOTE ANNUNCIATORS

471-1721 - E

THOMPSON

Thompson Power

11

ENGINE CONTROLLER

ADEM™ A4 Engine Controller

The ADEM™ A4 is the main Electronic Control Module (ECM) used on select diesel engines. The ADEM A4 provides a higher degree of control over a large number of combustion variables. The ADEM A4 is designed to control/interface Electronic Unit Injector (EUI) equipped engines. The ADEM A4 engine system is composed of the ADEM A4 ECM, control software, sensors, actuators, fuel injectors, and interface to the generator system. The prime benefit of an ADEM A4 engine system is to better control and maintain the particulate emissions, both steady state and transient, while improving engine performance

FEATURES

RELIABLE, DURABLE

All ADEM A4 controllers are designed to survive the harshest environments.

- Environmentally sealed, die-cast aluminum housing isolates and protects electronic components from moisture and dirt contamination.
- Rigorous vibration testing ensures product reliability and durability.
- Accuracy maintained from −40° C to 85° C
- Electrical noise immunity to 100 volts/meter
- Internal circuits are designed to withstand shorts to +battery and −battery.

SIMPLE SERVICING

Each ADEM A4 system works in combination with the Cat® ET service tool software to keep the engine operating at peak performance.

- Displays measured parameters
- Retrieves active and logged event code documenting abnormal system operation
- Performs calibrations and diagnostic tests
- Supports flash programming of new software into the ADEM A4 ECM

SELF DIAGNOSTICS

Each ADEM A4 ECM has a full compliment of diagnostics. The ECM can detect faults in the electrical system and report those faults to the service technician for quick repair.

- Self-diagnostic capability pinpoints operational problems in need of attention.

ADVANCED FEATURES

- Enhanced performance from fuel injection timing and limiting
- Adjustable monitoring of vital engine parameters
- Programmable speed acceleration ramp rate
- Data link interfaces

ENGINE CONTROLLER

DESCRIPTION

The ECM is housed in an environmentally sealed casting. All wiring connections to the ECM are made using two sealed connectors: a single seventy-pin connector and a single one hundred twenty-pin connector.

ENGINE SPEED GOVERNING

Desired engine speed is calculated by the ECM and held within ±0.2 Hz for isochronous and droop mode. The ECM accounts for droop that is requested. The proper amount of fuel is sent to the injectors due to these calculations. The ECM also employs cooldown/shutdown strategies, acceleration delays on startup, acceleration ramp times and speed reference.

FUEL LIMITING

Warm and cold fuel-air ratio control limits are controlled by the ECM. Electronic monitoring system derates, torque limit, and cranking limit, programmable torque scaling, and cold cylinder cutout mode are standard features.

FUEL INJECTION TIMING

Master timing for injection is controlled by the ECM control. Temperature dependencies are accounted for in the fuel injection calculations.

ELECTRONIC MONITORING

Electronic monitoring of vital engine parameters can be programmed. Warning, derate, and shutdown event conditions may be customized by the user.

INFORMATION MANAGEMENT

The ECM stores information to assist with electronic troubleshooting. Active and logged diagnostic codes, active events, logged events, fuel consumption, engine hours, and instantaneous totals aid service technicians when diagnosing electronic faults and scheduling preventive maintenance.

CALIBRATIONS

Engine performance is optimized through injection timing. Auto/manual sensor calibrations are standard features.

ON-BOARD SYSTEM TESTS

System tests are available to assist in electronic troubleshooting. These tests include: injector activation, injector cutout, and override of control outputs.

DATA LINK INTERFACES

The ADEM A4 communicates with the EMCP via a dedicated communication network.

ELECTRONIC SENSING

The following sensing is available on the ADEM A4: oil pressure, fuel pressure, fuel temperature, atmospheric pressure, air inlet temperature, turbo outlet pressure, engine coolant temperature, engine speed, throttle, position, exhaust temperature, oil filter pressure differential, fuel filter pressure differential, air filter pressure differential and crankcase pressure.

ENGINE CONTROLLER

SPECIFICATIONS

Impervious to:
salt spray, fuel, oil and oil additives, coolant, spray cleaners, chlorinated solvents, hydrogen sulfide and methane gas, and dust

Input and output protection
all inputs and outputs are protected against short circuits to +battery and −battery

Input voltage range (24 VDC nominal)
18 to 32 VDC

Mounting
engine mounted

Reverse polarity protected

Shock, withstands 20 g

Temperature range
Operating: −40° C to 85° C (−40° F to 185° F)
Storage: −50° C to 120° C (−58° F to 248° F)

Vibration
withstands 8.0 g @ 24 to 2 kHz

This page is intentionally left blank

Materials and specifications are subject to change without notice.
CAT, CATERPILLAR, their respective logos, "Caterpillar Yellow," the "Power Edge" trade dress as well as corporate and product identity used herein, are trademarks of Caterpillar and may not be used without permission.

LEHE5347-01 (08/13)

© 2013 Caterpillar
All Rights Reserved.
Printed in U.S.A.

THOMPSON

Thompson Power

12

INTEGRATED VOLTAGE REGULATOR

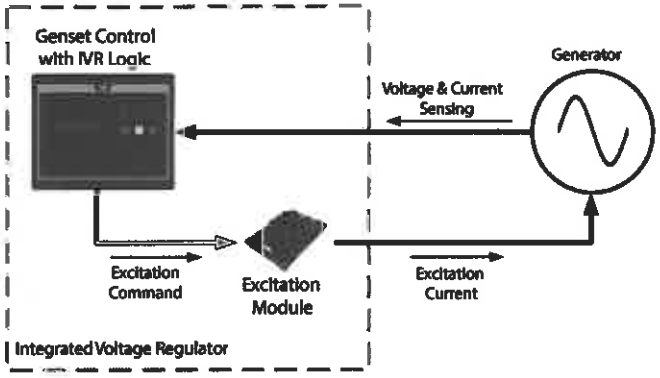

INTEGRATED VOLTAGE REGULATOR

The Integrated Voltage Regulator (IVR) is designed to provide robust, precise closed-loop control of the generator voltage, optimized transient performance and industry leading feature specification.

Caterpillar is leading the power generation marketplace with power solutions engineered to deliver unmatched flexibility, expandability, reliability and cost-effectiveness.

FEATURES

When used with an Excitation Module, EMCP 4.3/4.4 and IVR-compatible EMCP 4.1/4.2 controllers offer:

- Automatic Voltage Regulation (AVR)
- Programmable stability settings
- Soft start control with an adjustable time setting in AVR control mode
- **Dual Slope, Configurable Under Frequency (Volts/Hz)** regulation
- Three-phase or single-phase generator voltage (RMS) sensing/regulation in AVR mode
- Setpoint adjustment from the EMCP display or Cat® ET ServiceTool
- IVR Operating Status and Voltage Bias Overview screens to provide an enhanced level of user interface
- Integrated Voltage Regulator event monitoring

EMCP 4.3/4.4 and IVR-compatible EMCP 4.2 controllers also offer:

- Power Factor Regulation (PF)
- Reactive Droop compensation
- Line drop compensation

WORLDWIDE PRODUCT SUPPORT

- Worldwide parts availability through the Cat dealer network
- Over 1,800 dealer branch stores operating in 200 countries
- The best product support record in the industry
- Cat dealers provide extensive post sale support including maintenance and repair agreements

COMPLETE SYSTEM INTEGRATION

Fully designed and factory tested to work seamlessly with Cat generators using Self Excitation (SE), Internal Excitation (IE) or Permanent Magnet (PMG) excitation systems and EMCP controls.

INTEGRATED VOLTAGE REGULATOR

INTEGRATED VOLTAGE REGULATOR FEATURE SPECIFICATION

	EMCP 4.1	EMCP 4.2	EMCP 4.3	EMCP 4.4
SPECIFICATIONS				
No Load to Full Load Regulation	±0.5%	±0.25%	±0.25%	±0.25%
Configurable Volts / Hz Characteristic	•	•	•	•
Configurable Knee Frequency	•	•	•	•
Regulator ResponseTime	10 ms	10 ms	5 ms	5 ms
Single andThree Phase Sensing	•	•	•	•
Voltage Adjustment Range **(Configurable up to)**	± 30%	± 30%	± 30%	± 30%
CONTROL				
Dual Slope Configurable Volts / Hz Characteristic	•	•	•	•
Excitation Enable / Disable Selection	•	•	•	•
Line Loss (I^2R) Compensation	–	•	•	•
Reactive Droop Compensation	–	•	•	•
Power Factor Control Mode	–	•	•	•
PROTECTION / ALARMS				
Generator Overvoltage	•	•	•	•
Generator Undervoltage	•	•	•	•
Over Excitation	•	•	•	•
Loss of Sensing	•	•	•	•
Generator Reverse VARs	–	•	•	•
Event Log	•	•	•	•
METERING				
EMCP AC Metering	•	•	•	•
EMCP Power Metering	–	•	•	•
Excitation Command Percentage	•	•	•	•
Operating Mode Status Indication	•	•	•	•

INTEGRATED VOLTAGE REGULATOR

INTEGRATED VOLTAGE REGULATOR FEATURE SPECIFICATION (continued)

	EMCP 4.1	EMCP 4.2	EMCP 4.3	EMCP 4.4
VOLTAGE ADJUSTMENT				
EMCP 4 Display Voltage Bias	•	•	•	•
Digital Input (Raise / Lower) Voltage Bias[1]	•	•	•	•
Potentiometer Voltage Bias[1]	•	•	•	•
Analog Voltage Bias – Voltage Range[1]	0V to 5V	0V to 5V	-10V to +10V	-10V to +10V
Analog Voltage Bias – Current Range[1]	–	–	0mA to 20mA	0mA to 20mA
Analog Voltage Bias – PWM Range[1]	–	–	0% to 100%	0% to 100%
SCADA (Modbus) Voltage Bias	–	•	•	•

[1]Requires an available input on the EMCP 4.

INTEGRATED VOLTAGE REGULATOR

EXCITATION MODULE SPECIFICATION

The Integrated Voltage Regulator consists of an EMCP 4 interfacing with an Excitation Module. There are a range of Excitation Modules available to match Cat generator sets.

Figure 1:
EM10 Excitation Module

Figure 2:
EM15 Excitation Module

EXCITATION MODULE TECHNICAL SPECIFICATION

	EM10	EM15
Compatible Generator Excitation Types	Self Excitation (SE) Internal Excitation (IE) Permanent Magnet (PMG)	
Nominal Field Current Output	6 Amps	7 Amps
Maximum (forcing) Field Current Output	10 Amps	15 Amps
Maximum AC Voltage Input	180 Vrms	240 Vrms

For more information on the Excitation Module refer to the component spec sheet.

INTEGRATED VOLTAGE REGULATOR

EMCP 4 DISPLAY

EXAMPLE SCREENS – EMCP 4.1/4.2

Figure 3: IVR Overview Screen

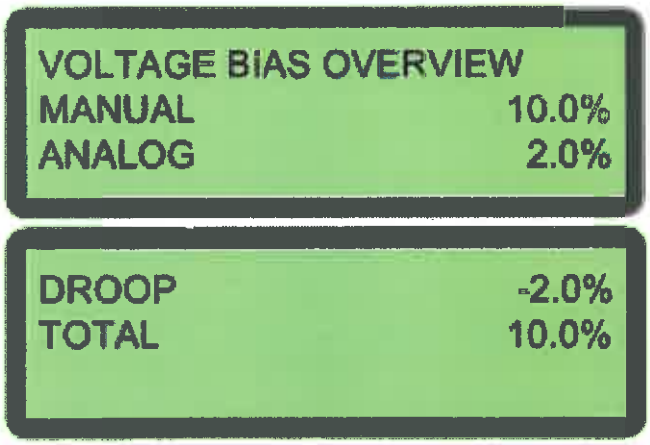

Figure 4: Voltage Bias Overview Screens

EXAMPLE SCREENS – EMCP 4.3/4.4

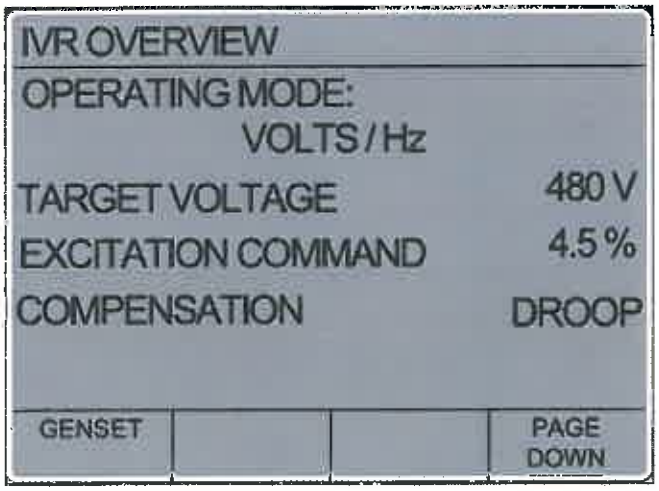

Figure 5: IVR Overview Screen

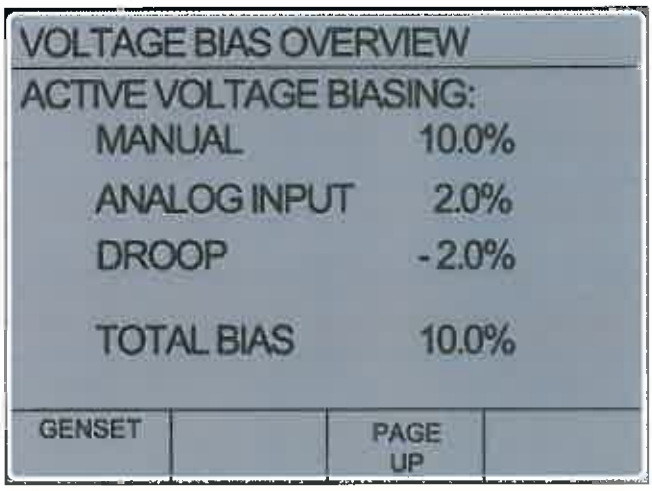

Figure 6: Voltage Bias Overview Screen

www.Cat-Electric Power.com
©2013 Caterpillar
All rights reserved

Materials and specifications are subject to change without notice.
The International System of Units (SI) is used in this publication.

CAT, CATERPILLAR, their respective logos, "Caterpillar Yellow", the "Power Edge" trade dress, as well as corporate and product identity used herein, are trademarks of Caterpillar and may not be used without permission.

LEHE0448-00 (08/13)

THOMPSON

Thompson Power

13

C9 ACERT™, C13 ACERT, C15 ACERT, C18 ACERT Circuit Breakers

Manually Operated Circuit Breakers

Current (A)	Frame	Number of Poles	Interrupting Ratings (kA rms)			Trip Units	(Lugs) Cable Size Range / Phase	Auxiliary Options
			240V	480V	600V			
250	T4N	3	65	25	18	Electronic LS/I (S or I) or LSI	(1) 6 AWG – 350 kcmil	1 Form C + 1 Bell Alarm 250VAC/VDC Shunt Trip 24VDC
400	T5N	3	65	25	18		(2) 3/0 – 250 kcmil	
600	T6N	3	65	35	20		(3) 2/0 – 400 kcmil	
800	T6N	3	65	35	20		(3) 2/0 – 400 kcmil	1 Form C + 1 Bell Alarm 400VAC / 250VDC Shunt Trip 24VDC
1200	T7S	3	65	50	25		(4) 4/0 – 500 kcmil	
1600	R	3	65	35	18	Electronic LSI	BUS BAR	Form C (1NO + 1NC) Shunt Trip 24VDC
2000	R	3	65	35	18		BUS BAR	
2500	R	3	65	35	18		BUS BAR	

Electrically Operated Circuit Breakers

Current (A)	Frame	Number of Poles	Interrupting Ratings (kA rms)			Trip Units	(Lugs) Cable Size Range / Phase	Auxiliary Options
			240V	480V	600V			
800	T7M-S	3	65	50	25	Electronic LSI	(4) 4/0 – 500 kcmil	2 Form C + 1 Bell Alarm 24VDC
1200	T7M-S	3	65	50	25		(4) 4/0 – 500 kcmil	2 Form C + 1 Bell Alarm 24VDC

Single Breaker Options (250 – 2500A)

Model	Current (A)	Operation
C9 ACERT™	250	Manually Operated
C9 ACERT	400	Manually Operated
C9 ACERT, C13 ACERT, C15 ACERT, C18 ACERT	600	Manually Operated
C9 ACERT, C13 ACERT, C15 ACERT, C18 ACERT	800	Manually Operated or Electrically Operated
C9 ACERT, C13 ACERT, C15 ACERT, C18 ACERT	1200	Manually Operated or Electrically Operated
C13 ACERT, C15 ACERT, C18 ACERT	1600	Manually Operated
C15 ACERT, C18 ACERT	2000	Manually Operated
C18 ACERT	2500	Manually Operated

Multiple Breaker Options

	Main Breaker Box		Auxiliary Box
	1st Breaker (Amps)	2nd Breaker (Amps)	Breaker (Amps)
Model	Manually Operated	Manually Operated	Manually Operated
C9 ACERT, C13 ACERT, C15 ACERT, C18 ACERT	250 ✓	✓ 250, 400, 600, 800, or 1200	3rd Breaker: 250 or 400 (Not available if 1st & 2nd Breaker = 1200A)
C9 ACERT, C13 ACERT, C15 ACERT, C18 ACERT	400		
C9 ACERT, C13 ACERT, C15 ACERT, C18 ACERT	600		
C9 ACERT, C13 ACERT, C15 ACERT, C18 ACERT	800		
C9 ACERT, C13 ACERT, C15 ACERT, C18 ACERT	1200		
C13 ACERT, C15 ACERT, C18 ACERT	1600	Not Available	2nd Breaker: 250 or 400
C15 ACERT, C18 ACERT	2000		
C18 ACERT	2500		

www.Cat-ElectricPower.com
©2016 Caterpillar
All rights reserved.

Materials and specifications are subject to change without notice. CAT, CATERPILLAR, their respective logos, "Caterpillar Yellow", the "Power Edge" trade dress as well as corporate and product identity used herein, are trademarks of Caterpillar and may not be used without permission.

THOMPSON

Thompson Power

14

Circuit Breakers

Picture shown may not represent actual package

Molded Case Circuit Breakers: 30A – 1200A

40kW – 600kW Gensets

Features

- 100% UL Listing
- Thermal Magnetic Trip Units (Frames T1N and T3N)
- Electronic Trip Units (Frames T4N, T5N, T6N & T7S/T7M-S)
- Double insulation
- Clear indication of breaker status
- Can be used in normal operation in an ambient of −25° C and +70° C
- Auxiliary contacts available
- Insulating case constructed from fiberglass reinforced synthetic resin
- Anti-corrosion treatment on all metal parts
- Optional Dual Circuit Breakers

Conformity with International Standards

The T1N through T6N and T7S/T7M-S Frame Circuit Breakers have been designed to comply with these major standards:

- UL 489
- CSA22.2 No.5
- IEC 60947-2

Circuit Breakers

Manually Operated Circuit Breakers

Current (A)	Frame	Number of Poles	Interrupting Ratings (kA rms)			Trip Units
			240V	480V	600V	
30	T1N	3	50	22	10	Thermal Magnetic
40	T1N	3	50	22	10	
50	T1N	3	50	22	10	
60	T1N	3	50	22	10	
70	T1N	3	50	22	10	
80	T1N	3	50	22	10	
90	T1N	3	50	22	10	
100	T1N	3	50	22	10	
125	T3N	3	50	25	10	
150	T3N	3	50	25	10	
175	T3N	3	50	25	10	
200	T3N	3	50	25	10	
225	T3N	3	50	25	10	
250	T4N	3	65	25	18	Electronic LS/I (S or I)
400	T5N	3	65	25	18	
600	T6N	3	65	35	20	
800	T6N	3	65	35	20	
1200	T7S	3	65	50	25	

Electrically Operated Circuit Breakers

Current (A)	Frame	Number of Poles	Interrupting Ratings (kA rms)			Trip Units
			240V	480V	600V	
800	T6N	3	65	35	20	Electronic LSI
1200	T7M-S	3	65	50	25	

Electronic LS/I Trip Units offer LS or LI Protection

L-I Mode

- Long Time / Overload Protection, "L" has an adjustable trip threshold and adjustable time delay
- Instantaneous Short Circuit Protection, "I" has an adjustable short circuit trip threshold and once exceeded will cause the circuit breaker to trip instantaneously

L-S Mode

- Long Time / Overload Protection, "L" has an adjustable trip threshold and adjustable time delay
- Short Circuit Protection, "S" has an adjustable short circuit trip threshold and adjustable time delay if necessary for coordinating with downstream loads
- Instantaneous Short Circuit Protection, "I" is still included, but the threshold level is not adjustable and exists at a predetermined level

T1 100 - TMF

In = 15 ÷ 70 A

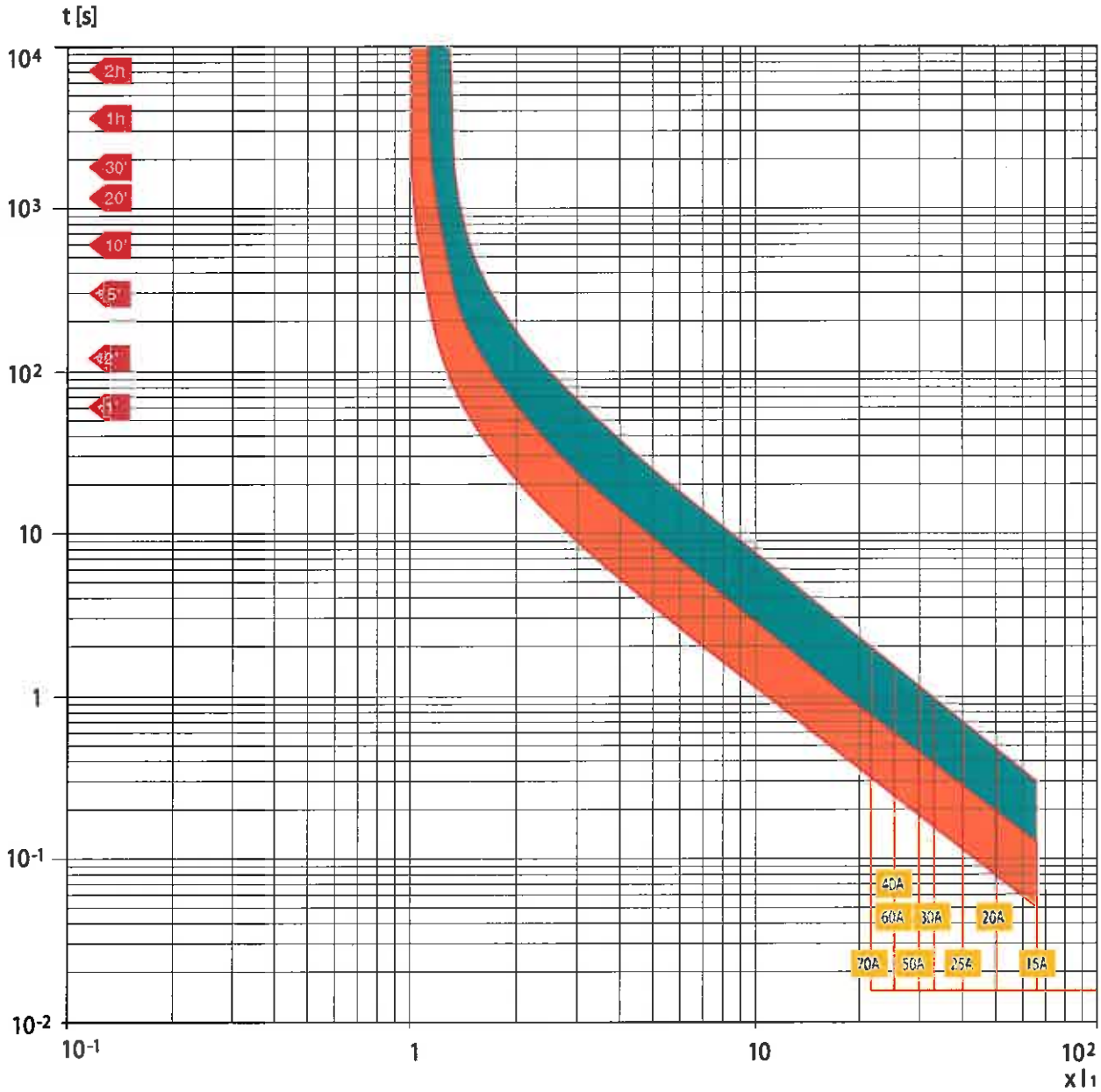

T1 100 - TMF

In = 80 ÷ 100 A

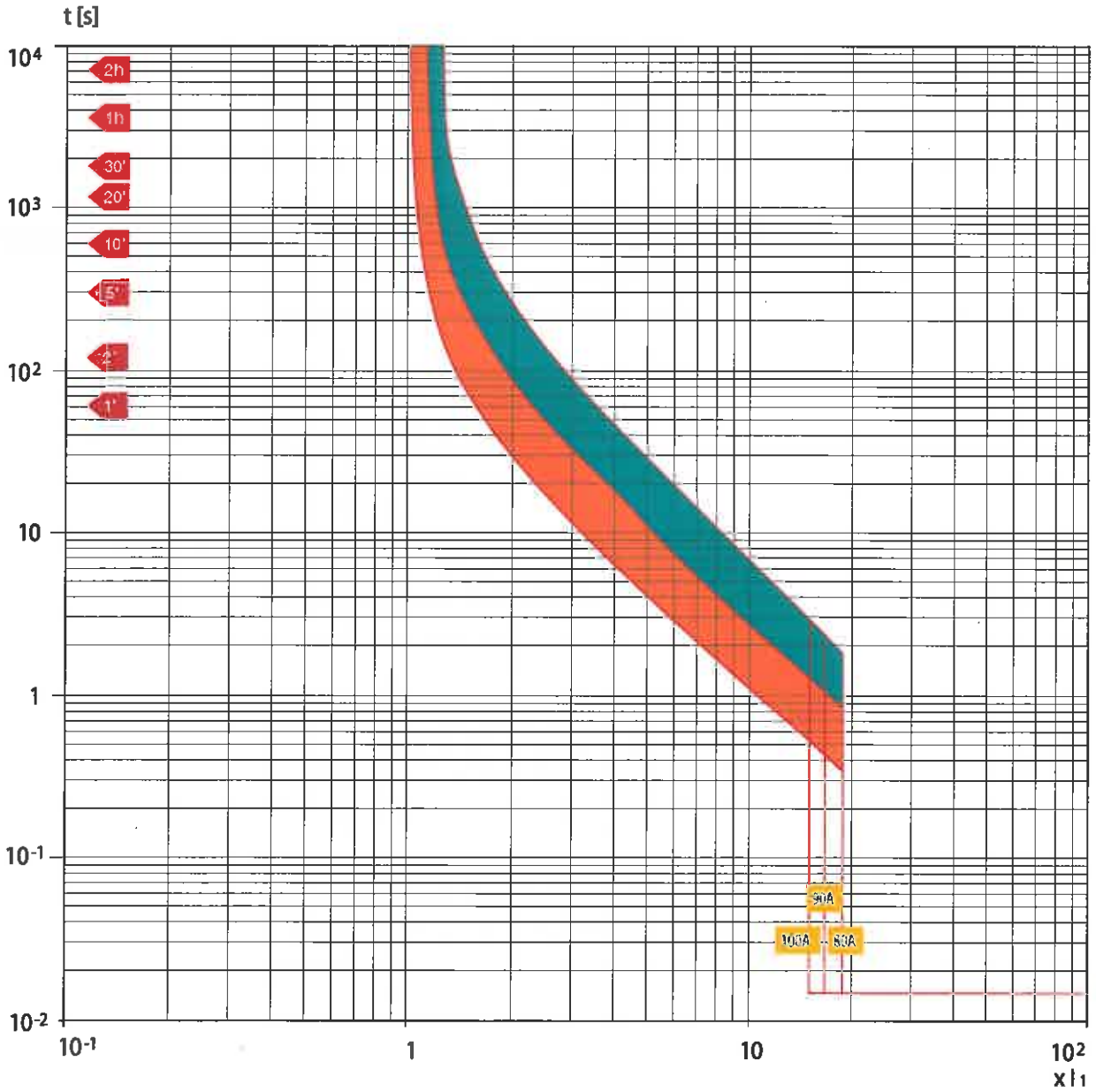

T3 225 – TMF

In = 125 ÷ 225 A

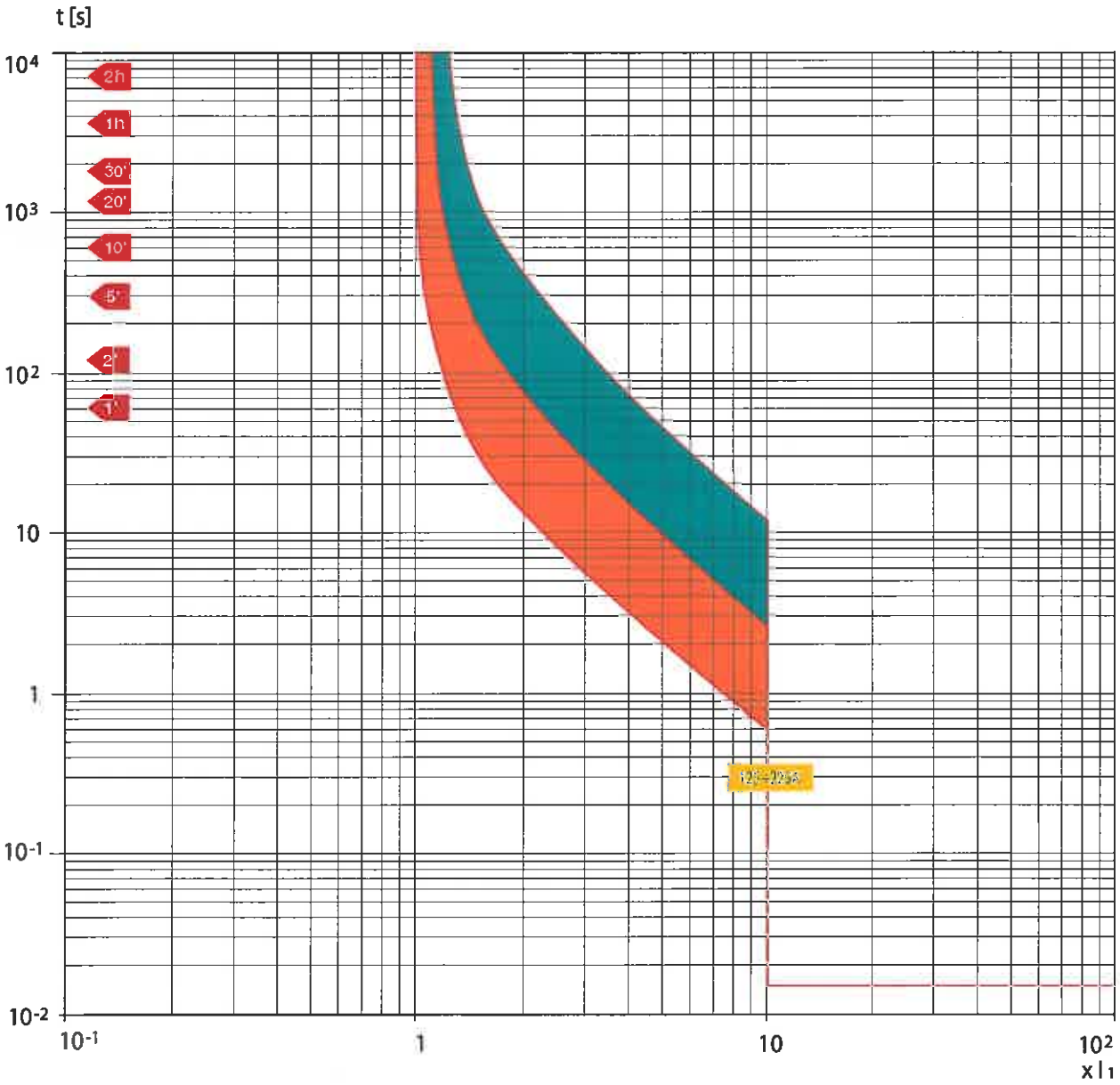

T4 250 / T5 400 - PR221DS

L-I Functions

Note: For T5 In = 600 A ☒ I_3max = 9.5 x In

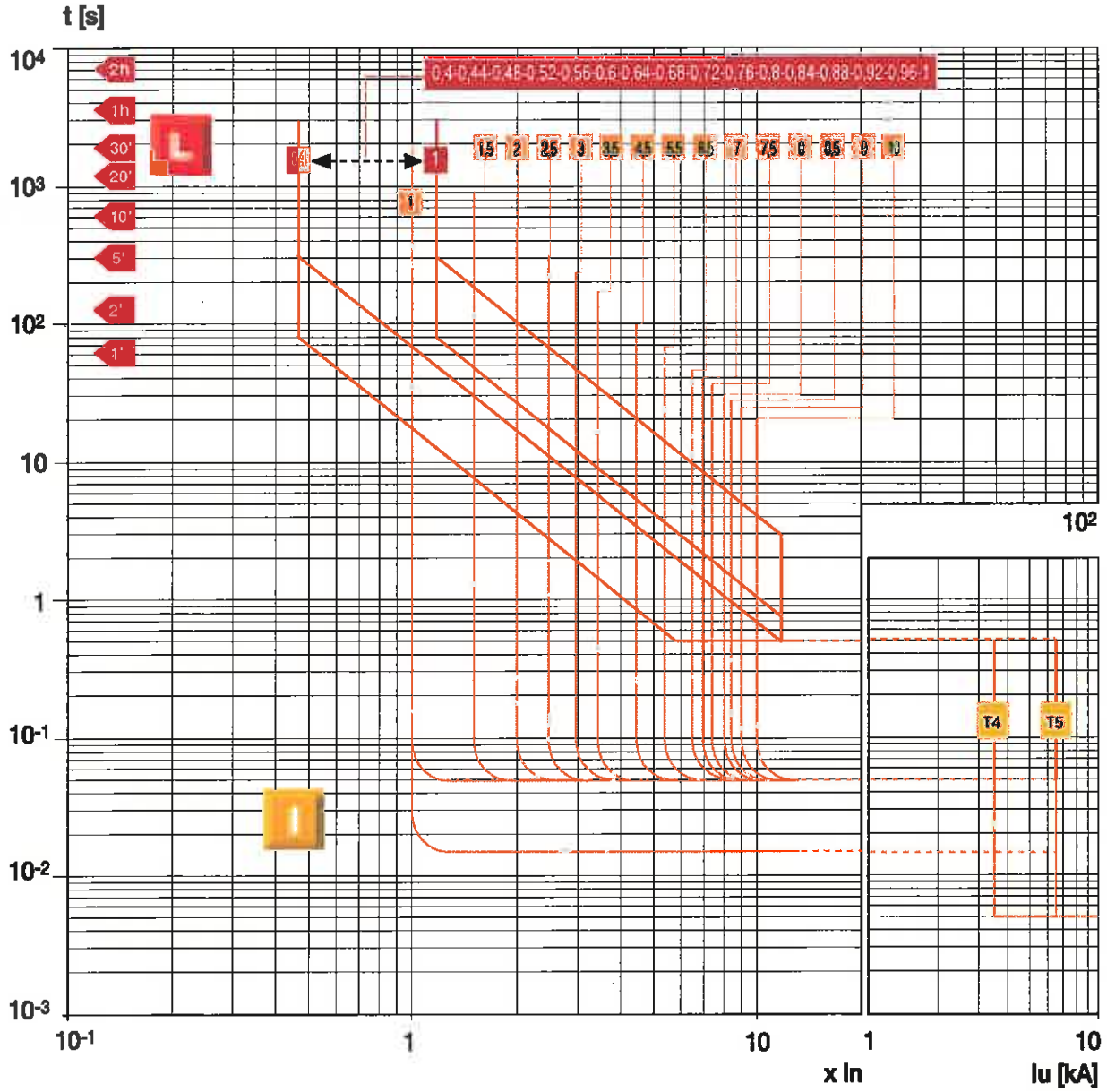

T4 250 / T5 400 - PR221DS

L-S Functions

Note: For T5 In = 600 A ☒ I_2max = 9.5 x In

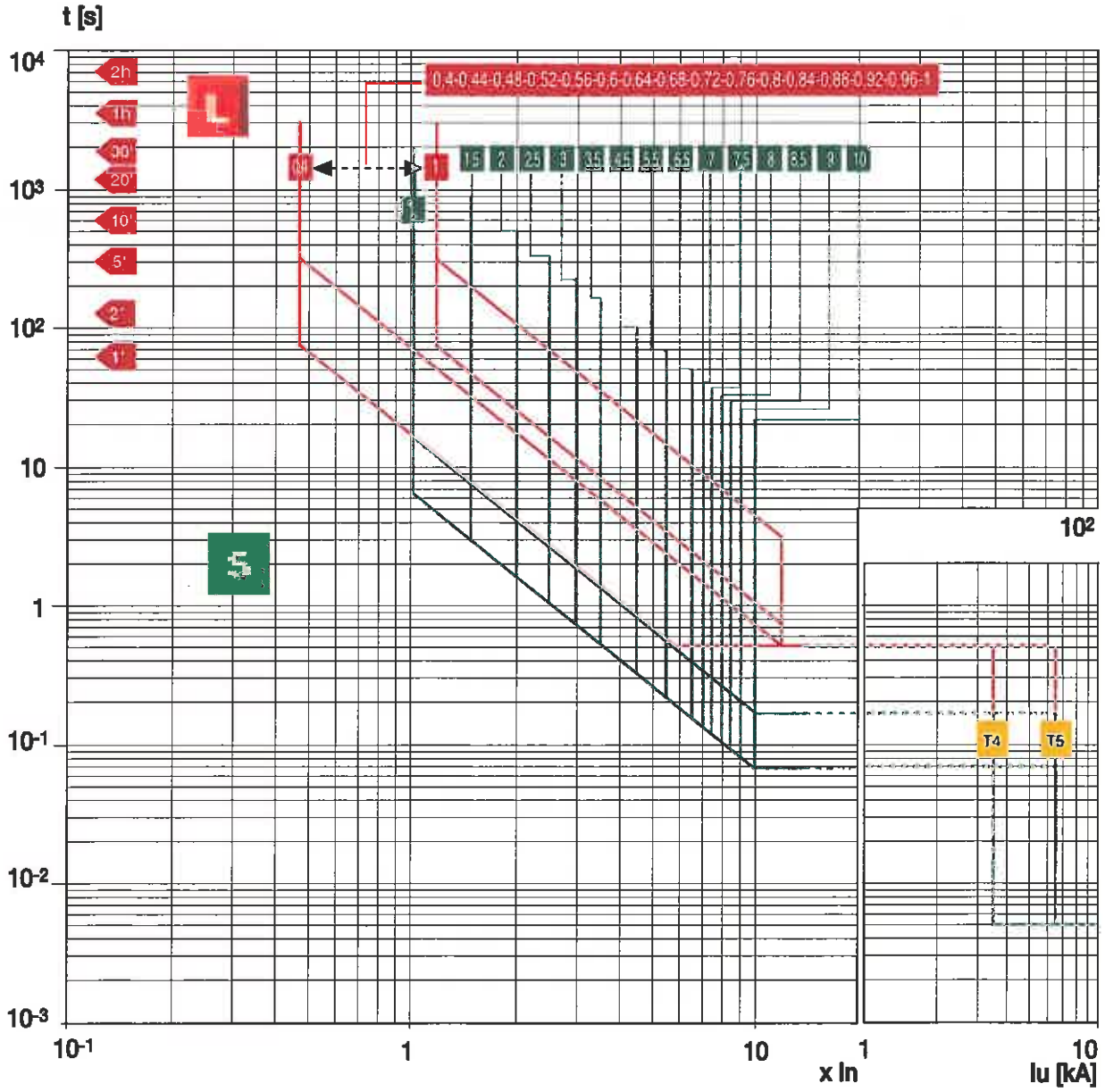

T6 600 / 800 – PR221DS

L-I Functions

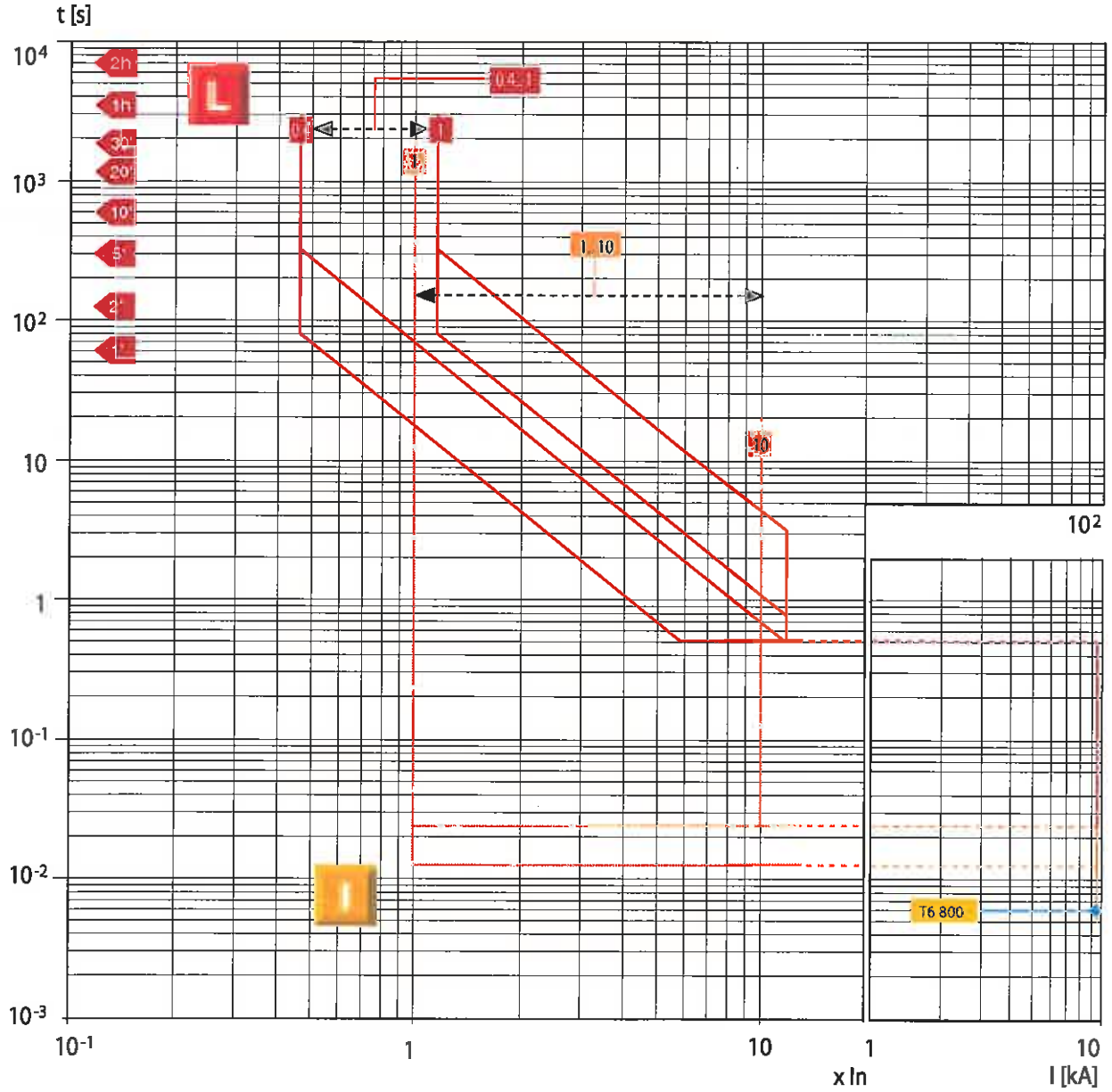

T6 600 / 800 – PR221DS

L-S Functions

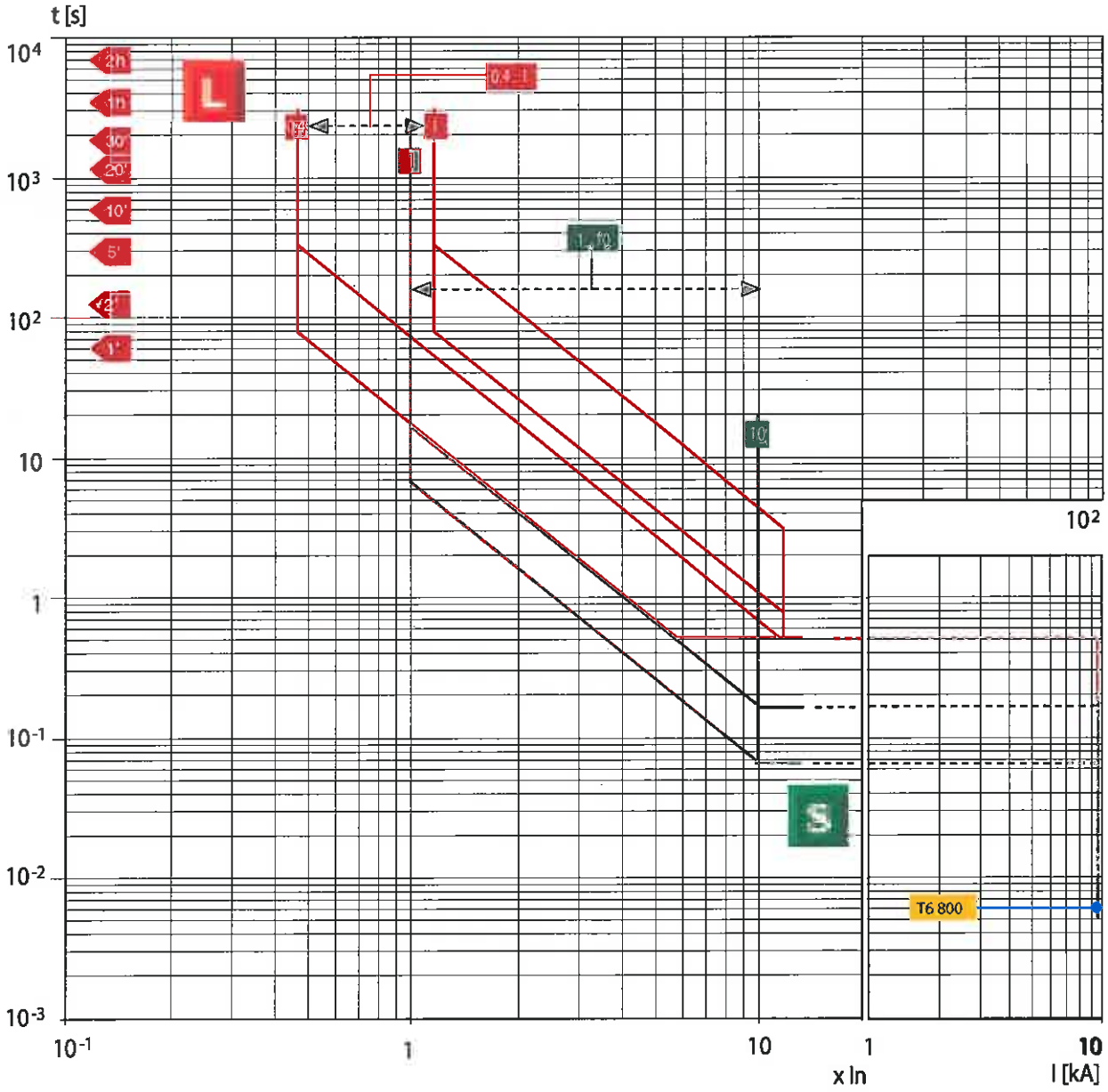

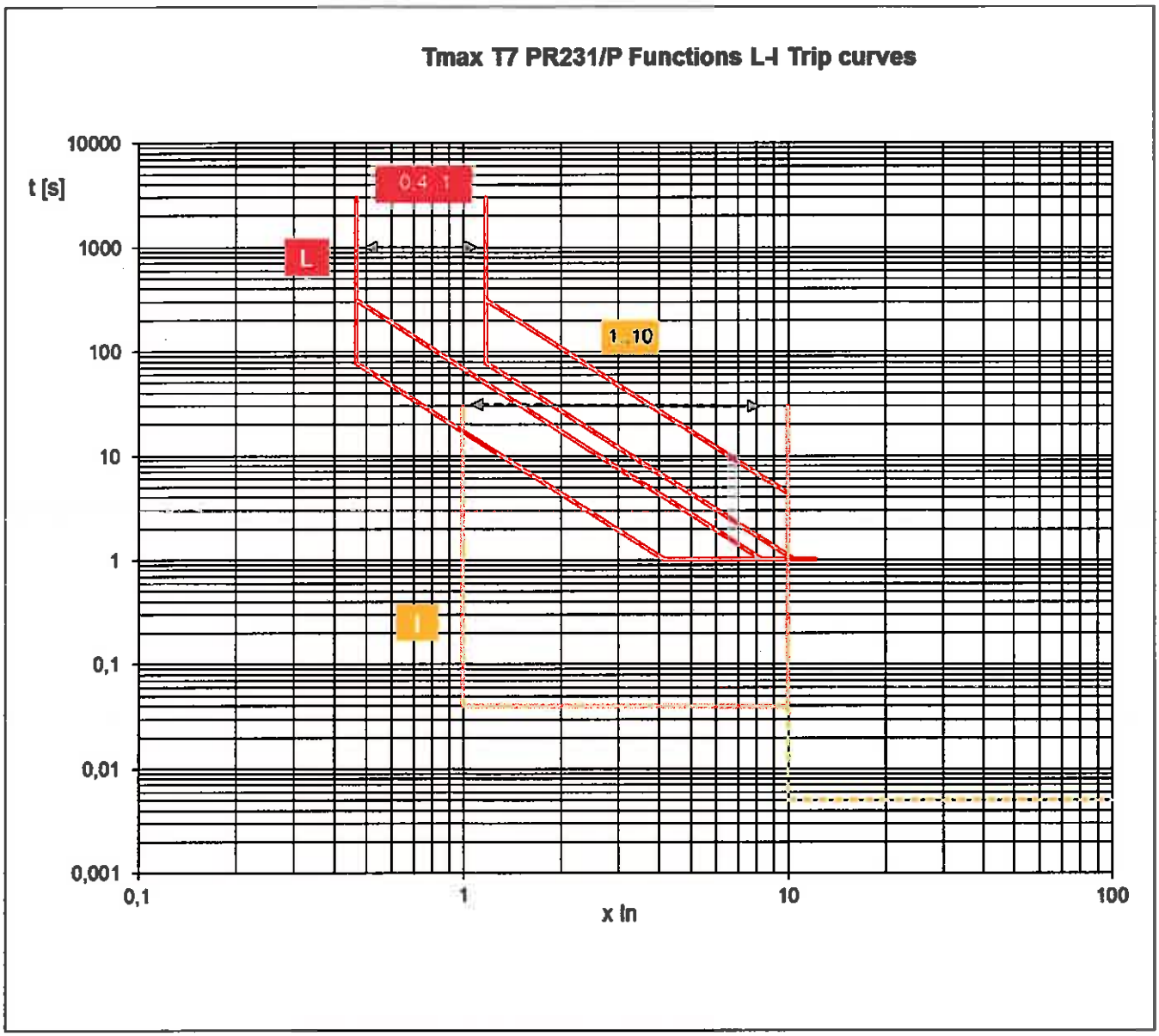
Tmax T7 PR231/P Functions L-I Trip curves
t [s]
10000
1000
100
10
1
0,1
0,01
0,001
0,1
1
10
100
x In
0.4 1
L
1 10
I

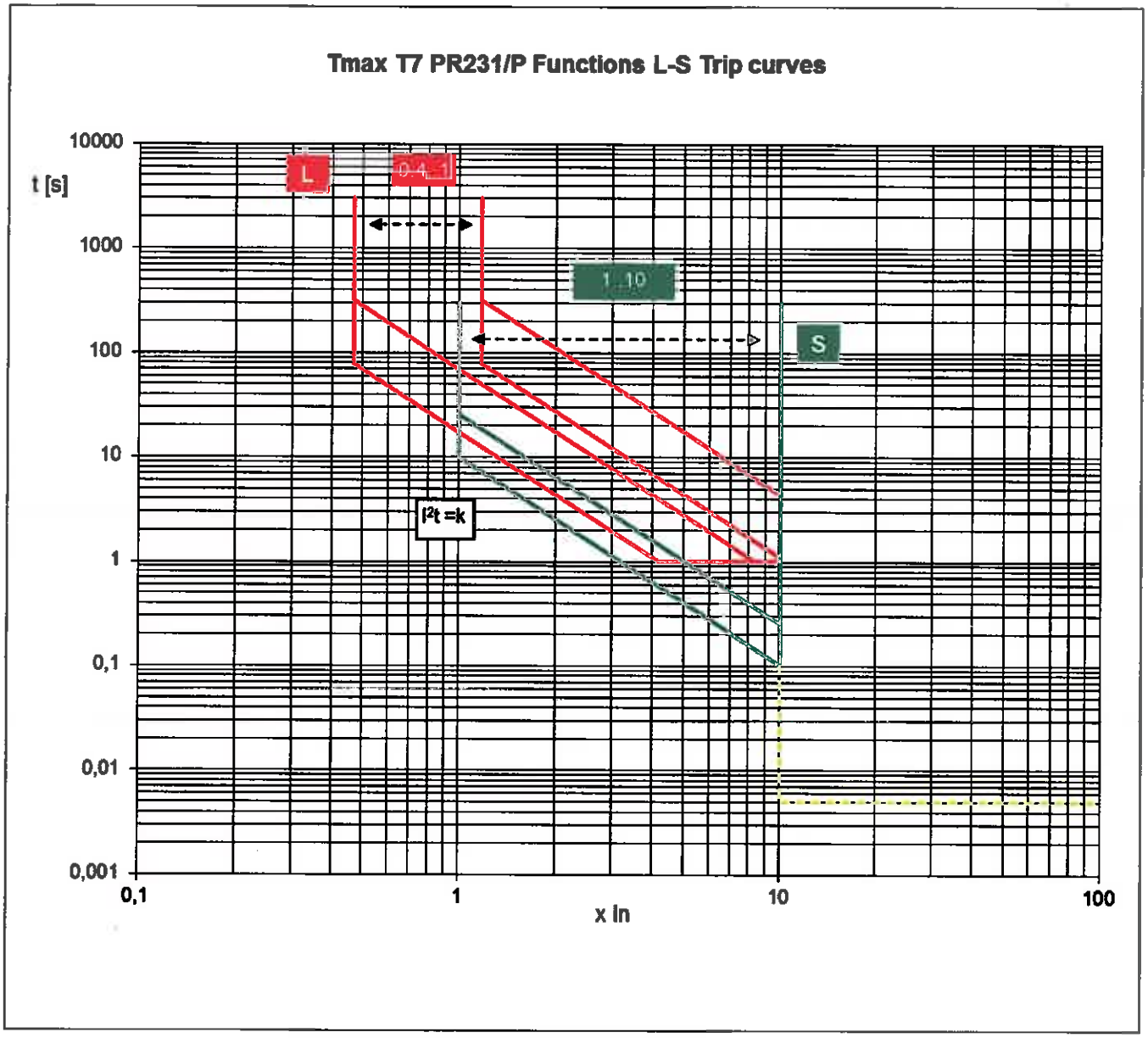

Information contained in this publication may be considered confidential.
Discretion is recommended when distributing.
Materials and specifications are subject to change without notice.
CAT, CATERPILLAR, their respective logos, "Caterpillar Yellow," the "Power Edge" trade dress, as well as corporate and product identity used herein, are trademarks of Caterpillar and may not be used without permission.

© 2013 Caterpillar
All Rights Reserved.

LEHE0470-00 (10/13)

METRIC 455-7841

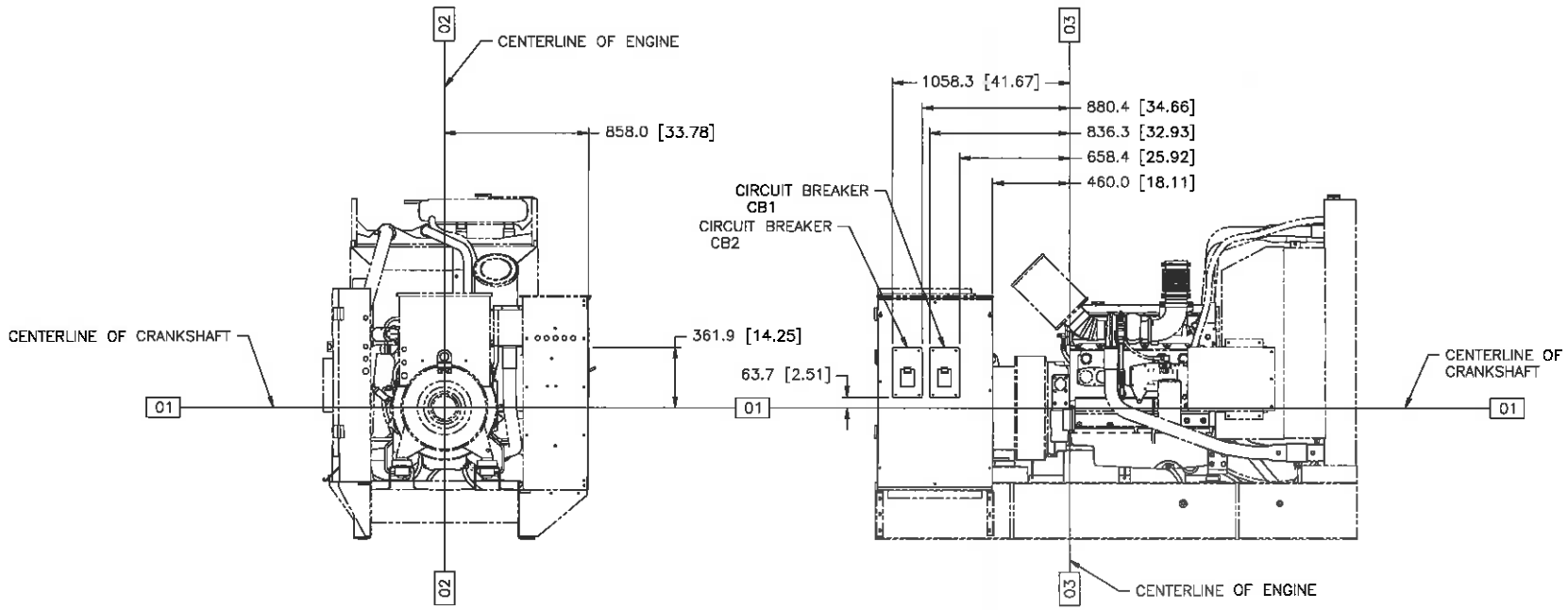

FRONT VIEW

RIGHT SIDE VIEW

CB1 (MULTIPLE MANUAL)		
MODEL	PRICING AR	AMPS
C9	LS1357 CHG 00	250
	LS1343 CHG 00	400
	LS1344 CHG 00	600
	LS1345 CHG 00	800
	LS1346 CHG 00	1200

CB2 (MULTIPLE MANUAL)		
MODEL	PRICING AR	AMPS
C9	LS1358 CHG 00	250
	LS1359 CHG 00	
	LS1347 CHG 00	400
	LS1348 CHG 00	
	LS1349 CHG 00	600
	LS1350 CHG 00	800
	LS1351 CHG 00	1200

1E2733 DRAWING-AUTOCAD
FD011 INTPR & TOL
SPEC NO. NAME
DRN I.V.U. JORDAN
CHK E.A. SOTO
APPR N.P. MOUNTJOY
SCALE 1 = 10
SHEET 2 OF 1
DD 05JAN14
CATERPILLAR INC.
INSTALLATION-ATTACHMENT
C9 CIRCUIT BREAKERS
455-7841
E

THOMPSON

CAT

Thompson Power

15

C9
JACKET WATER HEATER

This is a factory-installed tank-styled jacket water heater for increased cold-starting capability.
The system includes a thermostatically controlled heater, hoses and heater disconnect relay.
The compact design is ideal for location that require minimal mounting space.

FEATURES

- Complete with durable silicone hoses
- Vibration and shock tested to extreme limits to guarantee durability
- Automatically disconnected when engine is running via the generator space heater relay
- Supplied with UL recognized components
- Thermostat OFF TEMPERATURE is factory pre-set to 49°C (120°F)
- Molded from Polyphenylene Sulfide (PPS)
- Rust-free, resists corrosion, exceptional tensile strength
- Compatible with all chemicals
- Thermostatically controlled
- All parts are field replaceable
- Incoloy element for longer service life
- Compact design requires minimal mounting space

SPECIFICATIONS

Unit Specifications			
Design Voltage			
	208	220	240
Rating	1.5 kW	1.68 kW	2 kW
Frequency	50/60	50/60	50/60
Phase	1	1	1
Amps	7.22	7.64	8.3
Thermostat Range	37.8° – 48.9°C (100° – 120°F)		
Feature Code	JWH0027		

HEATER OPERATION

The heater uses UL compliant components to (UL1030) and has CSA certification, which is to both CSA and UL standards.

A thermostat controller is included to regulate the output temperature to within safe limits. When the generator set is not running, the heater is automatically connected to the AC supply through a power relay mounted in the control panel. Upon receiving a start signal, the AC supply is automatically disconnected by the power relay and automatically reconnected when the start signal is removed and the engine has stopped.

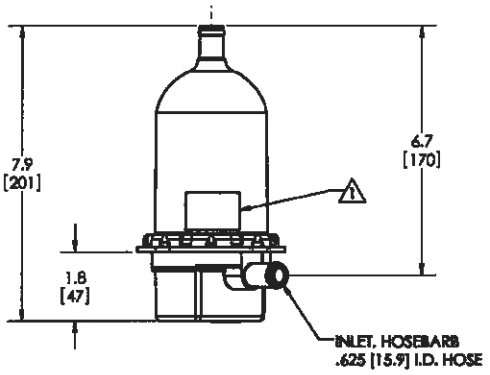

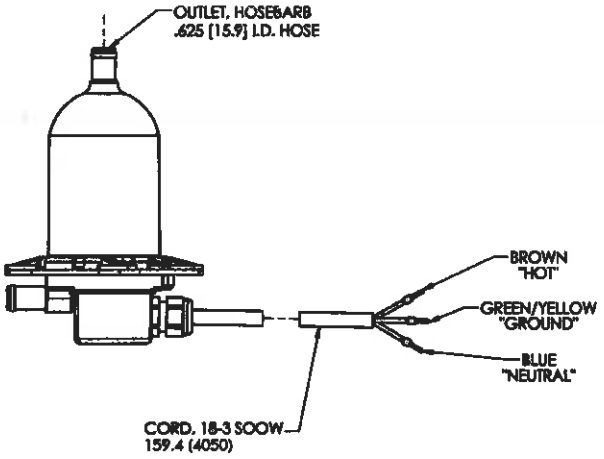

www.Cat-ElectricPower.com

© 2014 Caterpillar
All rights reserved.

Materials and specifications are subject to change without notice.
The International System of Units (SI) is used in this publication.

CAT, CATERPILLAR, their respective logos, "Caterpillar Yellow," the "Power Edge" trade dress, as well as corporate and product identity used herein, are trademarks of Caterpillar and may not be used without permission.

THOMPSON

Thompson Power

16

BATTERY CHARGER

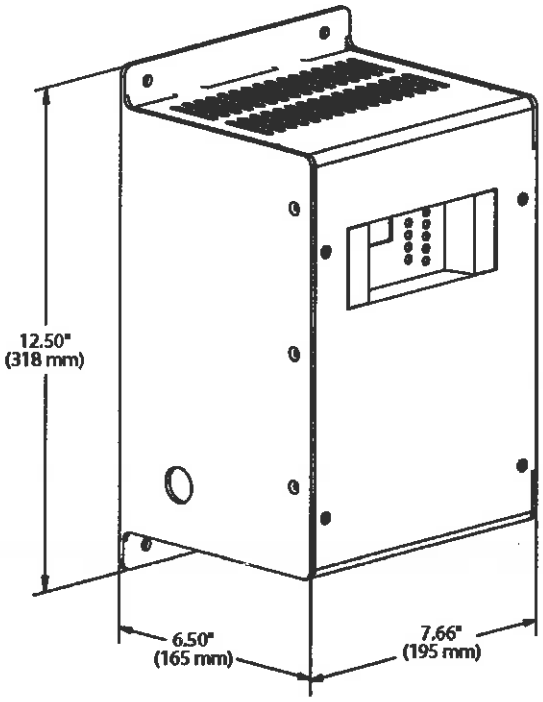

Image Shown may not Reflect Actual Package

UL 10 AMP BATTERY CHARGER

This battery charger offers accurate, automatic charging of lead-acid and nickel cadmium batteries. The output voltage automatically adjusts to changing input, load, battery and ambient conditions. This prevents battery over-charging and consequent loss of battery electrolyte.

Standard features include AC line compensation, precision voltage regulation, current limiting, automatic 2-rate charging, voltmeter and ammeter, temperature compensation and UL Listing.

The user interface is easy to understand with digital metering, NFPA 110 alarms and a battery fault alarm.

SPECIFICATION

Input Supply	110-120 V
	208-240 V
AC and DC Fuses	2 input and 2 output)
Output voltage	24V
Frequency	50/60 Hz
Operating temperature	-20°C (-4°F)
	to +60°C (140°F)

Housing constructed of rustproof anodized aluminum.

STANDARDS

- C-UL listed to UL 1236
- NFPA 70, NFPA 110
- CSA 22.2 No 107 certified
- UL 1564
- CE DOC to EN 60335
- IBC Seismic Certification

FEATURES

- Electronically current limited at 105% of rated output
- Alarm system
- Digital Display
- Lightning and voltage transient protection
- Protection of connected equipment against load dump protection
- Constant voltage, current limited, 4-rate automatic equalization
- IP 20 housing
- AC isolated from DC
- Temperature Compensation
  - On board temperature sensor with remote port
- Auto AC line compensation
- Output regulated by sensed battery voltage

BATTERY CHARGER

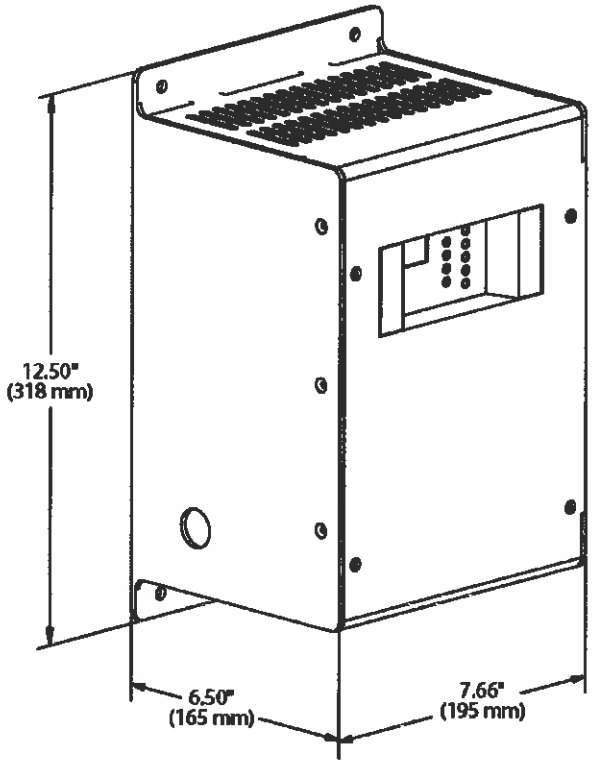

Output		Input	
Amps	Volts	Hz	Volts
10	24	50/60	110-120 208-240
Width	Depth	Height	Weight
195 mm (7.66")	165 mm (6.50")	318 mm (12.50")	10.4 kg (23 lb)
Feature codes			
BTC1024	BTC1028	BTC1035	
BTC1025	BTC1032		

NFPA 110 alarm package as follows:

- AC on — Green led (indication)
- AC fail — Red led and form C contact (2A)
- Float mode — LED
- Fast charge — LED
- Temp comp active — LED
- Low battery volts — Red led and Form C contact
- High Battery Volts — Red led and Form C contact
- Charger fail — Red led and Form C contact
- Battery fault — Red led and Form C contact
  - Battery disconnected
  - Battery polarity reversed
  - Mismatched charger battery voltage
  - Open or high resistance charger to battery connection
  - Open battery cell or excessive internal resistance

Information contained in this publication may be considered confidential. Discretion is recommended when distributing.
Materials and specifications are subject to change without notice.
CAT, CATERPILLAR, their respective logos, "Caterpillar Yellow," the "Power Edge" trade dress as well as corporate and product identity used herein, are trademarks of Caterpillar and may not be used without permission.

www.Cat-ElectricPower.com

LEHE0141-02 (03-12)

©2012 Caterpillar
All Rights Reserved.
Printed in U.S.A.

THOMPSON

Thompson Power

17

PREMIUM HIGH OUTPUT BATTERIES

Cat Premium High Output Batteries are designed to survive the toughest abuse and built to perform in the harshest environments. They offer reliable starting power and long life in all climates. Their high cold cranking amps and reserve capacities have earned them the maximum performance rating in the battery industry.

FEATURES

- Rugged plates, connectors and element anchoring resist the industry's most abusive vibration tests
- Through-partition connectors shorten the electrical path and maximize starting power
- Extra-heavy grids increase life and power in extreme cold and heat
- Extra corrosion resistance and built-in overcharge protection reduce maintenance
- Durable plates with optimum acid/paste combination provide excellent charge acceptance after deep discharge
- Microporous polyethylene separator protects against "shorts" and vibration damage
- 40-degree tilt capacity eliminates damaging spills
- Impact-resistant cases provide extra strength, especially in sub-zero temperatures
- Flame arrestor safety vents reduce the possibility of explosion from external sparks

PREMIUM HIGH OUTPUT PERFORMANCE

BCI Group Size	Part No.	Volts	Cold Cranking Amps[1]	Reserve Capacity Minutes[2]	Amp Hr. Capacity @ 20 Hrs.	Construction	Add Water Maintenance Check/Hrs.	Max. Overall Dimensions			Normal Weight		Nominal Acid to Fill liter (qt)
								Length mm (in)	Width mm (in)	Height mm (in)	Wet kg (lb)	Dry kg (lb)	
4D	9X-9730	12	1300	400	190	LAC/P	1000	528 (20,8)	218 (8,6)	250 (9,8)	54 (119)	37 (81)	14 (14,8)
4D	9X-9720	12	1000	275	140	LAC/P	1000	528 (20,8)	218 (8,6)	250 (9,8)	46 (101)	27 (59)	15 (15,9)

[1] For 30 seconds at –18° C (0° F)
[2] Minimum of 25 amp output at 27° C (80° F)

LA = Low Antimony design
LAC = Low Antimony Calcium design
P = Polypropylene case
R = Hard Rubber case

Batteries have taper post design and are shipped dry.

PGS MODELS

Diesel	PGS 300-900F	PGS 900S-1500 PGS 425SL-600SL	PGS 1750-2250
Gas	PGS 150-450		
Standard Batteries	9X-9720 (qty 2)	9X-9730 (qty 2)	9X-9720 (qty 4)
Optional "Oversize Batteries"	9X-9730 (qty 2)	9X-9730 (qty 4)	9X-9730 (qty 4)

CATERPILLAR

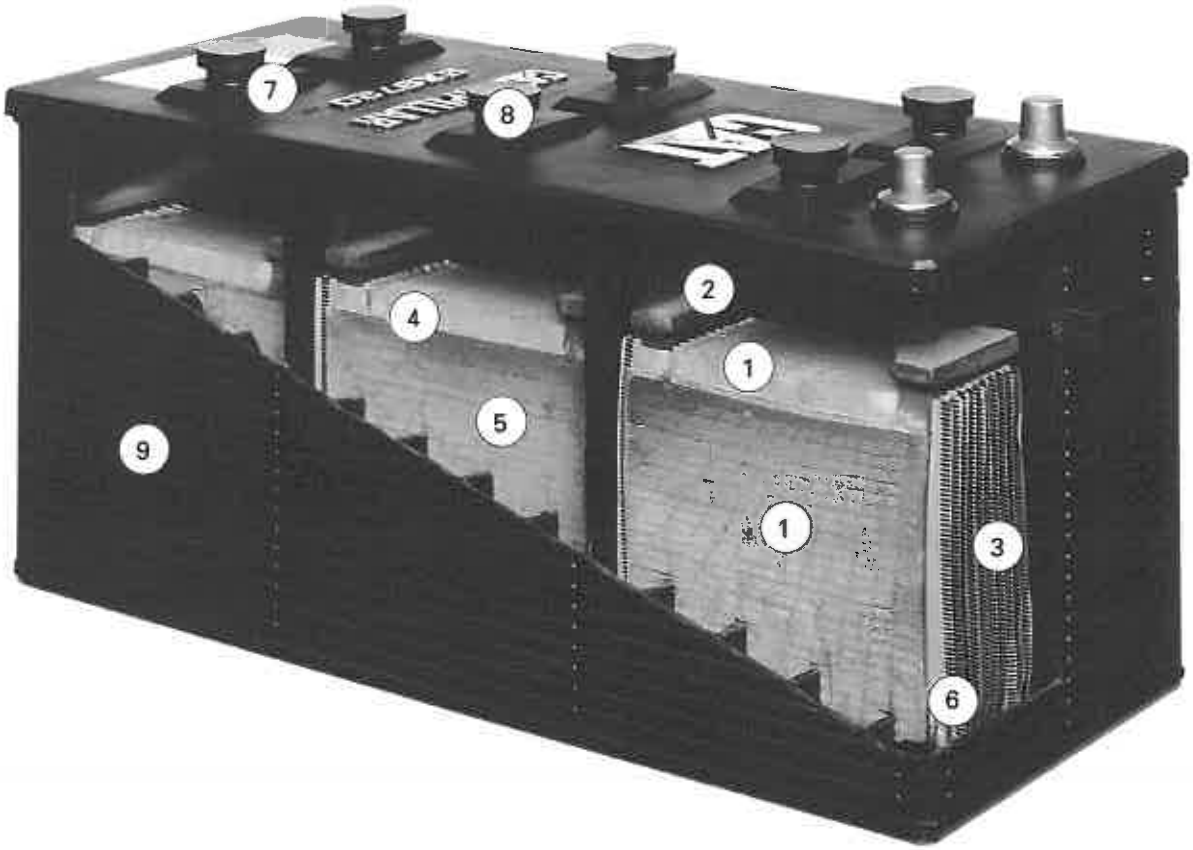

1. Rugged plates, connectors, and element anchoring resist vibration.
2. Through-partition connectors shorten the electrical path and maximize starting power.
3. Extra-heavy grids increase life and power in extreme cold and heat.
4. Extra corrosion resistance and built-in overcharge protection reduce maintenance.
5. Durable plates with optimum acid/paste combination provide excellent charge acceptance after deep discharge.
6. Microporous polyethylene separators protect against "shorts" and vibration damage.
7. 40-degree tilt capacity eliminates damaging spills.
8. Impact-resistant cases provide extra strength, especially in sub-zero temperatures.
9. Flame arrestor safety vents reduce the possibility of explosion from external sparks.

CATERPILLAR FACILITIES ISO 9001 CERTIFIED

www.CAT-ElectricPower.com

© 2001 Caterpillar
All rights reserved.
Printed in U.S.A.

U.S. sourced

LEHX7069-03 (6-01)

Materials and specifications are subject to change without notice.
The International System of Units (SI) is used in this publication.

THOMPSON

Thompson Power

18

WIRE PULL LIST

D.C. CONNECTIONS

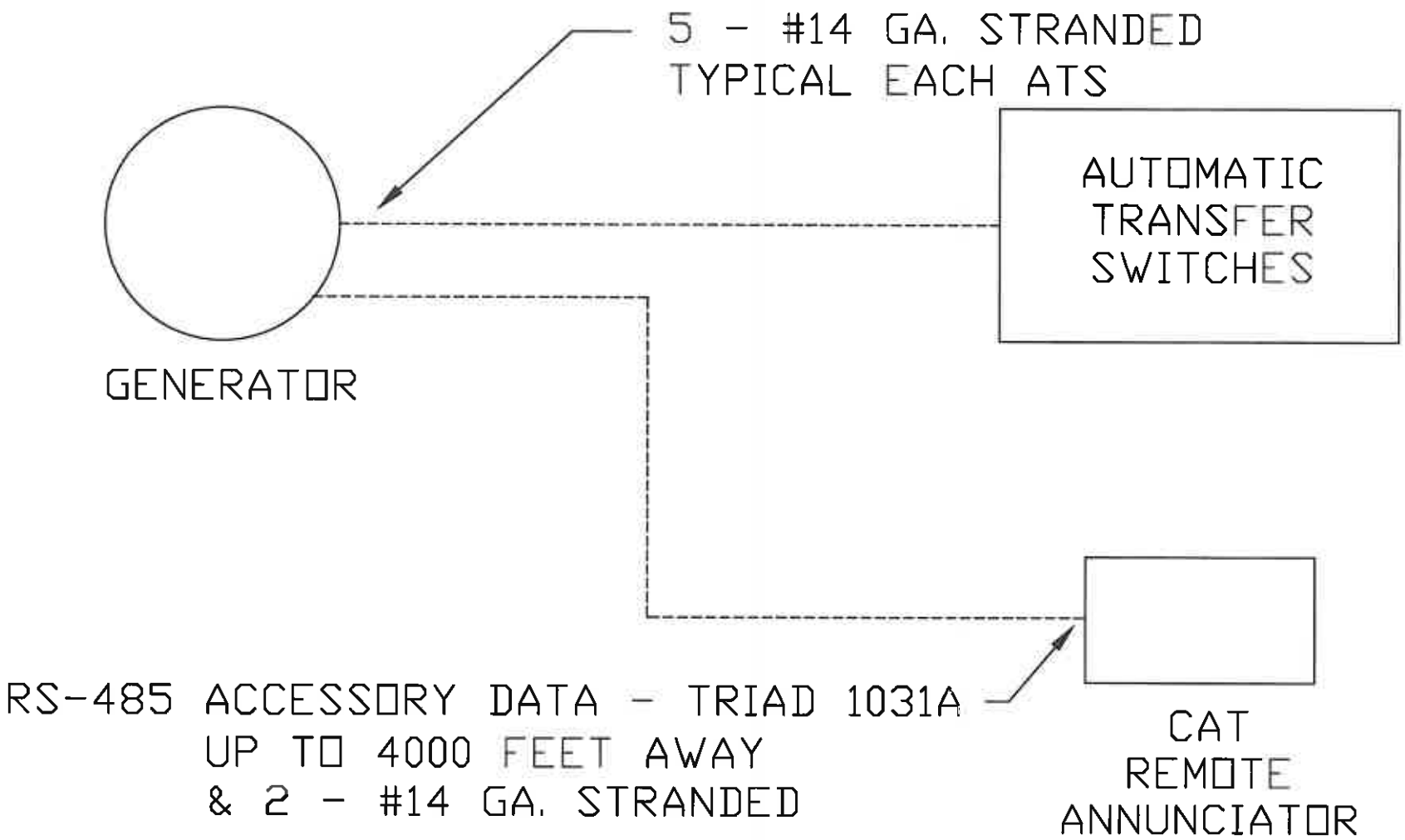

WIRE PULL LIST

A.C. OUTPUT CONNECTIONS

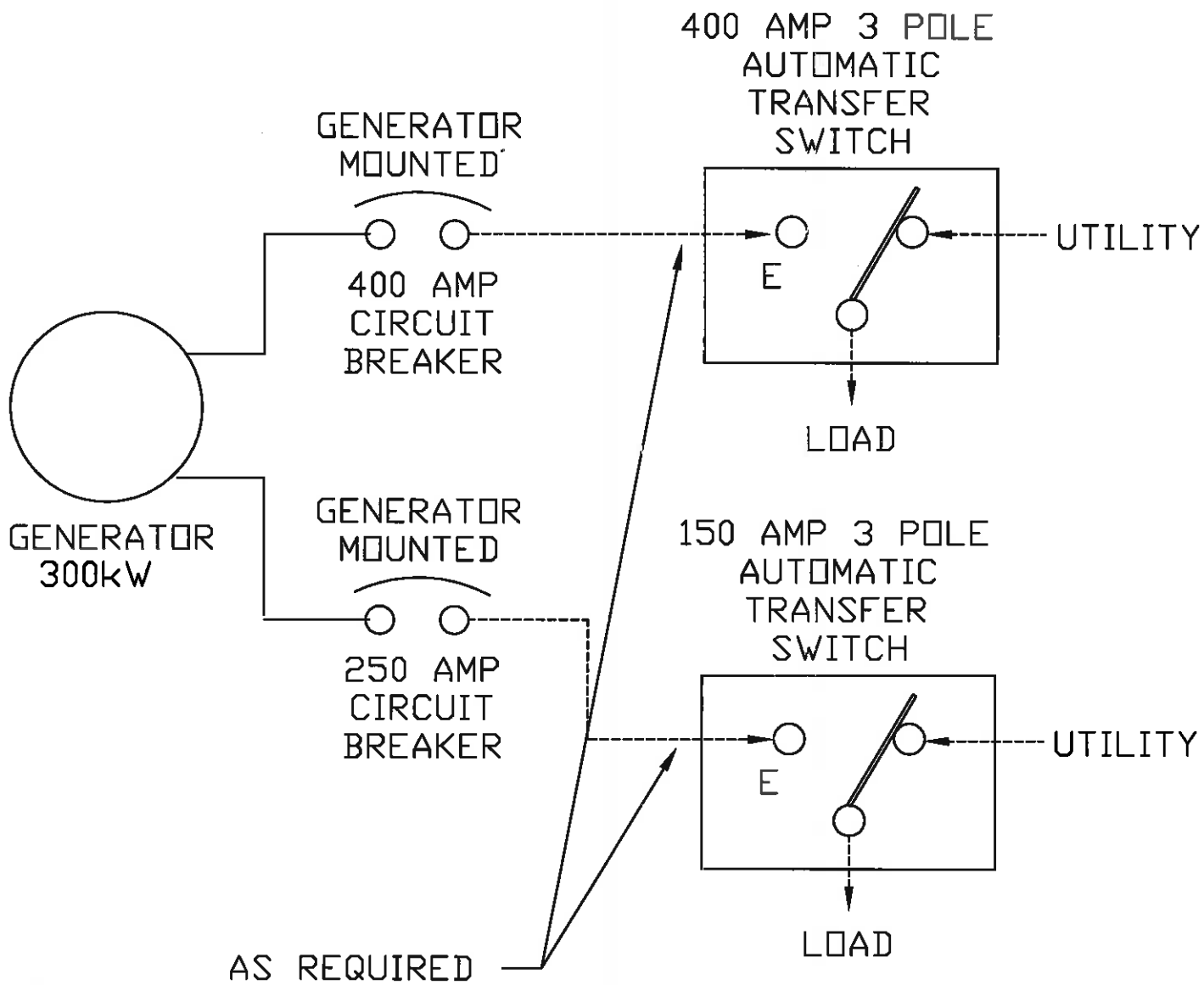

WIRE PULL LIST

A.C. INPUT CONNECTIONS

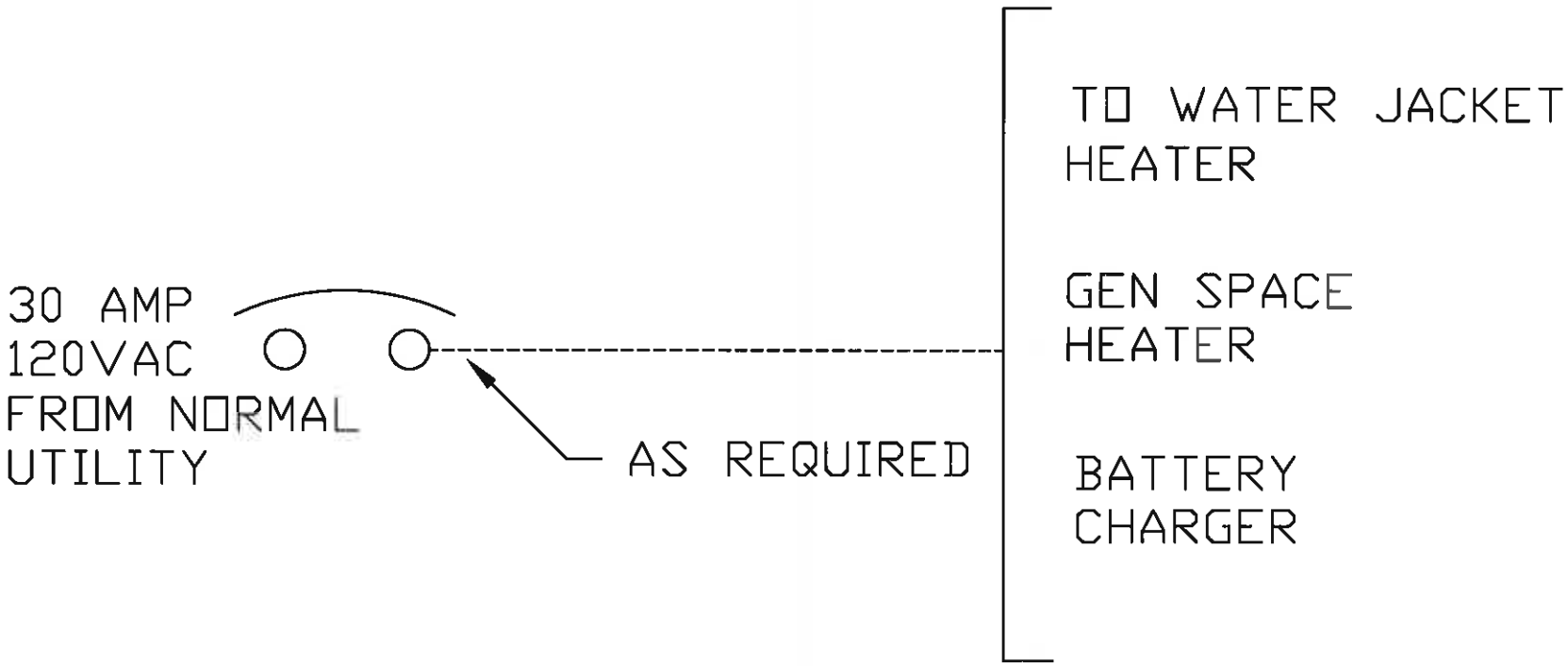

THOMPSON

Thompson Power

19

Effective with sales to the first user on or after August 1, 2014

CATERPILLAR LIMITED WARRANTY

Industrial, Petroleum, Locomotive, and Agriculture Engine Products and Electric Power Generation Products

Worldwide

Caterpillar Inc. or any of its subsidiaries ("Caterpillar") warrants new and remanufactured engines and electric power generation products sold by it (including any products of other manufacturers packaged and sold by Caterpillar), to be free from defects in material and workmanship.

This warranty does not apply engines sold for use in on-highway vehicle or marine applications; engines in machines manufactured by or for Caterpillar; C175, 3500 and 3600 series engines used in locomotive applications; 3000 Family engines, C0.5 through C4.4 and ACERT™ (C6.6, C7, C7.1, C9, C9.3, C11, C13, C15, C18, C27, and C32) engines used in industrial, mobile agriculture and locomotive applications; or Cat® batteries. These products are covered by other Caterpillar warranties.

This warranty is subject to the following:

Warranty Period

- For industrial engines, engines in a petroleum applications or Petroleum Power Systems (excluding petroleum fire pump application), or engines in a Locomotive application, or Uninterruptible Power Supply (UPS) systems, the warranty period is 12 months after date of delivery to the first user.
- For engines used in petroleum fire pump and mobile agriculture applications the warranty period is 24 months after date of delivery to the first user.
- For controls only (EPIC), configurable and custom switchgear products, and automatic transfer switch products, the warranty period is 24 months after date of delivery to the first user.
- For new CG132, CG170 and CG260 series power generation products the warranty period is 24 months/16,000 hours, whichever comes first, after date of delivery to first user.
- For electric power generation products other than CG132, CG170 and CG260 series in prime or continuous applications the warranty period is 12 months. For standby applications the warranty period is 24 months/1000 hours. For emergency standby applications the warranty period is 24 months/400 hours. All terms begin after date of delivery to the first user.
- For all other applications the warranty period is 12 months after date of delivery to the first user.

Caterpillar Responsibilities

If a defect in material or workmanship is found during the warranty period, Caterpillar will, during normal working hours and at a place of business of a Cat dealer or other source approved by Caterpillar:

- Provide (at Caterpillar's choice) new, Remanufactured, or Caterpillar approved repaired parts or assembled components needed to correct the defect.

Note: New, remanufactured, or Caterpillar approved repaired parts or assembled components provided under the terms of this warranty are warranted for the remainder of the warranty period applicable to the product in which installed as if such parts were original components of that product. Items replaced under this warranty become the property of Caterpillar.

- Replace lubricating oil, filters, coolant, and other service items made unusable by the defect.
- Provide reasonable and customary labor needed to correct the defect, including labor to disconnect the product from and reconnect the product to its attached equipment, mounting, and support systems, if required.

For new 3114, 3116, and 3126 engines and electric power generation products (including any new products of other manufacturers packaged and sold by Caterpillar):

- Provide travel labor, up to four hours round trip, if in the opinion of Caterpillar, the product cannot reasonably be transported to a place of business of a Cat dealer or other source approved by Caterpillar (travel labor in excess of four hours round trip, and any meals, mileage, lodging, etc. is the user's responsibility).

For all other products:

- Provide reasonable travel expenses for authorized mechanics, including meals, mileage, and lodging, when Caterpillar chooses to make the repair on-site.

User Responsibilities

The user is responsible for:

- Providing proof of the delivery date to the first user.
- Labor costs, except as stated under "Caterpillar Responsibilities," including costs beyond those required to disconnect the product from and reconnect the product to its attached equipment, mounting, and support systems.
- Travel or transporting costs, except as stated under "Caterpillar Responsibilities."
- Premium or overtime labor costs.
- Parts shipping charges in excess of those that are usual and customary.
- Local taxes, if applicable.
- Costs to investigate complaints, unless the problem is caused by a defect in Caterpillar material or workmanship.
- Giving timely notice of a warrantable failure and promptly making the product available for repair.
- Performance of the required maintenance (including use of proper fuel, oil, lubricants, and coolant) and items replaced due to normal wear and tear.
- Allowing Caterpillar access to all electronically stored data.

Limitations

Caterpillar is not responsible for:

- Failures resulting from any use or installation that Caterpillar judges improper.
- Failures resulting from attachments, accessory items, and parts not sold or approved by Caterpillar.
- Failures resulting from abuse, neglect, and/or improper repair.
- Failures resulting from user's delay in making the product available after being notified of a potential product problem.
- Failures resulting from unauthorized repairs or adjustments, and unauthorized fuel setting changes.
- Damage to parts, fixtures, housings, attachments, and accessory items that are not part of the engine, Cat Selective Catalytic Reduction System or electric power generation product (including any products of other manufacturers packaged and sold by Caterpillar).
- Repair of components sold by Caterpillar that is warranted directly to the user by their respective manufacturer. Depending on type of application, certain exclusions may apply. Consult your Cat dealer for more information.

(Continued on reverse side...)

This warranty covers every major component of the products. Claims under this warranty should be submitted to a place of business of a Cat dealer or other source approved by Caterpillar. For further information concerning either the location to submit claims or Caterpillar as the issuer of this warranty, write Caterpillar Inc., 100 N. E. Adams St., Peoria, IL USA 61629.

Caterpillar's obligations under this Limited Warranty are subject to, and shall not apply in contravention of, the laws, rules, regulations, directives, ordinances, orders, or statutes of the United States, or of any other applicable jurisdiction, without recourse or liability with respect to Caterpillar.

A) For products operating outside of Australia, Fiji, Nauru, New Caledonia, New Zealand, Papua New Guinea, the Solomon Islands and Tahiti, the following is applicable.

NEITHER THE FOREGOING EXPRESS WARRANTY NOR ANY OTHER WARRANTY BY CATERPILLAR, EXPRESS OR IMPLIED, IS APPLICABLE TO ANY ITEM CATERPILLAR SELLS THAT IS WARRANTED DIRECTLY TO THE USER BY ITS MANUFACTURER.

THIS WARRANTY IS EXPRESSLY IN LIEU OF ANY OTHER WARRANTIES, EXPRESS OR IMPLIED, INCLUDING ANY WARRANTY OF MERCHANTABILITY OR FITNESS FOR A PARTICULAR PURPOSE, EXCEPT CATERPILLAR EMISSION-RELATED COMPONENTS WARRANTIES FOR NEW ENGINES, WHERE APPLICABLE. REMEDIES UNDER THIS WARRANTY ARE LIMITED TO THE PROVISION OF MATERIAL AND SERVICES, AS SPECIFIED HEREIN.

CATERPILLAR IS NOT RESPONSIBLE FOR INCIDENTAL OR CONSEQUENTIAL DAMAGES.

CATERPILLAR EXCLUDES ALL LIABILITY FOR OR ARISING FROM ANY NEGLIGENCE ON ITS PART OR ON THE PART OF ANY OF ITS EMPLOYEES, AGENTS OR REPRESENTATIVES IN RESPECT OF THE MANUFACTURE OR SUPPLY OF GOODS OR THE PROVISION OF SERVICES RELATING TO THE GOODS.

IF OTHERWISE APPLICABLE, THE VIENNA CONVENTION ON CONTRACTS FOR THE INTERNATIONAL SALE OF GOODS IS EXCLUDED IN ITS ENTIRETY.

For personal or family use engines or electric power generation products, operating in the USA, its territories and possessions, some states do not allow limitations on how long an implied warranty may last nor allow the exclusion or limitation of incidental or consequential damages. Therefore, the previously expressed exclusion may not apply to you. This warranty gives you specific legal rights and you may also have other rights, which vary by jurisdiction. To find the location of the nearest Cat dealer or other authorized repair facility, call (800) 447-4986. If you have questions concerning this warranty or its applications, call or write:

In USA and Canada: Caterpillar Inc., Engine Division, P. O. Box 610, Mossville, IL 61552-0610. Attention: Customer Service Manager, Telephone (800) 447-4986. Outside the USA and Canada: Contact your Cat dealer.

B) For products operating in Australia, Fiji, Nauru, New Caledonia, New Zealand, Papua New Guinea, the Solomon Islands and Tahiti, the following is applicable:

THIS WARRANTY IS IN ADDITION TO WARRANTIES AND CONDITIONS IMPLIED BY STATUTE AND OTHER STATUTORY RIGHTS AND OBLIGATIONS THAT BY ANY APPLICABLE LAW CANNOT BE EXCLUDED, RESTRICTED OR MODIFIED ("MANDATORY RIGHTS") ALL OTHER WARRANTIES OR CONDITIONS, EXPRESS OR IMPLIED (BY STATUTE OR OTHERWISE), ARE EXCLUDED. WITHOUT LIMITING THE FOREGOING PROVISIONS OF THIS PARAGRAPH, WHERE A PRODUCT IS SUPPLIED FOR BUSINESS PURPOSES, THE CONSUMER GUARANTEES UNDER THE CONSUMER GUARANTEES ACT 1993 (NZ) WILL NOT APPLY.

NEITHER THIS WARRANTY NOR ANY OTHER CONDITION OR WARRANTY BY CATERPILLAR, EXPRESS OR IMPLIED (SUBJECT ONLY TO THE MANDATORY RIGHTS), IS APPLICABLE TO ANY ITEM CATERPILLAR SELLS THAT IS WARRANTED DIRECTLY TO THE USER BY ITS MANUFACTURER.

IF THE MANDATORY RIGHTS MAKE CATERPILLAR LIABLE IN CONNECTION WITH SERVICES OR GOODS, THEN TO THE EXTENT PERMITTED UNDER THE MANDATORY RIGHTS, THAT LIABILITY SHALL BE LIMITED AT CATERPILLAR'S OPTION TO (a) IN THE CASE OF SERVICES, THE SUPPLY OF THE SERVICES AGAIN OR THE PAYMENT OF THE COST OF HAVING THE SERVICES SUPPLIED AGAIN AND (b) IN THE CASE OF GOODS, THE REPAIR OR REPLACEMENT OF THE GOODS, THE SUPPLY OF EQUIVALENT GOODS, THE PAYMENT OF THE COST OF SUCH REPAIR OR REPLACEMENT OR THE ACQUISITION OF EQUIVALENT GOODS.

CATERPILLAR EXCLUDES ALL LIABILITY FOR OR ARISING FROM ANY NEGLIGENCE ON ITS PART OR ON THE PART OF ANY OF ITS EMPLOYEES, AGENTS OR REPRESENTATIVES IN RESPECT OF THE MANUFACTURE OR SUPPLY OF GOODS OR THE PROVISION OF SERVICES RELATING TO THE GOODS.

CATERPILLAR IS NOT LIABLE FOR INCIDENTAL OR CONSEQUENTIAL DAMAGES UNLESS IMPOSED UNDER MANDATORY RIGHTS.

IF OTHERWISE APPLICABLE, THE VIENNA CONVENTION ON CONTRACTS FOR THE INTERNATIONAL SALE OF GOODS IS EXCLUDED IN ITS ENTIRETY.

C) For products supplied in Australia:

IF THE PRODUCTS TO WHICH THIS WARRANTY APPLIES ARE:

- **I PRODUCTS OF A KIND ORDINARILY ACQUIRED FOR PERSONAL, DOMESTIC OR HOUSEHOLD USE OR CONSUMPTION, OR**
- **II PRODUCTS THAT COST AUD 40,000 OR LESS,**

WHERE THOSE PRODUCTS WERE NOT ACQUIRED FOR THE PURPOSE OF RE-SUPPLY OR FOR THE PURPOSE OF USING THEM UP OR TRANSFORMING THEM IN THE COURSE OF PRODUCTION OR MANUFACTURE OR IN THE COURSE OF REPAIRING OTHER GOODS OR FIXTURES, THEN THIS SECTION C APPLIES.

THE FOLLOWING MANDATORY TEXT IS INCLUDED PURSUANT TO THE AUSTRALIAN CONSUMER LAW AND INCLUDES REFERENCES TO RIGHTS THE USER MAY HAVE AGAINST THE DIRECT SUPPLIER OF THE PRODUCTS: OUR GOODS COME WITH GUARANTEES THAT CANNOT BE EXCLUDED UNDER THE AUSTRALIAN CONSUMER LAW. YOU ARE ENTITLED TO A REPLACEMENT OR REFUND FOR A MAJOR FAILURE AND COMPENSATION FOR ANY OTHER REASONABLY FORESEEABLE LOSS OR DAMAGE. YOU ARE ALSO ENTITLED TO HAVE THE GOODS REPAIRED OR REPLACED IF THE GOODS FAIL TO BE OF ACCEPTABLE QUALITY AND THE FAILURE DOES NOT AMOUNT TO A MAJOR FAILURE. THE INCLUSION OF THIS TEXT DOES NOT CONSTITUTE ANY REPRESENTATION OR ACCEPTANCE BY CATERPILLAR OF LIABILITY TO THE USER OR ANY OTHER PERSON IN ADDITION TO THAT WHICH CATERPILLAR MAY HAVE UNDER THE AUSTRALIAN CONSUMER LAW.

TO THE EXTENT THE PRODUCTS FALL WITHIN THIS SECTION C BUT ARE NOT OF A KIND ORDINARILY ACQUIRED FOR PERSONAL, DOMESTIC OR HOUSEHOLD USE OR CONSUMPTION, CATERPILLAR LIMITS ITS LIABILITY TO THE EXTENT IT IS PERMITTED TO DO SO UNDER THE AUSTRALIAN CONSUMER LAW TO, AT ITS OPTION, THE REPAIR OR REPLACEMENT OF THE PRODUCTS, THE SUPPLY OF EQUIVALENT PRODUCTS, OR THE PAYMENT OF THE COST OF SUCH REPAIR OR REPLACEMENT OR THE ACQUISITION OF EQUIVALENT PRODUCTS.

THE WARRANTY SET OUT IN THIS DOCUMENT IS GIVEN BY CATERPILLAR INC. OR ANY OF ITS SUBSIDIARIES, 100 N. E. ADAMS ST, PEORIA, IL USA 61629, TELEPHONE 1 309 675 1000, THE USER IS RESPONSIBLE FOR ALL COSTS ASSOCIATED WITH MAKING A CLAIM UNDER THE WARRANTY SET OUT IN THIS DOCUMENT, EXCEPT AS EXPRESSLY STATED OTHERWISE IN THIS DOCUMENT, AND THE USER IS REFERRED TO THE BALANCE OF THE DOCUMENT TERMS CONCERNING CLAIM PROCEDURES, CATERPILLAR RESPONSIBILITIES AND USER RESPONSIBILITIES.

TO THE EXTENT PERMISSIBLE BY LAW, THE TERMS SET OUT IN THE REMAINDER OF THIS WARRANTY DOCUMENT (INCLUDING SECTION B) CONTINUE TO APPLY TO PRODUCTS TO WHICH THIS SECTION C APPLIES.

©2014 Caterpillar All Rights Reserved
CAT, CATERPILLAR, their respective logos, "Caterpillar Yellow" the "Power Edge" trade dress as well as corporate and product identity used herein, are trademarks of Caterpillar and may not be used without permission.

NISSAN NORTH AMERICA, INC.
983 Nissan Drive
Smyrna, TN 37167
Tel: 615-459-1400

September 9, 2016

Title V Minor Permit Modification

Re: Permit #568333
Addition of a 480 Hp Emergency Generator

Submitted Electronically

To: Ms. Michelle Walker Owenby, Technical Secretary
Tennessee Dept. of Environment and Conservation
Division of Air Pollution Control
William R. Snodgrass Tennessee Tower
312 Rosa L. Parks Avenue, 15th Floor
Nashville, Tennessee 37243

The Nissan North America, Inc.'s Smyrna, Tennessee Facility (Nissan) plans to make the following change(s) pursuant to TAPCR 1200-3-9-.02(11)(f)5.(ii). This is a replacement of the July 15, 2016 letter to reflect changes in the final permit.

Brief Description of the Change

A developer is developing a site on Sam Griffin Road, in Smyrna, Tennessee, which is connected to the main Nissan Facility. The developer is constructing the Integrated Logistics Center (ILC), a 1.5 million square foot building to prepare parts for delivery to the assembly line. One million square feet will be used as warehouse and 0.5 million square feet will be occupied by suppliers to support Nissan manufacturing. A new 300 kilowatt emergency diesel generator engine will be installed as part of the emergency power for the ILC. The purpose of this Minor Modification is to include the new ILC Generator in the Title V permit.

Emissions Resulting from the Change

The resulting increases in emissions from this change are not significant. The potential emissions for the Generator Engine are based on 500 hours of operation per year. Emissions calculations are provide in Attachment 2.

Any new applicable requirements that will apply when the change occurs

The ILC Generator Engine is a new source for the Title V permit. The new emergency generator engine is subject to the NESHAP 40 CFR 63 Subpart ZZZZZ for Reciprocating Internal Combustion Engines and the NSPS 40 CFR 60 Subpart IIII for Stationary Compression Ignition Internal Combustion Engines. However, these requirements are already included in the Title V permit for other sources.

This change does not exceed the allowable emission rate for VOC and PM and does not constitute a Title I modification. This change does not violate applicable requirements or contravene federally enforceable permit terms and conditions that are monitoring, recordkeeping, reporting, or compliance certification requirements.

Attachment 1 contains a proposed list of permit conditions for this project. Attachment 2 contains the certification of Truth, Accuracy & Completeness by the responsible official. This attachment also contains the Title V application forms for this project. Attachment 3 contains technical specification sheets for the engine.

Sincerely,

John Harris, Director
Facilities, Environmental, and Systems Engineering

cc: Bill McCabe (TDEC, Nashville EFO) - **Submitted Electronically**

Attachment 1

Proposed Title V Permit Language

75-0155-99	One Diesel-Fired Emergency Reciprocating Internal Combustion Engine with Generator for Integrated Logistics Center (ILC) NSPS (Subpart IIII), NESHAP (Subpart ZZZZ)
Conditions E77-1 through E77-18 apply to source 75-0155-99.	

E77-1(SM2). This source is subject to the Standards of Performance for Stationary Compression Ignition Internal Combustion Engines (40 CFR Part 60, Subpart IIII). The permittee shall comply with 40 CFR Part 60, Subpart IIII upon startup.

E77-2(SM2). This source is subject to the National Emission Standards for Hazardous Air Pollutants for Stationary Reciprocating Internal Combustion Engines (40 CFR Part 63, Subpart ZZZZ). The permittee shall meet the requirements of 40 CFR part 63, subpart ZZZZ, by meeting the requirements of 40 CFR part 60, subpart IIII. No further requirements apply for the emergency engine under 40 CFR part 63, subpart ZZZZ.

E77-3(SM2). The rated power output was stated to be 480 horsepower (480 Hp).

TAPCR 1200-03-09-.02(11)(f)5.(ii)(II); application dated July 14, 2016

E77-4(SM2). Only No. 2 fuel oil and diesel fuel shall be used as fuels for this source.

TAPCR 1200-03-14-.03(5)

E77-5(SM2). Particulate Matter (PM) emitted from this source (75-0155-99) shall not exceed 0.20 grams per kilowatt-hour (0.16 lb/hr).

40 CFR §60.4205(b)

Compliance Method: The permittee shall assure compliance with this emission limitation by assuring compliance with **Conditions E77-3(SM2), E77-10(SM2), E77-13(SM2), and E77-14(SM2).**

E77-6(SM2). Sulfur Dioxide (SO_2) emitted from this source (75-0155-99) shall not exceed 0.99 pounds per hour.

TAPCR 1200-03-14-.03(5)

Compliance Method: The permittee shall assure compliance with this emission limitation by assuring compliance with **Conditions E77-3(SM2) and E77-11(SM2).** Compliance with this emission limitation is based on an emission factor of 0.00205 pounds of SO_2 per horsepower-hour (EPA AP-42, Section 3.3, October 1996).

E77-7(SM2). Carbon Monoxide (CO) emitted from this source (75-0155-99) shall not exceed 3.5 grams per kilowatt-hour (2.76 lb/hr).

40 CFR §60.4205(b)

Compliance Method: The permittee shall assure compliance with this emission limitation by assuring compliance with **Conditions E77-3(SM2), E77-10(SM2), E77-13(SM2), and E77-14(SM2).**

E77-8(SM2). Non-Methane Hydrocarbons and Nitrogen Oxides (NMHC + NO_X) emitted from this source (75-0155-99) shall not exceed 4.0 grams per kilowatt-hour (3.16 lb/hr).

40 CFR §60.4205(b)

Compliance Method: The permittee shall assure compliance with this emission limitation by assuring compliance with **Conditions E77-3(SM2), E77-10(SM2), E77-13(SM2), and E77-14(SM2).**

E77-9(SM2). Visible emissions from this source (75-0155-99) shall not exceed the following:

a) Twenty percent (20%) opacity during the acceleration mode;
b) Fifteen percent (15%) opacity during the lugging mode; and
c) Fifty percent (50%) opacity during the peaks in either the acceleration or lugging modes.

The engine manufacturer is responsible for testing. Opacity levels are to be measured and calculated as set forth in 40 CFR part 86, subpart I. Notwithstanding the provisions of 40 CFR part 86, subpart I, two-cylinder nonroad engines may be tested using an exhaust muffler that is representative of exhaust mufflers used with the engines in use.

40 CFR §60.4205(b); 40 CFR §60.4202(a)(2); and 40 CFR §89.113(a) and (b)

E77-10(SM2). Owners and operators of stationary CI ICE must operate and maintain stationary CI ICE that achieve the emission standards as required in 40 CFR §60.4205 over the entire life of the engine.

40 CFR §60.4206

E77-11(SM2). The permittee shall use diesel fuel that meets the requirements of 40 CFR 80.510(b), as follows:

(1) Sulfur content shall not exceed 15 ppm maximum for nonroad diesel fuel.
(2) Cetane index or aromatic content, as follows:
  (i) A minimum cetane index of 40; or
  (ii) A maximum aromatic content of 35 volume percent.

40 CFR §60.4207(b)

E77-12(SM2). Pursuant to 40 CFR §60.4209(a), for each emergency stationary CI internal combustion engine that does not meet the standards applicable to non-emergency engines, the permittee must install a non-resettable hour meter prior to startup of the engine.

E77-13(SM2). The permittee must do all of the following, except as permitted under paragraph (4) of this condition:

(1) Operate and maintain the stationary CI internal combustion engine and control device according to the manufacturer's emission-related written instructions;
(2) Change only those emission related settings that are permitted by the manufacturer; and
(3) Meet the requirements of 40 CFR parts 89, 94 and/or 1068, as they apply to the permittee.
(4) If the permittee does not install, configure, operate, and maintain the engine and control device according to the manufacturer's emission-related written instructions, or the permittee changes emission related settings in a way that is not permitted by the manufacturer, the permittee must demonstrate compliance as follows:
  (i) The permittee must keep a maintenance plan and records of conducted maintenance and must, to the extent practicable, maintain and operate the engine in a manner consistent with good air pollution control practice for minimizing emissions. In addition, the permittee must conduct an initial performance test to demonstrate compliance with the applicable emission standards within 1 year of startup, or within 1 year after an engine and control device is no longer installed, configured, operated, and maintained in accordance with the manufacturer's emission-related written instructions, or within 1 year after you change emission-related settings in a way that is not permitted by the manufacturer.

40 CFR §60.4211(a)

E77-14(SM2). The permittee shall comply with the PM, CO, and (NMHC + NOx) emission limitations by purchasing an engine certified to the emission standards in 40 CFR §60.4205(b) based on the model year and maximum engine power. The permittee shall maintain a record of this certification. The engine shall be installed and configured according to the manufacturer's emission-related specifications, except as permitted in paragragh (4) of **Condition E77-13(SM2)** of this permit.

40 CFR §60.4211(c)

E77-15(SM2). The permittee must operate the emergency stationary ICE according to the requirements in paragraphs (1) through (3) of this condition. In order for the engine to be considered an emergency stationary ICE under 40 CFR 60, subpart IIII, any operation other than emergency operation, maintenance and testing, and operation in non-emergency situations for 50 hours per year, as described in paragraphs (1) through (3) of this condition, is prohibited. If the permittee does not operate the engine according to the requirements in paragraphs (1) through (3) of this condition, the engine will not be considered an emergency engine under this subpart and must meet all requirements for non-emergency engines.

(1) There is no time limit on the use of emergency stationary ICE in emergency situations.
(2) The permittee may operate your emergency stationary ICE for any combination of the purposes specified in paragraph (2)(i) of this condition for a maximum of 100 hours per calendar year. Any operation for non-emergency situations as allowed by paragraph (3) of this condition counts as part of the 100 hours per calendar year allowed by this paragraph (2).
  (i) Emergency stationary ICE may be operated for maintenance checks and readiness testing, provided that the tests are recommended by federal, state or local government, the manufacturer, the vendor, the regional transmission organization or equivalent balancing authority and transmission operator, or the insurance company associated with the engine. The owner or operator may petition the Technical Secretary for approval of additional hours to be used for maintenance checks and readiness testing, but a petition is not required if the owner or operator maintains records indicating that federal, state, or local standards require maintenance and testing of emergency ICE beyond 100 hours per calendar year.
(3) Emergency stationary ICE may be operated for up to 50 hours per calendar year in non-emergency situations. The 50 hours of operation in non-emergency situations are counted as part of the 100 hours per calendar year for maintenance and testing provided in paragraph (2) of this condition. Except as provided in paragraph (3)(i) of this condition, the 50

hours per calendar year for non-emergency situations cannot be used for peak shaving or non-emergency demand response, or to generate income for a facility to an electric grid or otherwise supply power as part of a financial arrangement with another entity.

(i) The 50 hours per year for non-emergency situations can be used to supply power as part of a financial arrangement with another entity if all of the following conditions are met:

(A) The engine is dispatched by the local balancing authority or local transmission and distribution system operator;

(B) The dispatch is intended to mitigate local transmission and/or distribution limitations so as to avert potential voltage collapse or line overloads that could lead to the interruption of power supply in a local area or region.

(C) The dispatch follows reliability, emergency operation or similar protocols that follow specific NERC, regional, state, public utility commission or local standards or guidelines.

(D) The power is provided only to the facility itself or to support the local transmission and distribution system.

(E) The owner or operator identifies and records the entity that dispatches the engine and the specific NERC, regional, state, public utility commission or local standards or guidelines that are being followed for dispatching the engine. The local balancing authority or local transmission and distribution system operator may keep these records on behalf of the engine owner or operator.

40 CFR §60.4211(f)

E77-16(SM2). The permittee must keep monthly records of the hours of operation of the engine that is recorded through the non-resettable hour meter. The permittee must document how many hours are spent for the following categories: (a) emergency operation, as specified in **Condition E77-15(SM2)**, Paragraph (1), including what classified the operation as emergency; (b) maintenance checks and readiness testing, as specified in **Condition E77-15(SM2)**, Paragraph (2); and (c) non-emergency operation, as specified in **Condition E77-15(SM2)**, Paragraph (3). The permittee shall calculate the operating hours during the calendar year. The permittee shall maintain the following log format or an alternative format which readily provides the same required information.

Logs for each emergency stationary RICE

Month, Year	Emergency Operation (hr/mon)	Emergency Operation (hr/calendar year)	Maintenance Checks and Readiness Testing (hr/mon)	Maintenance Checks and Readiness Testing (hr/calendar year)	Non-Emergency Operation (hr/mon)	Non-Emergency Operation (hr/calendar year)
				Column A		Column B
January						
February						
Etc.						
December						

	Add Columns A + B	Add Column B
Limit	100 hours	50 hours
January		
February		
Etc.		
December		

TAPCR 1200-03-10-.04(2)(b)

E77-17(SM2). For fee purposes, the permittee shall calculate emissions of particulate matter (PM), sulfur dioxide (SO_2), and nitrogen oxide (NO_x). The permittee shall utilize the emission factors listed in the table below. The permittee shall utilize the hours of operation from **Condition E77-16(SM2)**. The permittee shall maintain the following log format or an alternative format which readily provides the same required information.

Emission from July 1 to June 30 (Fee Accounting Period)

Pollutant	Emission Factors	Emission Factors Source	Hours of Operation (hr/yr)	Emissions (ton/yr)
PM	0.20 grams PM/kw-hr	NSPS standard		
SO_2	0.00205 lb SO2/MMBtu	AP-42, Section 3.3		
NMHC + NO_X	4.0 grams NOx/kw-hr	NSPS standard		

TAPCR 1200-03-26-.02(9)(g)2.(ii)

E77-18(SM2). If this source operates for the purposes specified in paragraph (3) of **Condition E77-15(SM2)**, the permittee must submit an annual report according to the following requirements in (a) through (c) of this condition.

(a) The report must contain the following information:
- (i) Company name and address where the engine is located.
- (ii) Date of the report and beginning and ending dates of the reporting period.
- (iii) Engine site rating and model year.
- (iv) Latitude and longitude of the engine in decimal degrees reported to the fifth decimal place.
- (v) Hours spent for operation for the purposes specified in paragraph (3) of **Condition E77-15(SM2)**, including the date, start time, and end time for engine operation for the purposes specified in paragraph (3) of **Condition E77-15(SM2)**. The report must also identify the entity that dispatched the engine and the situation that necessitated the dispatch of the engine.

(b) The first annual report must cover the calendar year 2016 and must be submitted no later than March 31, 2017. Subsequent annual reports for each calendar year must be submitted no later than March 31 of the following calendar year.

(c) The annual report must be submitted electronically using the subpart specific reporting form in the Compliance and Emissions Data Reporting Interface (CEDRI) that is accessed through EPA's Central Data Exchange (CDX) (*www.epa.gov/cdx*). However, if the reporting form specific to this subpart is not available in CEDRI at the time that the report is due, the written report must be submitted to the Technical Secretary at one of the addresses listed below:

By mail:
Division of Air Pollution Control
William R. Snodgrass Tennessee Tower
312 Rosa L. Parks Avenue, 15th Floor
Nashville, TN 37243

Or

By email:
Air.Pollution.Control@tn.gov

40 CFR §60.4214(d)

Attachment 2

Statement of Truth, Accuracy & Completeness Certification
& APC Title V Application Forms

State of Tennessee
Department of Environment and Conservation
Division of Air Pollution Control
William R. Snodgrass Tennessee Tower
312 Rosa L. Parks Avenue, 15th Floor
Nashville, TN 37243
Telephone: (615) 532-0554

TITLE V PERMIT APPLICATION
INDEX OF AIR POLLUTION PERMIT APPLICATION FORMS

Section 1: Identification and Diagrams		
This application contains the following forms:	APC Form 1, Facility Identification	1
	APC Form 2, Operations and Flow Diagrams	1

Section 2: Emission Source Description Forms		
		Total number of this form
This application contains the following forms (one form for each incinerator, printing operation, fuel burning installation, etc.):	APC Form 3, Stack Identification	1
	APC Form 4, Fuel Burning Non-Process Equipment	
	APC Form 5, Stationary Gas Turbines or Internal Combustion Engines	1
	APC Form 6, Storage Tanks	
	APC Form 7, Incinerators	
	APC Form 8, Printing Operations	
	APC Form 9, Painting and Coating Operations	
	APC Form 10, Miscellaneous Processes	
	APC Form 33, Stage I and Stage II Vapor Recovery Equipment	
	APC Form 34, Open Burning	

Section 3: Air Pollution Control System Forms		
		Total number of this form
This application contains the following forms (one form for each control system in use at the facility):	APC Form 11, Control Equipment - Miscellaneous	
	APC Form 13, Adsorbers	
	APC Form 14, Catalytic or Thermal Oxidation Equipment	
	APC Form 15, Cyclones/Settling Chambers	
	APC Form 17, Wet Collection Systems	
	APC Form 18, Baghouse/Fabric Filters	

(OVER)

Section 4: Compliance Demonstration Forms

		Total number of this form
This application contains the following forms (one form for each incinerator, printing operation, fuel burning installation, etc.):	APC Form 19, Compliance Certification - Monitoring and Reporting - Description of Methods for Determining Compliance	1
	APC Form 20, Continuous Emissions Monitoring	
	APC Form 21, Portable Monitors	
	APC Form 22, Control System Parameters or Operating Parameters of a Process	
	APC Form 23, Monitoring Maintenance Procedures	
	APC Form 24, Stack Testing	
	APC Form 25, Fuel Sampling and Analysis	
	APC Form 26, Record Keeping	1
	APC Form 27, Other Methods	
	APC Form 28, Emissions from Process Emissions Sources / Fuel Burning Installations / Incinerators	1
	APC Form 29, Emissions Summary for the Facility or for the Source Contained in This Application	1
	APC Form 30, Current Emissions Requirements and Status	1
	APC Form 31, Compliance Plan and Compliance Certification	
	APC Form 32, Air Monitoring Network	

Section 5: Statement of Completeness and Certification of Compliance

I have reviewed this application in its entirety and to the best of my knowledge, and based on information and belief formed after reasonable inquiry, the statements and information contained in this application are true, accurate, and complete. I have provided all the information that is necessary for compliance purposes and this application consists of 25 pages and they are numbered from page Index 1 to 37-9. The status of this facility's compliance with all applicable air pollution control requirements, including the enhanced monitoring and compliance certification requirements of the Federal Clean Air Act, is reported in this application along with the methods to be used for compliance demonstration.

Name and Title-of Responsible Official	Telephone Number with Area Code
John Harris, Director Facilities, Environmental and Systems Engineering	(615) 459-1400
Signature of Responsible Official	**Date of Application**
	9/15/16

(For definition of responsible official, see instructions for APC Form 1)

State of Tennessee
Department of Environment and Conservation
Division of Air Pollution Control
William R. Snodgrass Tennessee Tower
312 Rosa L. Parks Avenue, 15th Floor
Nashville, TN 37243
Telephone: (615) 532-0554

TITLE V PERMIT APPLICATION
FACILITY IDENTIFICATION

SITE INFORMATION				
1. Organization's legal name Nissan North America, Inc. - Smyrna			For APC Use Only	APC company point no.
2. Site name (if different from legal name)				APC Log/Permit no.
3. Site address (St./Rd./Hwy.) 983 Nissan Drive			NAICS or SIC Code NAICS Code 33611	
City or distance to nearest town Smyrna		Zip code 37167	County name Rutherford	
4. Site location (in Lat./Long)	Latitude UTM Vert. 3979390mN		Longitude UTM Horiz. 545540mE	
CONTACT INFORMATION (RESPONSIBLE OFFICIAL)				
5. Responsible official contact John Harris			Phone number with area code (615) 459-1400	
6. Mailing address (St./Rd./Hwy.) 983 Nissan Drive Bin 26D			Fax number with area code	
City Smyrna	State TN	Zip code 37167	Email address john.harris@nissan-usa.com	
CONTACT INFORMATION (TECHNICAL)				
7. Principal technical contact Mike Haverstick			Phone number with area code (615) 223-3902	
8. Mailing address (St./Rd./Hwy.) 983 Nissan Drive Bin 26D			Fax number with area code	
City Smyrna	State TN	Zip code 37167	Email address mike.haverstick@nissan-usa.com	
CONTACT INFORMATION (BILLING)				
11. Billing contact Mike Haverstick			Phone number with area code (615) 223-3902	
12. Mailing address (St./Rd./Hwy.) 983 Nissan Drive Bin 26D			Fax number with area code	
City Smyrna	State TN	Zip code 37167	Email address mike.haverstick@nissan-usa.com	

TYPE OF PERMIT REQUESTED

13. Permit requested for:

Initial application to operate:		Minor permit modification:	✓
Permit renewal to operate:		Significant modification:	
Administrative permit amendment:		Construction permit:	

(OVER)

HAZARDOUS AIR POLLUTANTS, DESIGNATIONS, AND OTHER PERMITS ASSOCIATED WITH FACILITY

14. Is this facility subject to the provisions governing prevention of accidental releases of hazardous air contaminants contained in Chapter 1200-03-32 of the Tennessee Air Pollution Control regulations?

☐ Yes ☑ No

If the answer is Yes, are you in compliance with the provisions of Chapter 1200-03-32 of the Tennessee Air Pollution Control regulations?

☐ Yes ☐ No

15. If facility is located in an area designated as "Non-Attainment" or "Additional Control", indicate the pollutant(s) for the designation.

NA

16. List all valid Air Pollution permits issued to the sources contained in this application [identify all permits with most recent permit numbers and emission source reference numbers listed on the permit(s)].

Title V Permit Number: 568333, Significant Modification #1, Issued January 13, 2016
Significant Modification #3, PL2 Prime Combination of Limits, submitted June 17, 2016
Minor Modification #6, ILC Fire Pump, submitted June 17, 2016

Nissan is requesting a Minor Modification to install Emergency Diesel Generator at the new Integrated Logistics Center (ILC) on Sam Griffin Road. The new engine will be subject to the NESHAP 40 CFR Part 63 Subpart ZZZZ and the NSPS 40 CFR Part 60 Subpart IIII.

This is a revision to the application dated July 15, 2016 for the ILC Generator to reflect changes in the final permit.

17.

Page number:	Revision number:	Date of revision:
Page Number 2-2	Minor Modification #7, Rev. 1	September 2016

Table 2-1: Attachment to Ballot to Declare Major Source Fee Choice
Facility Name: Nissan North America, Inc. - Smyrna
File Number: 75-0155

Mixed Actual and Allowable Based Fee Table

Emission Source Description	ESRN	Title V Condition	PM	VOC	NOx	SO2	Non-VOC HAP
Paint Line 1 Body & Frame Pretreat Systems	75-0155-90	E11	NA	**Actual**	NA	NA	NA
Paint Line 1 Frame E-Coat Line	75-0155-07	E12	NA	**Actual**	NA	NA	NA
Paint Line 2 Pretreatment Line	75-0155-89	E21	NA	**Actual**	NA	NA	NA
Paint Line 2 Body E-Coat Line	75-0155-71	E22	NA	**Actual**	NA	NA	NA
Paint Line 2 Stoneguard and Cavity Wax Coating Line	75-0155-68	E23	Allowable	**Actual**	NA	NA	NA
Paint Line 2 Primer Coating Line	75-0155-66	E24	Allowable	**Actual**	NA	NA	NA
Paint Line 2 Topcoat Lines and Touch Up Operations	75-0155-64	E25	Allowable	**Actual**	NA	NA	NA
Paint Line 2 Cavity Wax Booth	75-0155-70	E26	Allowable	**Actual**	NA	NA	NA
Paint Line 2 Undercoat Booth	75-0155-25	E27	Allowable	**Actual**	NA	NA	NA
Fascia Paint Line 2 Plastics Coating Lines	75-0155-62	E32	Allowable	**Actual**	NA	NA	NA
Paint Line 1	75-0155-51	E35	Allowable	**Actual**	NA	NA	NA
Electrolyte Filling and Degassing	75-0155-33	E43	Allowable	**Actual**	NA	NA	NA
Service Parts E-Coat Line	75-0155-72	E41	Allowable	**Actual**	NA	NA	NA
Two Diesel-Fired Emergency RICE Generators	75-0155-37	E44	**Actual**	**Actual**	**Actual**	**Actual**	NA
Battery Sealers and Adhesives	75-0155-39	E45	NA	**Actual**	NA	NA	NA
Miscellaneous Solvent Usage	75-0155-22	E51	NA	**Actual**	NA	NA	NA
Miscellaneous Sealer and Adhesives	75-0155-78	E52	NA	**Actual**	NA	NA	NA
Three Natural Gas Fired Boilers	75-0155-01	E61	**Actual**	**Actual**	**Actual**	**Actual**	NA
Natural Gas Fuel Burning Facility Wide	75-0155-65	E62	**Actual**	**Actual**	**Actual**	**Actual**	NA
Paint Strip House	75-0155-61	E64	Allowable	**Actual**	NA	NA	NA
Frame Welding Process	75-0155-95	E65	Allowable	NA	NA	NA	NA
WWL Preparation Platforms (4) and Spray Booths with Ovens (2)	75-0155-26	E66	Allowable	**Actual**	NA	NA	NA
Facility Wide Gasoline Dispensing	75-0155-83	E67	NA	Allowable	NA	NA	NA
Shot Blasting Operation	75-0155-97	E68	Allowable	NA	NA	NA	NA
Windshield Washer Fluid Operations	75-0155-80	E70	NA	Allowable	NA	NA	NA
Natural Gas Fuel Burning Paint Line 1 and Fascia Paint Line 1 Paint Plants	75-0155-52	E71	**Actual**	**Actual**	**Actual**	**Actual**	NA
Paint Line 1 Natural Gas Generator	75-0155-28	E73	**Actual**	**Actual**	**Actual**	**Actual**	NA
Existing Emergency RICE Engines	75-0155-57	E75	**Actual**	**Actual**	**Actual**	**Actual**	NA
Natural Gas Fuel Burning Battery Assembly Plant	75-0155-56	E46	**Actual**	**Actual**	**Actual**	**Actual**	NA
Shot Blaster for Paint Line 1 with Dust Collector Control	75-0155-54	E69	Allowable	NA	NA	NA	NA
Fascia Paint Line 1 Plastics Parts Coating Line and Touch Up Operations	75-0155-53	E31	Allowable	**Actual**	NA	NA	NA
Two Emergency Diesel-Fired Reciprocation Internal Combustion Engines with Generators at Battery Plant	75-0155-55	E47	**Actual**	**Actual**	**Actual**	**Actual**	NA
ILC Emergency Diesel-Fired Fire Pump	75-0155-103	TBD	**Actual**	**Actual**	**Actual**	**Actual**	NA
ILC Emergency Diesel-Fired Generator	75-0155-99	TBD	**Actual**	**Actual**	**Actual**	**Actual**	NA

NA - Not Applicable, pollutant not emitted from source

Allowable - Nissan has chosen to base emission fees on allowable emissions

Actual - Nissan has chosen to base emission fees on actual emissions

*** Natural Gas Emissions are based on Total Natural Gas used at the facility. Significant and Insignificant emission sources are included in the emission calculations.**

State of Tennessee
Department of Environment and Conservation
Division of Air Pollution Control
William R. Snodgrass Tennessee Tower
312 Rosa L. Parks Avenue, 15th Floor
Nashville, TN 37243
Telephone: (615) 532-0554

TITLE V PERMIT APPLICATION
OPERATIONS AND FLOW DIAGRAMS

1. Please list, identify, and describe briefly process emission sources, fuel burning installations, and incinerators that are contained in this application. Please attach a flow diagram for this application.

ILC Generator, adding a 300KW (480 HP) diesel fired emergency engine to provide emergency power

2. List all insignificant activities which are exempted because of size or production rate and cite the applicable regulations.

See Updated Attachment 1 to APC 2, Table 2-2 Trivial, Categorically Exempt and Insignificant Activities

3. Are there any storage piles?

YES _____ NO X

4. List the states that are within 50 miles of your facility.

None

5. Page number: 2-4 Revision Number: Minor Modification #7, Rev. 1 Date of Revision: September 2016

DESCRIPTION	COMMENTS
Blanking Lines	1200-3-9-.04(5)(f)54. Equipment used exclusively for ... pressing, stamping, ... metals.
Stamping Press Lines	1200-3-9-.04(5)(f)54. Equipment used exclusively for ... pressing, stamping, ... metals.
Die Clean Booths	1200-3-9-.04(5)(a)4.(i) ... potential to emit <5 tons/yr of any regulated air pollutant ... or <1,000 lbs/yr of any HAP.
Stamping Laser Welding	1200-3-9-.04(5)(a)4.(i) ... potential to emit <5 tons/yr of any regulated air pollutant ... or <1,000 lbs/yr of any HAP.
Stamping and Body Shop Quality Assurance Testing	1200-3-9-.04(5)(a)4.(i) ... potential to emit <5 tons/yr of any regulated air pollutant ... or <1,000 lbs/yr of any HAP.
Body Laser Welding	1200-3-9-.04(5)(a)4.(i) ... potential to emit <5 tons/yr of any regulated air pollutant ... or <1,000 lbs/yr of any HAP.
Body Welding	1200-3-9-.04(5)(a)4.(i) ... potential to emit <5 tons/yr of any regulated air pollutant ... or <1,000 lbs/yr of any HAP.
Battery Case Welding Operation	1200-3-9-.04(5)(a)4.(i) ... potential to emit <5 tons/yr of any regulated air pollutant ... or <1,000 lbs/yr of any HAP.
Battery Charging Areas	1200-3-9-.04(5)(g)19. Batteries and battery charging stations, except at battery manufacturing plants.
Body Shop Layout Lab	1200-3-9-.04(5)(f)20. Equipment used for inspection of metal products.
Testing Lab	1200-3-9-.04(5)(f)19. Laboratory equipment…used for chemical and physical analysis....including ventilating and exhaust systems for laboratory hoods…
Zinc Digestion	1200-3-9-.04(5)(f)19. Laboratory equipment…used for chemical and physical analysis....including ventilating and exhaust systems for laboratory hoods…
Aluminum Scrap Shredder	1200-3-9-.04(5)(f)95. Equipment used to process or handle solid materials or solid wastes such as bottle smashers, bulb crushers, balers, compactors, and can punctures.
Paint Line 1 Paint Plant Cooling Tower	1200-3-9-.04(5)(f)15 water cooling towers…potential to emit <5 tons/yr of any regulated air pollutant ... or <1,000 lbs/yr of any HAP.
Paint Line 1 Metal Repair/Offline Booth	1200-3-9-.04(5)(a)4.(i) ... potential to emit <5 tons/yr of any regulated air pollutant ... or <1,000 lbs/yr of any HAP.
Paint Line 1 Cleaning Booth and Body Cavities	1200-3-9-.04(5)(f)18. Blast cleaning equipment ....

DESCRIPTION	COMMENTS
Paint Line 1 Acid Cleaning	1200-3-9-.04(5)(a)4.(i) ... potential to emit <5 tons/yr of any regulated air pollutant ... or <1,000 lbs/yr of any HAP.
Paint Line 1 Reverse Osmosis System	1200-3-9-.04(5)(a)4.(i) ... potential to emit <5 tons/yr of any regulated air pollutant ... or <1,000 lbs/yr of any HAP.
Paint Line 1 Phosphate Laboratory	1200-3-9-.04(5)(f)19. Laboratory equipment…used for chemical and physical analysis....including ventilating and exhaust systems for laboratory hoods…
Paint Line 1 Mix Room Fume Hood	1200-3-9-.04(5)(a)4.(i) ... potential to emit <5 tons/yr of any regulated air pollutant ... or <1,000 lbs/yr of any HAP.
Paint Line 1 Waste Solvent Tank	1200-3-9-.04(5)(a)4.(i) ... potential to emit <5 tons/yr of any regulated air pollutant ... or <1,000 lbs/yr of any HAP.
Paint Line 2 Damp Sand #4	1200-3-9-.04(5)(a)4.(i) ... potential to emit <5 tons/yr of any regulated air pollutant ... or <1,000 lbs/yr of any HAP.
Paint Line 2 Damp Sand #5	1200-3-9-.04(5)(a)4.(i) ... potential to emit <5 tons/yr of any regulated air pollutant ... or <1,000 lbs/yr of any HAP.
Paint Line 2 Damp Sand #6	1200-3-9-.04(5)(a)4.(i) ... potential to emit <5 tons/yr of any regulated air pollutant ... or <1,000 lbs/yr of any HAP.
Paint Line 2 Tutone Sand Booth	1200-3-9-.04(5)(a)4.(i) ... potential to emit <5 tons/yr of any regulated air pollutant ... or <1,000 lbs/yr of any HAP.
Paint Line 2 Major Metal Repair Booth	1200-3-9-.04(5)(a)4.(i) ... potential to emit <5 tons/yr of any regulated air pollutant ... or <1,000 lbs/yr of any HAP.
Paint Line 2 Carrier Cleaner	1200-3-9-.04(5)(f)18. Blast cleaning equipment ....
Paint Line 2 Acid Cleaning System	1200-3-9-.04(5)(a)4.(i) ... potential to emit <5 tons/yr of any regulated air pollutant ... or <1,000 lbs/yr of any HAP.
Paint Line 2 Reverse Osmosis System	1200-3-9-.04(5)(a)4.(i) ... potential to emit <5 tons/yr of any regulated air pollutant ... or <1,000 lbs/yr of any HAP.
Paint Line 2 Phosphate Laboratory	1200-3-9-.04(5)(f)19. Laboratory equipment…used for chemical and physical analysis....including ventilating and exhaust systems for laboratory hoods…

DESCRIPTION	COMMENTS
Paint Line 2 Mix Room Fume Hood	1200-3-9-.04(5)(f)19. Laboratory equipment, ... including ventilating and exhaust systems for laboratory hoods .... Emissions from the System 2 Mix Room are included in the System 2 Paint Plant surface coating emission units.
Component Assembly Lines	1200-3-9-.04(5)(a)4.(i) ... potential to emit <5 tons/yr of any regulated air pollutant ... or <1,000 lbs/yr of any HAP.
Engine Assembly Lines	1200-3-9-.04(5)(a)4.(i) ... potential to emit <5 tons/yr of any regulated air pollutant ... or <1,000 lbs/yr of any HAP.
Component Assembly Rear Axle Welding	1200-3-9-.04(5)(a)4.(i) ... potential to emit <5 tons/yr of any regulated air pollutant ... or <1,000 lbs/yr of any HAP.
Plastics Plant Fascia Molding	1200-3-9-.04(5)(f)24. Equipment used for compression molding ... of plastics ……...
Plastics Plant Extruder in the Repelletizing Operation Area	1200-3-9-.04(5)(f)51. Equipment used exclusively for rolling, forging, pressing, stamping, spinning, or extruding either hot or cold plastics provided hazardous air pollutants are not emitted.
Fascia Paint Line 2 Plastics Pretreatment Line	1200-3-9-.04(5)(a)4.(i) ... potential to emit <5 tons/yr of any regulated air pollutant ... or <1,000 lbs/yr of any HAP.
Fascia Paint Line 2 Sludge Pits	1200-3-9-.04(5)(a)4.(i) ... potential to emit <5 tons/yr of any regulated air pollutant ... or <1,000 lbs/yr of any HAP.
Plastics Plant Gasoline Tank Assembly Line	1200-3-9-.04(5)(a)4.(i) ... potential to emit <5 tons/yr of any regulated air pollutant ... or <1,000 lbs/yr of any HAP.
Fascia Paint Line 2 Subassembly Line	1200-3-9-.04(5)(a)4.(i) ... potential to emit <5 tons/yr of any regulated air pollutant ... or <1,000 lbs/yr of any HAP.
Fascia Paint Line 2 Plastics Test Oven	1200-3-9-.04(5)(a)4.(i) ... potential to emit <5 tons/yr of any regulated air pollutant ... or <1,000 lbs/yr of any HAP.
Fascia Paint Line 2 Plant Mix Room Fume Hood	1200-3-9-.04(5)(f)19. Laboratory equipment, ... including ventilating and exhaust systems for laboratory hoods .... Emissions from the System 3 Plastics Plant Mix Room are included in the System 3 Plastics Plant surface coating emission units.
Fascia Paint Line 2 Deionized Water System	1200-3-9-.04(5)(a)4.(i) ... potential to emit <5 tons/yr of any regulated air pollutant ... or <1,000 lbs/yr of any HAP.
Fascia Paint Line 2 Carrier Cleaning	1200-3-9-.04(5)(f)18. Blast cleaning equipment ....

DESCRIPTION	COMMENTS
Trim & Chassis Miscellaneous Fluid Fill Operations (PSF, Brake Fluid, Coolant Fill, WWF)	1200-3-9-.04(5)(a)4.(i) ... potential to emit <5 tons/yr of any regulated air pollutant ... or <1,000 lbs/yr of any HAP.
Final Repair Spray Gun Cleaner	1200-3-9-.04(5)(a)4.(i) ... potential to emit <5 tons/yr of any regulated air pollutant ... or <1,000 lbs/yr of any HAP.
Vehicle Staging Area	1200-3-9-.04(5)(f)1. Mobile sources ....
Water Test Booths	1200-3-9-.04(5)(f)12. Washing of trucks and vehicles ....
Secondary Water Test Booth	1200-3-9-.04(5)(f)12. Washing of trucks and vehicles ....
Vehicle Storage Area	1200-3-9-.04(5)(f)1. Mobile sources ....
Miscellaneous Touch up Pens/Markers	1200-3-9-.04(5)(a)4.(i) ... potential to emit <5 tons/yr of any regulated air pollutant ... or <1,000 lbs/yr of any HAP.
Emissions Test Lab II - Chassis Dynamometer Test Area	1200-3-9-.04(5)(a)4.(i) ... potential to emit <5 tons/yr of any regulated air pollutant ... or <1,000 lbs/yr of any HAP.
Emissions Test Laboratory II – Gasoline defueling & dispensing for EPA Emissions Test	1200-3-18-.02(4). These regulations do not apply to any equipment used exclusively for … product quality and commercial acceptance…and…total actual emissions…do not exceed 450 lbs in any calendar month. 1200-3-9-.04(5)(a)4.(i) ... potential to emit <5 tons/yr of any regulated air pollutant ... or <1,000 lbs/yr of any HAP.
Service Parts Pretreatment Line	1200-3-9-.04(5)(a)4.(i) ... potential to emit <5 tons/yr of any regulated air pollutant ... or <1,000 lbs/yr of any HAP.
Service Parts Phosphate Lab	1200-3-9-.04(5)(f)19. Laboratory equipment…used for chemical and physical analysis....including ventilating and exhaust systems for laboratory hoods…
Service Parts Acid Cleaning System	1200-3-9-.04(5)(a)4.(i) ... potential to emit <5 tons/yr of any regulated air pollutant ... or <1,000 lbs/yr of any HAP.
Boiler Water Treatment	1200-3-9-.04(5)(f)15. Boiler water treatment operations.
Boiler House	1200-3-9-.04(5)(f)86. Industrial-Commercial-Institutional Steam Generating Facility…not subject to NSPS.
Boiler House Cooling Tower	1200-3-9-.04(5)(f)15 water cooling towers…potential to emit <5 tons/yr of any regulated air pollutant ... or <1,000 lbs/yr of any HAP.
Maintenance Paint Booth in Paint Strip House	1200-3-9-.04(5)(a)4.(i) ... potential to emit <5 tons/yr of any regulated air pollutant ... or <1,000 lbs/yr of any HAP.
Miscellaneous Cooling Towers	1200-3-9-.04(f)15. Water cooling towers...

DESCRIPTION	COMMENTS
Wastewater Treatment Plant	1200-3-9-.04(5)(a)4.(i) ... potential to emit <5 tons/yr of any regulated air pollutant ... or <1,000 lbs/yr of any HAP. Emissions from the Painting Process are included in S1, S2, and S3 surface coating emission units.
Plant-wide Small Maintenance Parts Washers	1200-3-9-.04(5)(f)76. Parts washer where the vapor pressure of cleaners is <1.52 psia. 1200-3-9-.04(4)(d)15,16,22. Degreasing operations… 1200-3-9-.04(5)(a)4.(i) ... potential to emit <5 tons/yr of any regulated air pollutant ... or <1,000 lbs/yr of any HAP.
Training Center Welding, 020100P (75-0155-43)	1200-3-9-.04(5)(a)4.(i) ... potential to emit <5 tons/yr of any regulated air pollutant ... or <1,000 lbs/yr of any HAP.
Training Center Mix Room Fume Hood	1200-3-9-.04(5)(f)19. Laboratory equipment, ... including ventilating and exhaust systems for laboratory hoods .... Emissions from the Training Center Mix Room are included in S1 Topcoat surface coating emission units.
Building Maintenance, Maintenance Activities, Miscellaneous Activities, Maintenance Coating Activities	1200-3-9-.04(5)(f)45. Maintenance activities…
FAB Quality Lab - General Operations including hood	1200-3-9-.04(5)(f)19. Laboratory equipment, ... including ventilating and exhaust systems for laboratory hoods ....
FAB Quality Lab - Plasma Frame Cutting Station including hood	1200-3-9-.04(5)(a)4.(i) ... potential to emit <5 tons/yr of any regulated air pollutant ... or <1,000 lbs/yr of any HAP. 1200-3-9-.04(5)(f)19. Laboratory equipment, ... including ventilating and exhaust systems for laboratory hoods ....
FQC Repair Shop Exhaust System	1200-3-9-.04(5)(a)4.(i) ... potential to emit <5 tons/yr of any regulated air pollutant ... or <1,000 lbs/yr of any HAP.
FQC Machine Shot Blaster	1200-3-9-.04(5)(a)4.(i) ... potential to emit <5 tons/yr of any regulated air pollutant ... or <1,000 lbs/yr of any HAP.
FQC Shop Welding	1200-3-9-.04(5)(f)21…portable, hand operated brazing, soldering, or welding equipment.
FQC Vehicle Repair	1200-3-9-.04(5)(f)45. Maintenance activities…
FQC Motorsports - Chassis Dynamometer Test Area	1200-3-9-.04(5)(a)4.(i) ... potential to emit <5 tons/yr of any regulated air pollutant ... or <1,000 lbs/yr of any HAP.

DESCRIPTION	COMMENTS
FQC Vehicle Exhaust	1200-3-9-.04(5)(a)4.(i) ... potential to emit <5 tons/yr of any regulated air pollutant ... or <1,000 lbs/yr of any HAP.
WWL Body Welding	1200-3-9-.04(5)(a)4.(i) ... potential to emit <5 tons/yr of any regulated air pollutant ... or <1,000 lbs/yr of any HAP.
WWL Spray Gun Cleaning	1200-3-9-.04(5)(a)4.(i) ... potential to emit <5 tons/yr of any regulated air pollutant ... or <1,000 lbs/yr of any HAP.
Propane Cylinder and Aerosol Can De-Pressurization	1200-3-9-.04(5)(a)4.(i) ... potential to emit <5 tons/yr of any regulated air pollutant ... or <1,000 lbs/yr of any HAP.
Plant-wide Storage Tanks (with the exception of all gasoline dispensing tanks and the Windshield Washer Fluid Operations tank)	1200-3-9-.04(5)(a)4.(i) ... potential to emit <5 tons/yr of any regulated air pollutant ... or <1,000 lbs/yr of any HAP.
Battery Assembly Cooling Towers	1200-3-9-.04(5)(f)15 water cooling towers…potential to emit <5 tons/yr of any regulated air pollutant ... or <1,000 lbs/yr of any HAP.
Battery Assembly Roll Slitting Operation	1200-3-9-.04(5)(a)4.(i) ... potential to emit <5 tons/yr of any regulated air pollutant ... or <1,000 lbs/yr of any HAP.
Battery Assembly Roll Drying Operation	1200-3-9-.04(5)(a)4.(i) ... potential to emit <5 tons/yr of any regulated air pollutant ... or <1,000 lbs/yr of any HAP.
Battery Assembly Stacking Operation	1200-3-9-.04(5)(a)4.(i) ... potential to emit <5 tons/yr of any regulated air pollutant ... or <1,000 lbs/yr of any HAP.
Battery Assembly Cell Soaking	1200-3-9-.04(5)(a)4.(i) ... potential to emit <5 tons/yr of any regulated air pollutant ... or <1,000 lbs/yr of any HAP.
Battery Assembly Cell Rolling	1200-3-9-.04(5)(a)4.(i) ... potential to emit <5 tons/yr of any regulated air pollutant ... or <1,000 lbs/yr of any HAP.
Battery Assembly Ink Jet Printing	1200-3-9-.04(5)(a)4.(i) ... potential to emit <5 tons/yr of any regulated air pollutant ... or <1,000 lbs/yr of any HAP.
Battery Assembly Laser Trimming	1200-3-9-.04(5)(a)4.(i) ... potential to emit <5 tons/yr of any regulated air pollutant ... or <1,000 lbs/yr of any HAP.
Battery Assembly Laser Scribing	1200-3-9-.04(5)(a)4.(i) ... potential to emit <5 tons/yr of any regulated air pollutant ... or <1,000 lbs/yr of any HAP.
Miscellaneous Battery Assembly Operations	1200-3-9-.04(5)(a)4.(i) ... potential to emit <5 tons/yr of any regulated air pollutant ... or <1,000 lbs/yr of any HAP.

DESCRIPTION	COMMENTS
Battery Assembly Quality Control Lab	1200-3-9-.04(5)(f)19. Laboratory equipment…used for chemical and physical analysis....including ventilating and exhaust systems for laboratory hoods…
Fascia Paint Line 1 Cleaning Booth	1200-3-9-.04(5)(f)18. Blast cleaning equipment ....
Fascia Paint Line 1 Sludge Pits	1200-3-9-.04(5)(a)4.(i) ... potential to emit <5 tons/yr of any regulated air pollutant ... or <1,000 lbs/yr of any HAP.
Fascia Paint Line 1 Acid Cleaning	1200-3-9-.04(5)(a)4.(i) ... potential to emit <5 tons/yr of any regulated air pollutant ... or <1,000 lbs/yr of any HAP.
Miscellaneous Metal Repairs, Sealers and Adhesives	1200-3-9-.04(5)(a)4.(i) ... potential to emit <5 tons/yr of any regulated air pollutant ... or <1,000 lbs/yr of any HAP.
Smyrna Supplier Park Cooling Tower	1200-3-9-.04(5)(a)4.(i) ... potential to emit <5 tons/yr of any regulated air pollutant ... or <1,000 lbs/yr of any HAP.
Smyrna Supplier Park Resistance Welding	1200-3-9-.04(5)(a)4.(i) ... potential to emit <5 tons/yr of any regulated air pollutant ... or <1,000 lbs/yr of any HAP.
Smyrna Supplier Park, Parts Welding	1200-3-9-.04(5)(a)4.(i) ... potential to emit <5 tons/yr of any regulated air pollutant ... or <1,000 lbs/yr of any HAP.
Battery Assembly Dispenser Rebuilding Hood	1200-3-9-.04(5)(a)4.(i) ... potential to emit <5 tons/yr of any regulated air pollutant ... or <1,000 lbs/yr of any HAP.
Laser Plastic Cutting Operations for FPL1 and FPL2	1200-3-9-.04(5)(a)4.(i) ... potential to emit <5 tons/yr of any regulated air pollutant ... or <1,000 lbs/yr of any HAP.
WWL fueling vehicles not equipped with OBVR	1200-3-9-.04(5)(a)4.(i) ... potential to emit <5 tons/yr of any regulated air pollutant ... or <1,000 lbs/yr of any HAP.
Final Line fueling vehicles not equipped with OBVR	1200-3-9-.04(5)(a)4.(i) ... potential to emit <5 tons/yr of any regulated air pollutant ... or <1,000 lbs/yr of any HAP.
NADIS Final Line Dyno	1200-3-9-.04(5)(a)4.(i) ... potential to emit <5 tons/yr of any regulated air pollutant ... or <1,000 lbs/yr of any HAP.

State of Tennessee
Department of Environment and Conservation
Division of Air Pollution Control
William R. Snodgrass Tennessee Tower
312 Rosa L. Parks Avenue, 15th Floor
Nashville, TN 37243
Telephone: (615) 532-0554

TITLE V PERMIT APPLICATION
EMISSION SUMMARY FOR THE FACILITY OR FOR THE SOURCES CONTAINED IN THIS APPLICATION

GENERAL IDENTIFICATION AND DESCRIPTION

1. Facility name: Nissan North America, Inc. - Smyrna

EMISSIONS SUMMARY TABLE – CRITERIA AND SELECTED POLLUTANTS

2. Complete the following emissions summary for regulated air pollutants at this facility or for the sources contained in this application.

Air Pollutant	Summary of Maximum Allowable Emissions		Summary of Actual Emissions	
	Tons per Year	Reserved for State use (Pounds per Hour- Item 4, APC 28)	Tons per Year	Reserved for State use (Pounds per Hour- Item 4, APC 28)
Particulate Matter (TSP)	132.22		NA	
Sulfur Dioxide	6.45		NA	
Volatile Organic Compounds	2920.27		NA	
Carbon Monoxide	233.36		NA	
Lead	NA		NA	
Nitrogen Oxides	257.00		NA	
Total Reduced Sulfur	NA		NA	
Mercury	NA		NA	
Asbestos	NA		NA	
Beryllium	NA		NA	
Vinyl Chlorides	NA		NA	
Fluorides	NA		NA	
Gaseous Fluorides	NA		NA	
Greenhouse Gases in CO_2 Equivalents	321,423.60		NA	

(Continued on next page)

(Continued from previous page)

EMISSIONS SUMMARY TABLE – HAZARDOUS AIR POLLUTANTS

3. Complete the following emissions summary for regulated air pollutants that are hazardous air pollutant(s) at this facility or for the sources contained in this application.

Air Pollutant & CAS	Summary of Maximum Allowable Emissions		Summary of Actual Emissions	
	Tons per Year	Reserved for State use (Pounds per Hour- Item 5, APC 28)	Tons per Year	Reserved for State use (Pounds per Hour- Item 5, APC 28)
PM HAPs	NA		NA	
Gaseous VOC HAPs	NA		NA	
Gaseous Non VOC HAPs	NA		NA	
Beryllium Compounds	NA		NA	
Hydrogen Chloride	NA		NA	
Hydrogen Fluoride	NA		NA	
Lead Compounds	NA		NA	

4. Page number: 2-13 Revision number: Minor Modification #7, Rev. 1 Date of revision: September 2016

Attachment 1 Table 2-3 for APC V.29 ALLOWABLE EMISSIONS FOR THE NNA-S FACILITY

Emission Source Description	Plant Area	Title V Condition Number	Title V ESRN	Permit Number	PM (lb/hr)	PM (tpy)	VOC (lb/hr)	VOC (tpy)	CO (lb/hr)	CO (tpy)	CO2e (lb/hr)	CO2e (tpy)	(NMHC+)NOx (lb/hr)	(NMHC+)NOx (tpy)	SO2 (lb/hr)	SO2 (tpy)	Beryllium (tpy)	Non-VOC HAP (tpy)	Comments
Paint Line 1 Frame & Body Pretreat Systems	Paint Line 1	E11	75-0155-90	568333	-	-	-	10.00	-	-	-	-	-	-	-	-	-	-	
Paint Line 1 Frame E-Coat Line	Fascia Paint Line 1	E12	75-0155-07	568333	-	-	-	63.00	-	-	-	-	-	-	-	-	-	-	
Paint Line 2 Pretreatment Line	Paint Line 2	E21	75-0155-89	568333	-	-	-	9.53	-	-	-	-	-	-	-	-	-	-	
Paint Line 2 Body E-Coat Line	Paint Line 2	E22	75-0155-71	568333	-	-	-	79.2	-	-	-	-	-	-	-	-	-	-	
Paint Line 2 Stoneguard and Cavity Wax Coating Line	Paint Line 2	E23	75-0155-68	568333	0.02	0.04	-	44.0	-	-	-	-	-	-	-	-	-	-	
Paint Line 2 Primer Coating Line	Paint Line 2	E24	75-0155-66	568333	0.9	3.942	-	258.20	-	-	-	-	-	-	-	-	-	-	
Paint Line 2 Topcoat Lines and Touch Up Operations	Paint Line 2	E25	75-0155-64	568333	1.51	6.614	-	441.6	-	-	-	-	-	-	-	-	-	-	
Paint Line 2 Cavity Wax Booth	Paint Line 2	E26	75-0155-70	568333	0.02	0.1	-	42.2	-	-	-	-	-	-	-	-	-	-	
Paint Line 2 Undercoat Booth	Paint Line 2	E27	75-0155-25	568333	0.07	0.15	-	17.9	-	-	-	-	-	-	-	-	-	-	
Fascia Paint Line 2 Plastics Coating Lines	Fascia Paint Line 2	E32	75-0155-62	568333	5.6	15.8	-	388.8	-	-	-	-	-	-	-	-	-	-	
Paint Line 1	Paint Line 1	E35	75-0155-51	568333	10.33	45.25	-	550.00	-	-	-	-	-	-	-	-	-	-	
Electrolyte Filling and Degassing	Battery Plant	E43	75-0155-33	568333	-	-	-	40.70	-	-	-	-	-	-	-	-	-	-	
Service Parts E-Coat Line	Service Parts	E41	75-0155-72	568333	-	-	-	20.0	-	-	-	-	-	-	-	-	-	-	
Two Diesel-Fired Emergency RICE Generators[1]	Battery Plant	E44	75-0155-37	568333	0.62	0.13	1.32	0.28	10.8	2.3	-	-	19.76	4.2	0.04	0.009	-	-	Total hours of operation limited to 856 hr during all intervals of twelve months
Battery Sealers and Adhesives	Battery Plant	E45	75-0155-39	568333	-	-	-	32.00	-	-	-	-	-	-	-	-	-	-	
Miscellaneous Solvent Usage	Entire Facility	E51	75-0155-22	568333	-	-	-	575.00	-	-	-	-	-	-	-	-	-	-	
Miscellaneous Sealer and Adhesives	Entire Facility	E52	75-0155-78	568333	-	-	-	101.33	-	-	-	-	-	-	-	-	-	-	
Three Natural Gas Fired Boilers	Boiler House	E61	75-0155-01	568333	3.0	13.14	-	3.7	-	50.4	-	72,167	6.25	22.2	1.0	4.38	-	-	
Natural Gas Fuel Burning Facility Wide[2]	Entire Facility	E62	75-0155-65	568333	8.01	11.70	1.93	8.50	29.5	129.3	-	185,151	35.1	153.9	0.42	0.92	-	-	
Paint Strip House	Paint Strip House	E64	75-0155-61	568333	2.02	8.85	-	15.0	-	-	-	-	-	-	-	-	-	-	
Frame Welding Process	Not Operating (Supplier Park)	E65	75-0155-95	568333	1.0	4.38	-	-	-	-	-	-	-	-	-	-	-	-	
WWL Preparation Platforms (4) and Spray Booths with Ovens (2)	WWL	E66	75-0155-26	568333	2.00	8.76	-	8.4	-	-	-	-	-	-	-	-	-	-	
Facility Wide Gasoline Dispensing	Entire Facility	E67	75-0155-83	568333	-	-	-	5.10	-	-	-	-	-	-	-	-	-	-	
Shot Blasting Operation	Paint Strip House	E68	75-0155-97	568333	0.5	2.19	-	-	-	-	-	-	-	-	-	-	-	-	
Windshield Washer Fluid Operations	Trim and Chassis	E70	75-0155-80	568333	-	-	-	1.0	-	-	-	-	-	-	-	-	-	-	
Natural Gas Fuel Burning Paint Line 1 and Fascia Paint Line 1 Paint Plants	Paint Line 1 and Fascia Paint Line 1	E71	75-0155-52	568333	-	3.04	-	2.20	-	33.6	-	48,111	-	34.00	-	0.24	-	-	Natural Gas usage shall not exceed 800 MMcf during all intervals of 12 consecutive months.
Paint Line 1 Natural Gas Generator	Paint Line 1	E73	75-0155-28	568333	0.024	0.006	1.031	0.26	4.125	1.031	-	-	2.063	0.52	0.002	0.0005	-	-	Total hours of operation limited to 500 hr during all intervals of twelve months
Existing Emergency RICE Engines[1]	Entire Facility	E75	75-0155-57	568333	2.86	0.72	4.48	1.12	17.32	4.33	1,154.61	789.96	107.93	26.98	1.73	0.43	-	-	
Natural Gas Fuel Burning Battery Assembly Plant	Battery Plant	E46	75-0155-56	568333	-	0.95	-	0.69	-	10.5	-	15,035	-	12.50	-	0.075	-	-	Natural Gas usage shall not exceed 250 MMcf during all intervals of 12 consecutive months.
Shot Blaster for Paint Line 1 with Dust Collector Control	Paint Line 1	E69	75-0155-54	568333	0.2	0.88	-	-	-	-	-	-	-	-	-	-	-	-	
Fascia Paint Line 1 Plastics Parts Coating Line and Touch Up Operations	Fascia Paint Line 1	E31	75-0155-53	568333	1.25	5.48	-	200.00	-	-	-	-	-	-	-	-	-	-	
Two Emergency Diesel-Fired Reciprocation Internal Combustion Engines with Generators at Battery Plant	Battery Plant	E47	75-0155-55	568333	1.92	0.048	4.1	0.1	33.63	0.84	-	169	61.5	1.5	0.11	0.003	-	-	Total hours of operation limited to 100 hr during all intervals of twelve months
ILC Emergency Fire Pump	ILC	TBD	75-0155-103	568333	0.09	0.023	0.6	0.16	1.50	0.37			1.72	0.4	0.54	0.135	-	-	
ILC Emergency Generator	ILC	TBD	75-0155-99	568333	0.16	0.040	1.2	0.30	2.76	0.69			3.16	0.8	0.99	0.248	-	-	
					42.10	132.22	14.70	2,920.27	99.64	233.36	1,154.61	321,423.60	237.48	257.00	4.83	6.45	-	-	

Notes:
1 - CO2e for emergency RICE engiens is calculated based on CO2 only, equivalence green house gases are not included in calculation.
2 - The facilility has accepted a Natural Gas Limit for Source 65.

Section 37
ILC EMERGENCY GENERATOR (Source 99)

This source is being added through Minor Modification #7. The source should be operational by September of 2016.

APC 5	ILC Emergency Generator Engine Source
APC 3	ILC Emergency Generator Stack
APC 30	Compliance Requirements Spark Ignition
APC 19	Description of Compliance
APC 26	Compliance Demonstration by Recordkeeping
APC 28	Existing Emergency Engines Emissions
Calculations	Emission Calculations

State of Tennessee
Department of Environment and Conservation
Division of Air Pollution Control
William R. Snodgrass Tennessee Tower
312 Rosa L. Parks Avenue, 15th Floor
Nashville, TN 37243
Telephone: (615) 532-0554

TITLE V PERMIT APPLICATION
STATIONARY GAS TURBINE OR INTERNAL COMBUSTION ENGINE

GENERAL IDENTIFICATION AND DESCRIPTION

1. **Facility name:**
Nissan North America, Inc. - Smyrna

2. **Stack ID or flow diagram point identification (s):**
Source 99

GAS TURBINE OR INTERNAL COMBUSTION ENGINE DESCRIPTION

3. List all gas turbines and internal combustion engines at this facility on a separate sheet, and please complete an APC 5 form for each piece of equipment.
ILC Emergency Generator

4. Manufacturer and model number:
Caterpillar Model C9 300kW, 277/480 VOLT, 3 PH Standby Emergency Generator System

5. Equipment description:
Emergency engine to power a generator for emergency power. The engine is planned to be a 480Hp Caterpillar C9 engine and generate 300kW of power.

6. Date of installation or last modification of equipment:
September 2016

7. Rated heat input capacity (in million BTU/Hour) and rated horsepower:
480 HP, 358 KW

State which heating value was utilized:
140,000 MMBtu/hr Higher heating value
N/A Lower heating value

8. If equipment is a gas turbine, list type:
_____ Simple cycle
_____ Regenerative cycle
_____ Combined cycle

9. Location of this fuel burning installation in UTM coordinates: UTM Vertical: _____ UTM Horizontal: _____

10. Normal operating schedule: N/A Hrs./Day N/A Days/Wk. N/A Days/Yr. 500 hr/yr, Emergency Operation

FUEL DESCRIPTION

11. Fuels:	Primary fuel	Backup fuel #1	Backup fuel #2	Backup fuel #3
Fuel name	Diesel			
Actual yearly consumption	1,132 gal/yr			

12. (For NSPS turbines only) Manufacturer's rated heat rate at manufacturer's rated peak load (kilojoules per watt hour), or actual measured heat rate based on lower heating value of fuel as measured at actual peak load for the unit:
N/A

13. Page number: Page 37-2 Revision Number: Minor Modification #7, Rev. 1 Date of Revision: September 2016

State of Tennessee
Department of Environment and Conservation
Division of Air Pollution Control
William R. Snodgrass Tennessee Tower
312 Rosa L. Parks Avenue, 15th Floor
Nashville, TN 37243
Telephone: (615) 532-0554

TITLE V PERMIT APPLICATION
STACK IDENTIFICATION

GENERAL IDENTIFICATION AND DESCRIPTION

1. **Facility name:**
   Nissan North America, Inc. - Smyrna

2. **Emission source (identify):**
   ILC Emergency Generator Diesel Engine

STACK DESCRIPTION

3. Stack ID (or flow diagram point identification):
   Source 99

4. Stack height above grade in feet:
   9 feet

5. Velocity (data at exit conditions):
   487 _____ (Actual feet per second)

6. Inside dimensions at outlet in feet:
   0.33 feet

7. Exhaust flow rate at exit conditions (ACFM):
   2500 ACFM

8. Flow rate at standard conditions (DSCFM):
   1390

9. Exhaust temperature:
   927 _____ Degrees Fahrenheit (°F)

10. Moisture content (data at exit conditions):
    Unknown _____ Percent TBD _____ Grains per dry standard cubic foot (gr./dscf.)

11. Exhaust temperature that is equaled or exceeded during ninety (90) percent or more of the operating time (for stacks subject to diffusion equation only):
    NA _____ (°F)

12. If this stack is equipped with continuous pollutant monitoring equipment required for compliance, what pollutant(s) does this equipment monitor (e.g., Opacity, SO_2, NO_x, etc.)?
    NA

Complete the appropriate APC form(s) 4, 5, 7, 8, 9, or 10 for each source exhausting through this stack.

BYPASS STACK DESCRIPTION

13. Do you have a bypass stack?
    _____ Yes X _____ No

    If yes, describe the conditions which require its use & complete APC form 4 for the bypass stack. Please identify the stack number(s) of flow diagram point number(s) exhausting through this bypass stack.

14. Page number: 37-3 Revision Number: Minor Modification #7, Rev. 1 Date of Revision: September 2016

State of Tennessee
Department of Environment and Conservation
Division of Air Pollution Control
William R. Snodgrass Tennessee Tower
312 Rosa L. Parks Avenue, 15th Floor
Nashville, TN 37243
Telephone: (615) 532-0554

TITLE V PERMIT APPLICATION
CURRENT EMISSIONS REQUIREMENTS AND STATUS

GENERAL IDENTIFICATION AND DESCRIPTION

1. Facility name:	2. Emission source number
Nissan North America, Inc. - Smyrna	Source 99

3. Describe the process emission source / fuel burning installation / incinerator.

ILC Emergency Generator

EMISSIONS AND REQUIREMENTS

4. Identify if only a part of the source is subject to this requirement	5. Pollutant	6. Applicable requirement(s): TN Air Pollution Control Regulations, 40 CFR, permit restrictions, air quality based standards	7. Limitation	8. Maximum actual emissions	9. Compliance status (In/Out)
All	HAP	40 CFR 63 Subpart ZZZZ 40 CFR §63.6590(b)(1)(i)	Initial Notification (only)	Submit Initial Notification (only)	Not Applicable
All	PM	40 CFR 60 Subpart IIII 40 CFR §60.4205(c)	0.20 g/kW-hr	< 0.20 g/kW-hr	Not Applicable
All	NOx + NMHC	40 CFR 60 Subpart IIII 40 CFR §60.4205(b)	4.0 g/kW-hr	< 4.0 g/kW-hr	Not Applicable
All	SO2	TAPCR 1200-03-14-.03(5)	0.82 lb/hr	< 0.82 lb/hr	Not Applicable
All	Sulfur Content	40 CFR 80.5110(b)	15 ppm max	< 15 ppm max	Not Applicable
All	CO	40 CFR 60.4205(b)	3.5 gkW-hr	< 3.5 gkW-hr	Not Applicable

10. Other applicable requirements (new requirements that apply to this source during the term of this permit)

11. Page number:	Revision number:	Date of revision:
37-4	Minor Modification #7, Rev. 1	September 2016

State of Tennessee
Department of Environment and Conservation
Division of Air Pollution Control
William R. Snodgrass Tennessee Tower
312 Rosa L. Parks Avenue, 15th Floor
Nashville, TN 37243
Telephone: (615) 532-0554

TITLE V PERMIT APPLICATION
COMPLIANCE CERTIFICATION - MONITORING AND REPORTING
DESCRIPTION OF METHODS USED FOR DETERMINING COMPLIANCE

All sources that are subject to 1200-03-09-.02(11) of the Tennessee Air Pollution Control Regulations are required to certify compliance with all applicable requirements by including a statement within the permit application of the methods used for determining compliance. This statement must include a description of the monitoring, recordkeeping, and reporting requirements and test methods. In addition, the application must include a schedule for compliance certification submittals during the permit term. These submittals must be no less frequent than annually and may need to be more frequent if specified by the underlying applicable requirement or the Technical Secretary.

GENERAL IDENTIFICATION AND DESCRIPTION

1. Facility name: Nissan North America, Inc. - Smyrna
2. Process emission source, fuel burning installation, or incinerator (identify): ILC Emergency Generator
3. Stack ID or flow diagram point identification(s): Source 99

METHODS OF DETERMINING COMPLIANCE

4. This source as described under Item #2 of this application will use the following method(s) for determining compliance with applicable requirements (and special operating conditions from an existing permit). Check all that apply and attach the appropriate form(s)

[ ] Continuous Emission Monitoring (CEM) - APC 20
Pollutant(s): _____

[ ] Emission Monitoring Using Portable Monitors - APC 21
Pollutant(s): _____

[ ] Monitoring Control System Parameters or Operating Parameters of a Process - APC 22
Pollutant(s): _____

[ ] Monitoring Maintenance Procedures - APC 23
Pollutant(s): _____

[ ] Stack Testing - APC 24
Pollutant(s): _____

[ ] Fuel Sampling & Analysis (FSA) - APC 25
Pollutant(s): _____

[✓] Recordkeeping - APC 26
Pollutant(s): PM, CO, NMHC and NOx

[ ] Other (please describe) - APC 27
Pollutant(s): _____

5. Compliance certification reports will be submitted to the Division according to the following schedule:
Start date: As required by permit
And every 365 days thereafter.

6. Compliance monitoring reports will be submitted to the Division according to the following schedule:
Start date: As required by permit
And every 180 days thereafter.

7. Page number: 37-5 Revision number: Minor Modification #7, Rev. 1 Date of revision: September 2016

State of Tennessee
Department of Environment and Conservation
Division of Air Pollution Control
William R. Snodgrass Tennessee Tower
312 Rosa L. Parks Avenue, 15th Floor
Nashville, TN 37243
Telephone: (615) 532-0554

TITLE V PERMIT APPLICATION
COMPLIANCE DEMONSTRATION BY RECORDKEEPING

Recordkeeping shall be acceptable as a compliance demonstration method provided that a correlation between the parameter value recorded and the applicable requirement is established.

GENERAL IDENTIFICATION AND DESCRIPTION

1. Facility name:
   Nissan North America, Inc. - Smyrna

2. Stack ID or flow diagram point identification(s):
   Source 99

3. Emission source (identify):
   ILC Emergency Generator

MONITORING AND RECORDKEEPING DESCRIPTION

4. Pollutant(s) or parameter being monitored:
   PM, CO, NMHC and NOx

5. Material or parameter being monitored and recorded:
   Operating hours, Maintenance, and Sulfur Content of Fuel

6. Method of monitoring and recording:
   Hours meter
   Monitor maintenance and preventative maintenance (PM) activities.
   Sulfur content of fuel certified by supplier.

7. Compliance demonstration frequency (specify the frequency with which compliance will be demonstrated):
   Monthly log of operating hours

8. Page number: 37-6
   Revision number: Minor Modification #7, Rev. 1
   Date of revision: September 2016

State of Tennessee
Department of Environment and Conservation
Division of Air Pollution Control
William R. Snodgrass Tennessee Tower
312 Rosa L. Parks Avenue, 15th Floor
Nashville, TN 37243
Telephone: (615) 532-0554

TITLE V PERMIT APPLICATION
EMISSIONS FROM PROCESS EMISSION SOURCE / FUEL BURNING INSTALLATION / INCINERATOR

GENERAL IDENTIFICATION AND DESCRIPTION

1. Facility name: Nissan North America, Inc. - Smyrna
2. Stack ID or flow diagram point identification(s): Source 99
3. Process emission source / Fuel burning installation / Incinerator (identify): ILC Emergency Generator

EMISSIONS SUMMARY TABLE – CRITERIA AND FUGITIVE EMISSIONS

4. Complete the following emissions summary for regulated air pollutants. Fugitive emissions shall be included. Attach calculations and emission factor references.

Air Pollutant	Maximum Allowable Emissions		Actual Emissions	
	Tons per Year	Reserved for State use (Pounds per Hour - Item 7, APC 30)	Tons per Year	Reserved for State use (Pounds per Hour- Item 8, APC 30)
Particulate Matter (TSP)	0.04		NA	
(Fugitive Emissions)	NA		NA	
Sulfur Dioxide	0.248		NA	
(Fugitive Emissions)	NA		NA	
Volatile Organic Compounds	0.30		NA	
(Fugitive Emissions)	NA		NA	
Carbon Monoxide	0.69		NA	
(Fugitive Emissions)	NA		NA	
Lead	NA		NA	
(Fugitive Emissions)	NA		NA	
Nitrogen Oxides + NMHC	0.80		NA	
(Fugitive Emissions)	NA		NA	
Total Reduced Sulfur	NA		NA	
(Fugitive Emissions)	NA		NA	
Mercury	NA		NA	
(Fugitive Emissions)	NA		NA	

(Continued on next page)

(Continued from last page)

AIR POLLUTANT	Maximum Allowable Emissions		Actual Emissions	
	Tons per Year	Reserved for State use (Pounds per Hour - Item 7, APC 30)	Tons per Year	Reserved for State use (Pounds per Hour- Item 8, APC 30)
Asbestos	NA		NA	
(Fugitive Emissions)	NA		NA	
Beryllium	NA		NA	
(Fugitive Emissions)	NA		NA	
Vinyl Chloride	NA		NA	
(Fugitive Emissions)	NA		NA	
Fluorides	NA		NA	
(Fugitive Emissions)	NA		NA	
Gaseous Fluorides	NA		NA	
(Fugitive Emissions)	NA		NA	
Greenhouse Gases in CO_2 Equivalents	NA		NA	

EMISSIONS SUMMARY TABLE – FUGITIVE HAZARDOUS AIR POLLUTANTS

5. Complete the following emissions summary for regulated air pollutants that are hazardous air pollutant(s). Fugitive emissions shall be included. Attach calculations and emission factor references.

Air Pollutant & CAS	Maximum Allowable Emissions		Actual Emissions	
	Tons per Year	Reserved for State use (Pounds per Hour - Item 7, APC 30)	Tons per Year	Reserved for State use (Pounds per Hour- Item 8, APC 30)
Particulate HAPs	NA		NA	
Gaseous VOC HAPs	NA		NA	
Gaseous NonVOC HAPs	NA		NA	

6. Page number: 37-8 Revision number: Minor Modification #7, Rev. 1 Date of revision September 2016

ILC Generator

ILC Generator
Manufacturer: **Caterpillar**
Model: **C9, 300 KW**
Year: **2016** Tier 3 Engine Certification from EPA for Caterpillar Engine

Maximum fuel flow:	22.7	gal/hr	From: Caterpillar Electric Power - Technical Spec Sheet
Heat content:	140,000	Btu/gal for diesel	
Heat input capacity:	3.18	MMBtu/hr	
Engine rating:	480	hp	From: Caterpillar Performance Data[DM8168]
Engine output:	358	kW	From: Calculated Based on Hp
Engine Displacement:	9.0	Liters	From: Email from Caterpillar

Pollutant	Emission Rate		Emission Rate		Maximum Hourly Emissions lbs/hr	Fire Pump Engine PTE tpy	Basis for Emission Factors
	Rate	Units	Rate	Units			
PM, PM10 or PM2.5	0.20	g/kW-hr	-	-	0.16	0.040	40 CFR §60.4202(a)(2), §60.4205(b), and Table 1 of 40 CFR 89.112(a)
SO2	-	-	2.05E-03	lb/hp-hr	0.99	0.248	AP-42, Table 3.3-1
NMHC and NOx	4.0	g/kW-hr	2.98	g/hp-hr	3.16	0.80	40 CFR §60.4202(a)(2), §60.4205(b), and Table 1 of 40 CFR 89.112(a)
CO	3.5	g/kW-hr	2.61	g/hp-hr	2.76	0.69	40 CFR §60.4202(a)(2), §60.4205(b), and Table 1 of 40 CFR 89.112(a)
VOCs	-	-	2.51E-03	lb/hp-hr	1.21	0.30	AP-42, Table 3.3-1
HAPs							
Benzene			9.33E-04	lb/MMBtu	3.0E-03	7.4E-04	AP-42, Table 3.3-2
Toluene			4.09E-04	lb/MMBtu	1.3E-03	3.2E-04	AP-42, Table 3.3-2
Xylenes			2.85E-04	lb/MMBtu	9.1E-04	2.3E-04	AP-42, Table 3.3-2
1,3-Butadiene			3.91E-05	lb/MMBtu	1.2E-04	3.1E-05	AP-42, Table 3.3-2
Formaldehyde			1.18E-03	lb/MMBtu	3.8E-03	9.4E-04	AP-42, Table 3.3-2
Acetaldehyde			7.67E-04	lb/MMBtu	2.4E-03	6.1E-04	AP-42, Table 3.3-2
Acrolein			9.25E-05	lb/MMBtu	2.9E-04	7.3E-05	AP-42, Table 3.3-2
Polycyclic Organic Matter (POM) as Polycyclic aromatic Hydrocarbons(PAH)							
Naphthalene			8.48E-05	lb/MMBtu	2.7E-04	6.7E-05	AP-42, Table-3.3-2
Acenaphthylene			5.06E-06	lb/MMBtu	1.6E-05	4.0E-06	AP-42, Table-3.3-2
Acenaphthene			1.42E-06	lb/MMBtu	4.5E-06	1.1E-06	AP-42, Table-3.3-2
Fluorene			2.92E-05	lb/MMBtu	9.3E-05	2.3E-05	AP-42, Table-3.3-2
Phenanthrene			2.94E-05	lb/MMBtu	9.3E-05	2.3E-05	AP-42, Table-3.3-2
Anthracene			1.87E-06	lb/MMBtu	5.9E-06	1.5E-06	AP-42, Table-3.3-2
Fluoranthene			7.61E-06	lb/MMBtu	2.4E-05	6.0E-06	AP-42, Table-3.3-2
Pyrene			4.78E-06	lb/MMBtu	1.5E-05	3.8E-06	AP-42, Table-3.3-2
Benz(a)anthracene			1.68E-06	lb/MMBtu	5.3E-06	1.3E-06	AP-42, Table-3.3-2
Chrysene			3.53E-07	lb/MMBtu	1.1E-06	2.8E-07	AP-42, Table-3.3-2
Benzo(b)fluoranthene			9.91E-08	lb/MMBtu	3.1E-07	7.9E-08	AP-42, Table-3.3-2
Benzo(k)fluoranthene			1.55E-07	lb/MMBtu	4.9E-07	1.2E-07	AP-42, Table-3.3-2
Benzo(a)pyrene			1.88E-07	lb/MMBtu	6.0E-07	1.5E-07	AP-42, Table-3.3-2
Indeno(1,2,3-cd)pyrene			3.75E-07	lb/MMBtu	1.2E-06	3.0E-07	AP-42, Table-3.3-2
Dibenz(a,h)anthracene			5.83E-07	lb/MMBtu	1.9E-06	4.6E-07	AP-42, Table-3.3-2
Benzo(g,h,l)perylene			4.89E-07	lb/MMBtu	1.6E-06	3.9E-07	AP-42, Table-3.3-2
Total POM as PAH			1.68E-04	lb/MMBtu	5.3E-04	1.3E-04	AP-42, Table-3.3-2
TOTAL HAPs					**1.23E-02**	**3.08E-03**	

Conversion factor: 453.5924 g/lb
PTE operating hours: 500 hrs/yr
(Allowed PTE for emergency generators as per the second Title V White Paper. Has also been allowed for other emergency equipment by TDAPC)

NOTES: Emission calculations are based on rule and AP-42 and 40 CFR 60 Subpart IIII.
1. Technical specification information provided by Thompson Power
2. The engine has an Inline-6, 4-stroke-cycle, water-cooled compression ignition design.
3. SO2 emission factor based on AP-42 emission factor, Table 3.3-1, which does not consider a variable sulfur content of diesel fuel.
4. Maximum hourly emissions (lbs/hr) = emission factor (g/hp-hr) x engine rating (hp) ÷ 453.59 g/lb.
5. ILC Generator PTE (tons/yr) = emission rate (lb/hr) x PTE operating hours (hrs/yr) ÷ 2000 lb/ton.
6. CO emission factor is assumed to be the same as for engines that pre-date 2009 models.

Attachment 3

Caterpillar Engine Information

	UNITED STATES ENVIRONMENTAL PROTECTION AGENCY **2016 MODEL YEAR** **CERTIFICATE OF CONFORMITY** **WITH THE CLEAN AIR ACT**	**OFFICE OF TRANSPORTATION** **AND AIR QUALITY** **ANN ARBOR, MICHIGAN 48105**

Certificate Issued To: Caterpillar Inc. (U.S. Manufacturer or Importer) **Certificate Number: GCPXL08.8NZS-001**	**Effective Date:** **07/10/2015** **Expiration Date:** **12/31/2016**	**Byron J. Bunker, Division Director** **Compliance Division**	**Issue Date:** **07/10/2015** **Revision Date:** **N/A**

Model Year: 2016 **Manufacturer Type:** Original Engine Manufacturer **Engine Family:** GCPXL08.8NZS	**Mobile/Stationary Indicator:** Stationary **Emissions Power Category:** 225<=kW<450 **Fuel Type:** Diesel **After Treatment Devices:** No After Treatment Devices Installed **Non-after Treatment Devices:** Electronic Control, Engine Design Modification

Pursuant to Section 111 and Section 213 of the Clean Air Act (42 U.S.C. sections 7411 and 7547) and 40 CFR Part 60, and subject to the terms and conditions prescribed in those provisions, this certificate of conformity is hereby issued with respect to the test engines which have been found to conform to applicable requirements and which represent the following engines, by engine family, more fully described in the documentation required by 40 CFR Part 60 and produced in the stated model year.

This certificate of conformity covers only those new compression-ignition engines which conform in all material respects to the design specifications that applied to those engines described in the documentation required by 40 CFR Part 60 and which are produced during the model year stated on this certificate of the said manufacturer, as defined in 40 CFR Part 60.

It is a term of this certificate that the manufacturer shall consent to all inspections described in 40 CFR 1068 and authorized in a warrant or court order. Failure to comply with the requirements of such a warrant or court order may lead to revocation or suspension of this certificate for reasons specified in 40 CFR Part 60. It is also a term of this certificate that this certificate may be revoked or suspended or rendered void *ab initio* for other reasons specified in 40 CFR Part 60.

This certificate does not cover engines sold, offered for sale, or introduced, or delivered for introduction, into commerce in the U.S. prior to the effective date of the certificate.

THOMPSON

CAT

Thompson Power

SUBMITTAL DATA

FOR

NISSAN
SMYRNA, TENNESSEE

CATERPILLAR MODEL C9
300kW, 277/480 VOLT, 3 PH
STANDBY EMERGENCY
GENERATOR SYSTEM

EQUIPMENT FURNISHED BY:
THOMPSON POWER CORP.
LAVERGNE, TENNESSEE

SUBMITTALS PREPARED BY: DUANE McKEE - PROJECT MANAGER - 06-09-2016
THOMPSON POWER - 1245 BRIDGESTONE BLVD. - LAVERGNE, TN - 37086 - 615/251-8673

THOMPSON

Thompson Power

NISSAN - SMYRNA, TENNESSEE

TABLE OF CONTENTS

1. - BILL OF MATERIAL
2. - CAT C9 300kW GENERATOR SPECIFICATIONS SHEET
3. - C9 SOUND ATTENUATED ENCLOSURE SPEC SHEET
4. - C9 SUB-BASE FUEL TANK
5. - C9 DIP CHART FOR FUEL TANK
6. - C9 DIMENSIONAL DRAWING
7. - GEN SET PERFORMANCE DATA
8. - GENERATOR DATA
9. - EMCP 4.2 GENERATOR SET CONTROLLER
10. - EMCP 4 RS-485 REMOTE ANNUNCIATOR
11. - ADEM A4 ENGINE CONTROLLER
12 . - INTEGRATED VOLTAGE REGULATOR
13. - C9 CIRCUIT BREAKERS
14. - CIRCUIT BREAKER RATINGS
15. - JACKET WATER HEATER
16. - BATTERY CHARGER
17. - START BATTERIES
18. - WIRE PULL LIST
19. - CATERPILLAR WARRANTY STATEMENT

THOMPSON

Thompson Power

1

THOMPSON

Thompson Power

NISSAN , SMYRNA, TN

EQUIPMENT AS FOLLOWS:

1- CATERPILLAR MODEL C9, 300 KW, OUTDOOR, DIESEL, STANDBY, 277/480 VOLT, 60 HERTZ, .8 PF, EMERGENCY GENERATOR SYSTEM PROJECT WITH ACCESSORIES AS FOLLOWS:

EXHAUST SYSTEM
- Exhaust manifold; dry.

AIR INLET SYSTEM
- Aftercooler core.
- Turbocharger.

FUEL SYSTEM
- Primary fuel filter w/integral water separator & secondary filter.
- Fuel cooler.
- Fuel priming pump.
- Flexible fuel lines.
- Engine fuel transfer pump.

GENERATORS AND GENERATOR ATTACHMENTS
- Brushless, PM-excited 2/3 pitch, random wound.
- IP23 Protection.
- Insulation Class H and temperature rise
- Power center, IP22 bottom cable entry
- Segregated low voltage wiring panel

GOVERNING SYSTEM
Cat Electronic Governor (ADEM A4).

LUBE SYSTEM
- Oil cooler.
- Lubricating oil.
- Oil filter and dipstick.
- Oil drain lines with valve; piped to edge of base.
- Fumes disposal; piped to front of radiator.

PROTECTION SYSTEM
Safety shutoffs for:
- High water temperature.
- Overspeed.
- Low oil pressure.

COOLING SYSTEM
- Coolant drain line with valve; terminated on edge of base.
- Fan and belt guards.
- Coolant Level Sensor
- Thermostats and housing, full open temperature 92 deg C (198 deg F).
- Coolant level sight gauge.
- Jacket water pump, gear driven, centrifugal.
- Caterpillar Extended Life Coolant.

STARTING/CHARGING SYSTEM
- 24-volt electric starting motor.
- 24V, 45 amp charging alternator.

GENERAL
- Paint, Caterpillar Yellow.
- Vibration damper.
- Parts book.
- Operation and maintenance manual pack and OMM Storage Compartment
  Wiring diagrams included

PACKAGE SUMMARY
EPA STATIONARY EMERGENCY (EPA TIER 3 EMISSIONS LEVELS).
C9 PACKAGE SUMMARY 60 HZ (480V)

Description
STANDBY POWER
EPA STATIONARY EMERGENCY
UL 2200 LISTED PACKAGE GEN SET
IBC SEISMIC CERT OF COMPLIANCE
60HZ 480 VOLT (WYE)
60 Hz, 300 kW
C9 60Hz 300eKW
LC6114B SE ALT , 105 DEG C @40 DEG C AMB
EMCP4.2 CONTROL PANEL
STANDARD ELECTRONIC GOVERNOR
CONTRO PANEL MOUNTING LEFT
LOCAL ANNUN NFPA99-110/CSA282
QTY 1 REMOTE ANNUNC (ANNR001_S)
600:5 CT RATIO
AUDIO & FUEL ALARM (90% LEVEL)
BREAKER SEPARATION PLATE
DUAL CIRCUIT BREAKER
400A LSI MULT MANUAL 1ST CB
250A LSI MULT MANUAL 2ND CB
POWER CENTER - RH MOUNTED
1ST BREAKER AUXILIARY CONTACTS
2ND BREAKER AUXILIARY CONTACT
SUSE DECALS & FILMS
NEUTRAL BAR NDTS1
NEUTRAL BAR NDTS400
WIDE BASE
1002 GALLON SUB TANK BASE
5 GALLON SPILL CONTAINMENT
GEN MOUNTING DUCT PLATE
L2 SOUND ATTENUATED – WHITE- 71 DBA 23'
STANDARD RADIATOR
CANOPIED SILENCER-INTERNAL
150 MPH IBC CERT WIND ENCLOSUE
STD AIR CLEANER
PERMANENT MAGNET EXCITATION
GEN SPACE HEATER
INTEGRATED VOLTAGE REGULATOR
OVERSIZED WET BATTERY
BATTERY CHARGER 10 AMP DUAL
JACKET WATER HEATER 2KW 240VAC
HEATERS CONTROL GROUP

STD TESTING - GENERATOR SET
CAT DECALS
PGS TEST REPORT @ 0.8 PF
ALTERNATOR TEST REPORT

Description
AC Enclosure Light
OPERATORS MANUALS
SPARE FILTERS

Description
LOT AUTOMATIC TRANSFER SWITCHES 1-150 AMP AND 1-400 AMP, BYPASS ISOLATION, CLOSED TRANSITION, 4 POLE

. WARRANTY 2 YEARS CATERPILLAR, ONE YEAR VENDOR ITEMS PER PUBLISHED WARRANTY STATEMENTS.

. START UP, OWNERS TRAINING AND BUILDING LOAD TESTING INCLUDED, DURING NORMAL WORKING HOURS M-F.

. LOAD BANK TESTING AT 480 VOLT, UNITY PF INCLUDED, DURING NORMAL WORKING HOURS M-F.

THOMPSON

Thompson Power

2

ELECTRIC POWER - Technical Spec Sheet
STANDARD

C9 ACERT
300 ekW/ 375 kVA/ 60 Hz/ 1800 rpm/ 480 V/ 0.8 Power Factor

Rating Type: STANDBY

Emissions: U.S. EPA Certified for Stationary Emergency Use Only (Tier 3 Nonroad Equivalent Emission Standards)

Image shown may not reflect actual configuration

C9 ACERT
300 ekW/ 375 kVA
60 Hz/ 1800 rpm/ 480 V

	Metric	English
Package Performance		
Genset Power Rating with Fan @ 0.8 Power Factor	300 ekW	
Genset Power Rating	375 kVA	
Aftercooler (Separate Circuit)	N/A	N/A
Fuel Consumption		
100% Load with Fan	86.0 L/hr	22.7 gal/hr
75% Load with Fan	66.8 L/hr	17.6 gal/hr
50% Load with Fan	51.5 L/hr	13.6 gal/hr
25% Load with Fan	33.1 L/hr	8.7 gal/hr
Cooling System[1]		
Engine Coolant Capacity	13.9 L	3.7 gal
Inlet Air		
Combustion Air Inlet Flow Rate	26.0 m³/min	916.6 cfm
Max. Allowable Combustion Air Inlet Temp	50 ° C	123 ° F
Exhaust System		
Exhaust Stack Gas Temperature	497.3 ° C	927.2 ° F
Exhaust Gas Flow Rate	69.7 m³/min	2460.9 cfm
Exhaust System Backpressure (Maximum Allowable)	10.0 kPa	40.0 in. water

© 2016 Caterpillar All Rights Reserved

C9 ACERT
300 ekW/ 375 kVA/ 60 Hz/ 1800 rpm/ 480 V/ 0.8 Power Factor

Rating Type: STANDBY

Emissions: U.S. EPA Certified for Stationary Emergency Use Only (Tier 3 Nonroad Equivalent Emission Standards)

Heat Rejection		
Heat Rejection to Jacket Water	120 kW	6838 Btu/min
Heat Rejection to Exhaust (Total)	320 kW	18223 Btu/min
Heat Rejection to Aftercooler	92 kW	5239 Btu/min
Heat Rejection to Atmosphere from Engine	23 kW	1312 Btu/min
Heat Rejection to Atmosphere from Generator	22 kW	1245 Btu/min

Alternator[2]	
Motor Starting Capability @ 30% Voltage Dip	683 skVA
Current	451 amps
Frame Size	LC5014J
Excitation	SE
Temperature Rise	150 ° C

Emissions (Nominal)[3]		
NOx	2196.0 mg/Nm³	4.0 g/hp-hr
CO	115.5 mg/Nm³	0.2 g/hp-hr
HC	23.1 mg/Nm³	0.1 g/hp-hr
PM	12.7 mg/Nm³	0.0 g/hp-hr

DEFINITIONS AND CONDITIONS

1. For ambient and altitude capabilities consult your Cat dealer. Air flow restriction (system) is added to existing restriction from factory.

2. UL 2200 Listed packages may have oversized generators with a different temperature rise and motor starting characteristics. Generator temperature rise is based on a 40° C ambient per NEMA MG1-32.

3. Emissions data measurement procedures are consistent with those described in EPA CFR 40 Part 89, Subpart D & E and ISO8178-1 for measuring HC, CO, PM, NOx. Data shown is based on steady state operating conditions of 77° F, 28.42 in HG and number 2 diesel fuel with 35° API and LHV of 18,390 btu/lb. The nominal emissions data shown is subject to instrumentation, measurement, facility and engine to engine variations. Emissions data is based on 100% load and thus cannot be used to compare to EPA regulations which use values based on a weighted cycle.

© 2016 Caterpillar All Rights Reserved

Rating Type: STANDBY

Emissions: U.S. EPA Certified for Stationary Emergency Use Only (Tier 3 Nonroad Equivalent Emission Standards)

Applicable Codes and Standards:
AS1359, CSA C22.2 No100-04, UL142,UL489, UL869, UL2200,
NFPA37, NFPA70, NFPA99, NFPA110, IBC, IEC60034-1, ISO3046, ISO8528,
NEMA MG1-22,NEMA MG1-33, 2006/95/EC, 2006/42/EC, 2004/108/EC.

Note: Codes may not be available in all model configurations. Please consult your local Cat Dealer representative for availability.

√ **STANDBY:**Output available with varying load for the duration of the interruption of the normal source power. Average power output is 70% of the standby power rating. Typical operation is 200 hours per year, with maximum expected usage of 500 hours per year.

Ratings are based on SAE J1349 standard conditions. These ratings also apply at ISO3046 standard conditions

Fuel Rates are based on fuel oil of 35° API [16° C (60° F)] gravity having an LHV of 42 780 kJ/kg (18,390 Btu/lb) when used at 29° C (85° F) and weighing 838.9 g/liter (7.001 lbs/U.S. gal.). Additional ratings may be available for specific customer requirements, contact your Cat representative for details. For information regarding Low Sulfur fuel and Biodiesel capability, please consult your Cat dealer.

www.Cat-ElectricPower.com

Performance No.: DM8168-04

Feature Code: C09DE48

Generator Arrangement: 4490575

Date: 06/07/2016

Source Country: U.S.

The International System of Units (SI) is used in this publication. CAT, CATERPILLAR, their respective logos, ADEM, EUI, S•O•S, "Caterpillar Yellow" and the "Power Edge" trade dress, as well as corporate and product identity used herein, are trademarks of Caterpillar and may not be used without permission.

© 2016 Caterpillar All Rights Reserved

THOMPSON

CAT

Thompson Power

3

Picture shown may not reflect actual configuration

C9 ACERT™ Sound Attenuated and Weather Protective Enclosures

U.S. Sourced
180-300 kW 60 Hz

Features

Robust/Highly Corrosion Resistant Construction

- Factory-installed on skid base
- Environmentally friendly, polyester powder baked paint
- Zinc plated or stainless steel fasteners
- Internally mounted, critical exhaust silencing system (sound attenuated only)
- Externally front-mounted, enclosed exhaust silencing system (weather protective only)
- Designed and tested to comply with UL 2200 listed generator set package
- Compression door latches providing solid door seal

Excellent Access

- Large cable entry area for installation ease
- Accommodates side-mounted single or multiple breakers
- Two doors on both sides
- Vertically hinged allow 180° opening rotation and retention with door stays
- Lube oil and coolant drains routed to the exterior of the enclosure base

Transportability

- These enclosures are of extremely rugged construction to withstand outdoor exposure and rough handling common on many construction sites.

Security and Safety

- Lockable access doors which give full access to control panel and breaker
- Cooling fan and battery charging alternator fully guarded
- Fuel fill, oil fill, and battery can only be reached via lockable access
- Externally mounted emergency stop button
- Designed for spreader bar lifting to ensure safety
- Stub-up area is rodent proof

Options

- Caterpillar yellow* or white paint
- Weather protective enclosure constructed with 14 gauge steel
- Sound attenuated Level 1 constructed with 14-gauge steel
- Sound attenuated Level 2 constructed with 14-gauge steel
- Sound attenuated enclosure constructed with 12-gauge aluminum (5052 grade)
- UL listed 203 gallon integral fuel tank
- UL listed 660 or 1002 gallon sub-base fuel tanks
- Seismic certification per applicable building codes:
  IBC 2000, IBC 2003, IBC 2006, IBC 2009, IBC 2012, CBC 2007, CBC 2010
- IBC certification for 150 mph wind loading
- Anchoring details are site specific and are dependent on many factors such as generator set size, weight, and concrete strength. IBC certification requires that the anchoring system used is reviewed and approved by a professional engineer.
- Control panel viewing window**

*Not available with aluminum enclosures
**Steel sound attenuated only

Enclosure Sound Pressure Levels at Standby Ratings

Enclosure Type	Standby ekW	Cooling Air Flow Rate		Ambient Capability*		(dBA) @ 7m (23 ft) at 100% Load
		m³/min	cfm	°C	°F	
Sound Attenuated Level 2	300	351	12395	46	115	71
	250	351	12395	53	127	71
	200	351	12395	59	138	71
Sound Attenuated Level 1	300	351	12395	46	115	75
	250	351	12395	53	127	74
	200	351	12395	59	138	74
Weather Protective	300	516	18222	49	120	82
	250	516	18222	55	131	82
	200	516	18222	60	140	82
Aluminum Sound Attenuated	300	351	12395	46	115	73
	250	351	12395	53	127	72
	200	351	12395	59	138	72

*Cooling system performance at sea level. Consult your Cat® dealer for site specific ambient and altitude capabilities.

Enclosure Sound Pressure Levels at Prime Ratings

Enclosure Type	Prime ekW	Cooling Air Flow Rate		Ambient Capability*		(dBA) @ 7m (23 ft) at 100% Load
		m³/min	cfm	°C	°F	
Sound Attenuated Level 2	275	351	12395	50	122	71
	225	351	12395	56	133	71
	180	351	12395	60	140	71
Sound Attenuated Level 1	275	351	12395	50	122	75
	225	351	12395	56	133	74
	180	351	12395	60	140	73
Weather Protective	275	516	18222	52	126	82
	225	516	18222	59	138	82
	180	516	18222	60	140	82
Aluminum Sound Attenuated	275	351	12395	46	115	72
	225	351	12395	56	133	72
	180	351	12395	60	140	72

*Cooling system performance at sea level. Consult your Cat dealer for site specific ambient and altitude capabilities.

The sound pressure level data shown in the tables above is quoted as free field and is for guidance only. Actual levels produced may vary according to site conditions.

Component Weights to Calculate Package Weight

Narrow Skid		Wide Skid		Steel Enclosures						Aluminum Enclosure	
				Weather Protective		Sound Attenuated Level 1		Sound Attenuated Level 2		Sound Attenuated	
kg	lb	kg	lb	kg	lb	kg	lb	kg	lb	kg	lb
219	483	468	1032	660	1455	1062	2341	1062	2341	629	1387

Enclosure on a UL Listed 660 Gallon Sub-base Fuel Tank Base

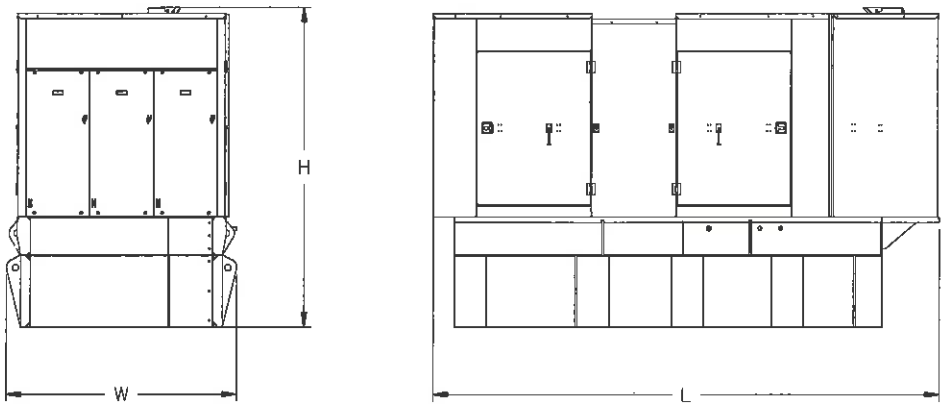

Enclosure Type	Length "L"		Width "W"		Height "H"	
	mm	in	mm	in	mm	in
Sound Attenuated	4515	177.8	2056	80.9	2831	111.5
Weather Protective	4035	158.9	2056	80.9	2777	109.3

Enclosure on a UL Listed 1002 Gallon Sub-base Fuel Tank Base

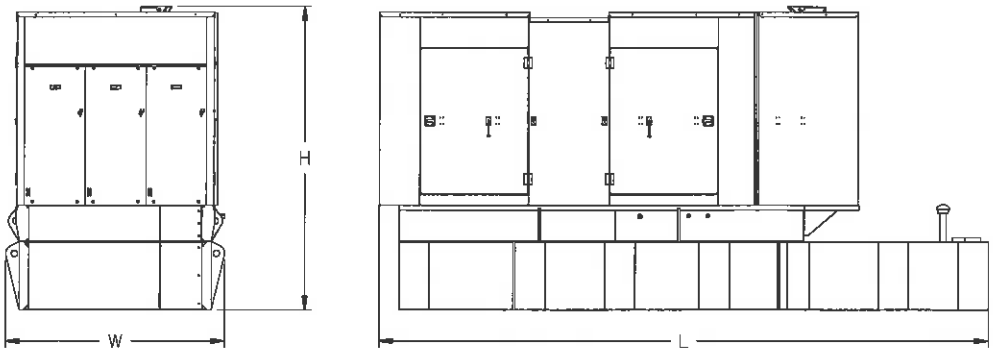

Enclosure Type	Length "L"		Width "W"		Height "H"	
	mm	in	mm	in	mm	in
→ Sound Attenuated	5739	225.9	2056	80.9	2831	111.5
Weather Protective	5739	225.9	2056	80.9	2777	109.3

©2015 Caterpillar
All rights reserved.

Materials and specifications are subject to change without notice. CAT, CATERPILLAR, their respective logos, "Caterpillar Yellow", the "Power Edge" trade dress as well as corporate and product identity used herein, are trademarks of Caterpillar and may not be used without permission.

THOMPSON

Thompson Power

4

C9
Integral and Sub-Base Fuel Tanks

US Sourced
Diesel Generator Set
180 – 300 kW 60 Hz

Picture shown may not represent actual package

Features

- UL Listed for United States (UL 142) and Canada (CAN/ULC S601)
- Facilitate compliance with NFPA 30 code, NFPA 37 and 110 standards and CSA C282 code.
- Dual wall
- Lockable fuel fill cap, 4" (101.6mm) NPT
- Low fuel level warning standard, customer configurable warning or shutdown Primary tank leak detection switch in containment basin
- Tank design provides capacity for thermal expansion of fuel
- Fuel supply dip tube is positioned so as not to pick up fuel sediment
- Fuel return and supply dip tube is separated by an internal baffle to prevent immediate re-supply of heated return fuel
- Pressure washed with an iron phosphate solution
- Interior tank surfaces coated with a solvent-based thin-film rust preventative
- Heavy guage steel gussets with internal lifting rings
- Primary and secondary tanks are leak tested at 20.7 kPa (3 psi) minimum
- Compatible with open packages and enclosures
- Gloss black polyester alkyd enamel exterior paint
- Welded steel containment basin (minimum of 110% of primary tank capacity)
- Direct reading fuel gauge with variable electrical output
- Emergency vents on primary and secondary tanks are sized in accordance with NFPA 30

Sub Base

- The sub-base fuel tank mounts below the generator set wide base

Integral Base

- Integral diesel fuel tank is incorporated into the generator set base frame
- Robust base design includes linear vibration isolators between tank base and engine generator

Options

- Audio/visual fuel level alarm panel
- 5 gal (18.9 L) spill containment
- 5 gal (18.9 L) spill containment with fuel fill drop tube with in 6" (152mm) from bottom of tank
- 5 gal (18.9 L) spill containment with overfill prevention valve and fuel fill drop tube with in 6" (152mm) from bottom of tank
- ULC Listed 7.5 gal (28.4 L) spill containment with vent extensions, vent whistle, and drop tube facilitating compliance with CSA B139-09
- ULC Listed 7.5 gal (28.4 L) spill containment with overfill prevention valve, vent extensions, vent whistle and drop tube facilitating compliance with CSA B139-09

Integral & Sub-Base Fuel Tank Base Capacities with Fuel Tank Dimensions & Weights

Integral – Width (W) 2014 mm (79.3 in)

Sub-base – Width (W) 2056 mm (81.0 in)

Open Set, Weather Protective Enclosure & Sound Attenuated

C9 Tank Design	Feature Code	Total Capacity		Useable Capacity		Tank Only						Overall Package Height with Tank					
						Dry Weight		Height 'H'		Length 'L'		Open		Weather Protective		Sound Attenuated	
		Liter	Gallon	Liter	Gallon	kg	lb	mm	in	mm	in	mm	in	mm	in	mm	in
Integral	FTDW010	784	207	770	203	891	1964	635	25.0	3810	150.0	2360	90.0	2438	96.0	2492	98.1
Sub-Base	FTDW008	2476	654	2435	643	1468	3236	635	25.0	3810	150.0	2699	106.3	2777	109.4	2831	111.5
Sub-Base	FTDW009	3941	1041	3876	1024	1832	4039	635	25.0	5550	219.0	2699	106.3	2777	109.4	2831	111.5
Sub-Base	FTDW012	4285	1132	4221	1115	–	–	686	27.0	5550	219.0	5550	219.0	2750	108.3	2828	111.4

Estimated Run Times (Hours) at 100% Load

C9 Tank Design	Feature Code	Standby Ratings (ekW)			Prime Ratings (ekW)		
		300	250	200	275	225	180
Integral	FTDW010	9	11	13	10	11	14
Sub-Base	FTDW008	28	33	42	30	35	46
Sub-Base	FTDW009	45	53	67	48	56	73
Sub-Base	FTDW012	48	57	72	52	60	79

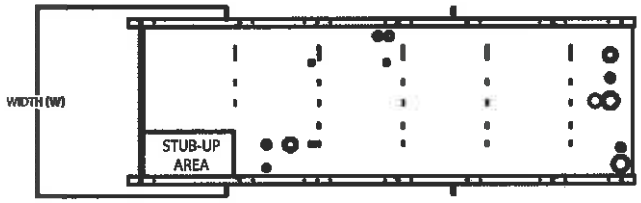

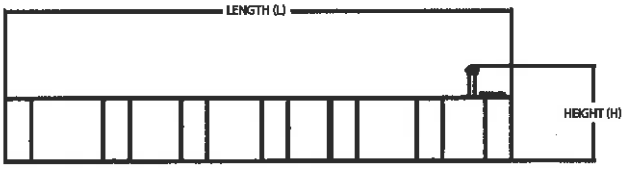

The heights listed above do not include lumber used during manufacturing and shipping.

Tanks with full electrical stub-up area include removable end channel. Tanks with RH/LH stub-up include stub-up area directly below the circuit breaker or power terminal strips. Dimensions include weather-protective enclosure exhaust system.

Dual wall sub-base tanks are UL Listed and constructed in accordance with UL Standard for Safety UL 142, Steel Aboveground Tanks for Flammable and Combustible Liquids and Canada CAN/ULC S601, Standard for Shop Fabricated Steel Aboveground Horizontal Tanks for Flammable and Combustible Liquids.

Fuel tanks and applicable options facilitate compliance with the following United States NFPA Code and Standards:
NFPA 30: Flammable and Combustible Liquids Code
NFPA 37: Standard for the Installation and Use of Stationary Combustion Engines and Gas Turbines
NFPA 110: Standard for Emergency and Standby Power Systems

Fuel tanks and applicable options facilitate compliance with the following Canadian Standard and Code:
CSA C282 – Emergency Electrical Power Supply for Buildings
CSA B139-09 – Installation Code for Oil-Burning Equipment

The following sub-base fuel tanks meet Chicago code for containment and labelling:
FTDW008
FTDW009
FTDW012

www.Cat-ElectricPower.com
©2016 Caterpillar
All rights reserved.

Materials and specifications are subject to change without notice.
CAT, CATERPILLAR, their respective logos, "Caterpillar Yellow",
the "Power Edge" trade dress as well as corporate and product identity used
herein, are trademarks of Caterpillar and may not be used without permission.

THOMPSON

Thompson Power

5

C9
Dip Charts for Fuel Tanks

U.S. Sourced
Diesel Generator Set
180-300 kW 60 Hz

Integral Tank FTDW010				Sub-Base Tank FTDW008			
Inches of Fuel on Dipstick	Measured Gallons	Inches of Fuel on Dipstick	Measured Gallons	Inches of Fuel on Dipstick	Measured Gallons	Inches of Fuel on Dipstick	Measured Gallons
0.5	4.7	13.0	369.8	13.0	122.5	0.5	14.2
1.0	9.4	13.5	384.1	13.5	127.2	1.0	28.4
1.5	14.1	14.0	398.3	14.0	131.9	1.5	42.7
2.0	18.8	14.5	412.5	14.5	136.7	2.0	56.9
2.5	23.6	15.0	426.7	15.0	141.4	2.5	71.1
3.0	28.3	15.5	441.0	15.5	146.1	3.0	85.3
3.5	33.0	16.0	455.2	16.0	150.8	3.5	99.6
4.0	37.7	16.5	469.4	16.5	155.5	4.0	113.8
4.5	42.4	17.0	483.6	17.0	160.2	4.5	128.0
5.0	47.1	17.5	497.9	17.5	164.9	5.0	142.2
5.5	51.8	18.0	512.1	18.0	169.6	5.5	156.5
6.0	56.5	18.5	526.3	18.5	174.4	6.0	170.7
6.5	61.3	19.0	540.5	19.0	179.1	6.5	184.9
7.0	66.0	19.5	554.8	19.5	183.8	7.0	199.1
7.5	70.7	20.0	569.0	20.0	188.5	7.5	213.4
8.0	75.4	20.5	583.2	20.5	193.2	8.0	227.6
8.5	80.1	21.0	597.4	21.0	197.9	8.5	241.8
9.0	84.8	21.5	611.7	21.5	202.6	9.0	256.0
9.5	89.5	22.0	625.9	22.0	207.3	9.5	270.3
10.0	94.2	22.5	640.1			10.0	284.5
10.5	99.0	23.0	654.3			10.5	298.7
11.0	103.7	23.5	668.6			11.0	312.9
11.5	108.4					11.5	327.2
12.0	113.1					12.0	341.4
12.5	117.8					12.5	355.6

Dip Charts

Sub-Base Tank FTDW009				Sub-Base Tank FTDW012			
Inches of Fuel on Dipstick	Measured Gallons	Inches of Fuel on Dipstick	Measured Gallons	Inches of Fuel on Dipstick	Measured Gallons	Inches of Fuel on Dipstick	Measured Gallons
0.5	22.6	13.0	588.5	0.5	22.6	13.0	588.5
1.0	45.3	13.5	611.2	1.0	45.3	13.5	611.2
1.5	67.9	14.0	633.8	1.5	67.9	14.0	633.8
2.0	90.5	14.5	656.5	2.0	90.5	14.5	656.5
2.5	113.2	15.0	679.1	2.5	113.2	15.0	679.1
3.0	135.8	15.5	701.7	3.0	135.8	15.5	701.7
3.5	158.5	16.0	724.4	3.5	158.5	16.0	724.4
4.0	181.1	16.5	747.0	4.0	181.1	16.5	747.0
4.5	203.7	17.0	769.6	4.5	203.7	17.0	769.6
5.0	226.4	17.5	792.3	5.0	226.4	17.5	792.3
5.5	249.0	18.0	814.9	5.5	249.0	18.0	814.9
6.0	271.6	18.5	837.6	6.0	271.6	18.5	837.6
6.5	294.3	19.0	860.2	6.5	294.3	19.0	860.2
7.0	316.9	19.5	882.8	7.0	316.9	19.5	882.8
7.5	339.5	20.0	905.5	7.5	339.5	20.0	905.5
8.0	362.2	20.5	928.1	8.0	362.2	20.5	928.1
8.5	384.8	21.0	950.7	8.5	384.8	21.0	950.7
9.0	407.5	21.5	973.4	9.0	407.5	21.5	973.4
9.5	430.1	22.0	996.0	9.5	430.1	22.0	996.0
10.0	452.7	22.5	1018.6	10.0	452.7	22.5	1018.6
10.5	475.4	23.0	1041.3	10.5	475.4	23.0	1041.3
11.0	498.0			11.0	498.0	23.5	1063.9
11.5	520.6			11.5	520.6	24.0	1086.6
12.0	543.3			12.0	543.3	24.5	1109.2
12.5	565.9			12.5	565.9	25.0	1131.8

www.Cat-ElectricPower.com
©2016 Caterpillar
All rights reserved.

Materials and specifications are subject to change without notice. CAT, CATERPILLAR, their respective logos, "Caterpillar Yellow", the "Power Edge" trade dress as well as corporate and product identity used herein, are trademarks of Caterpillar and may not be used without permission.

THOMPSON

Thompson Power

6

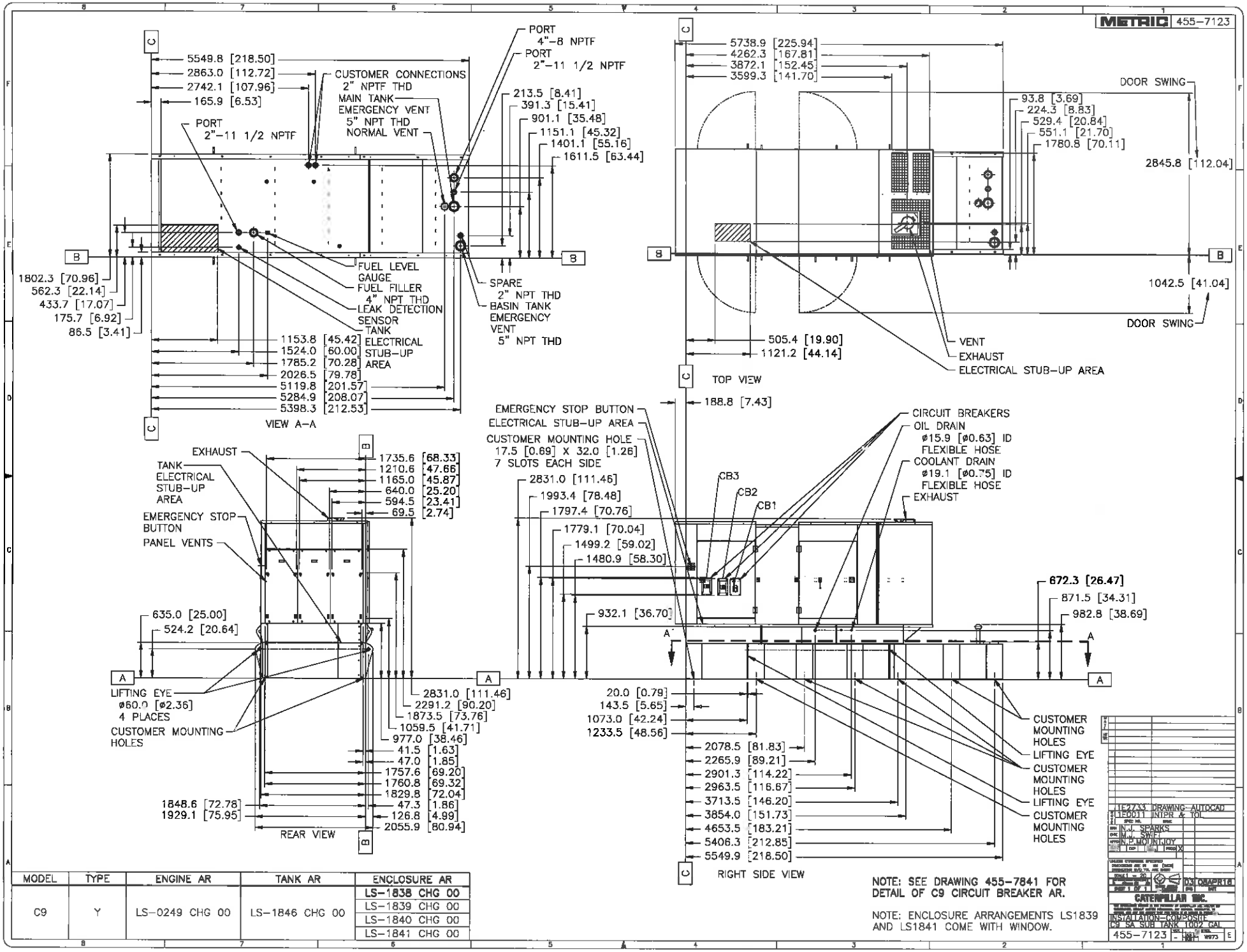

MODEL	TYPE	ENGINE AR	TANK AR	ENCLOSURE AR
C9	Y	LS-0249 CHG 00	LS-1846 CHG 00	LS-1838 CHG 00
				LS-1839 CHG 00
				LS-1840 CHG 00
				LS-1841 CHG 00

THOMPSON

Thompson Power

7

PERFORMANCE DATA[DM8168]

June 8, 2016

Performance Number: DM8168

Change Level: 04

SALES MODEL:	C9	**COMBUSTION:**	DI
ENGINE POWER (BHP):	480	**ENGINE SPEED (RPM):**	1,800
GEN POWER W/O FAN (EKW):	319.0	**HERTZ:**	60
GEN POWER WITH FAN (EKW):	300.0	**FAN POWER (HP):**	36.5
COMPRESSION RATIO:	16.1	**ASPIRATION:**	TA
RATING LEVEL:	STANDBY	**AFTERCOOLER TYPE:**	ATAAC
PUMP QUANTITY:	1	**AFTERCOOLER CIRCUIT TYPE:**	JW+OC, ATAAC
FUEL TYPE:	DIESEL	**INLET MANIFOLD AIR TEMP (F):**	120
MANIFOLD TYPE:	DRY	**JACKET WATER TEMP (F):**	192.2
GOVERNOR TYPE:	ELEC	**TURBO CONFIGURATION:**	SINGLE
CAMSHAFT TYPE:	STANDARD	**TURBO QUANTITY:**	1
IGNITION TYPE:	CI	**TURBOCHARGER MODEL:**	S310-1.25
INJECTOR TYPE:	EUI	**CERTIFICATION YEAR:**	2005
REF EXH STACK DIAMETER (IN):	4	**PISTON SPD @ RATED ENG SPD (FT/MIN):**	1,759.8
MAX OPERATING ALTITUDE (FT):	3,281		

INDUSTRY	SUBINDUSTRY	APPLICATION
ELECTRIC POWER	STANDARD	PACKAGED GENSET

General Performance Data

GENSET POWER WITH FAN	PERCENT LOAD	ENGINE POWER	BRAKE MEAN EFF PRES (BMEP)	BRAKE SPEC FUEL CONSUMPTN (BSFC)	VOL FUEL CONSUMPTN (VFC)	INLET MFLD PRES	INLET MFLD TEMP	EXH MFLD TEMP	EXH MFLD PRES	ENGINE OUTLET TEMP
EKW	%	BHP	PSI	LB/BHP-HR	GAL/HR	IN-HG	DEG F	DEG F	IN-HG	DEG F
300.0	100	480	393	0.332	22.7	82.5	122.6	1,247.3	60.6	927.2
270.0	90	430	352	0.334	20.5	78.7	121.1	1,179.5	55.9	877.6
240.0	80	383	314	0.339	18.5	74.9	121.5	1,120.8	51.5	840.4
225.0	75	361	295	0.342	17.6	73.0	121.6	1,094.5	49.4	826.3
210.0	70	339	277	0.347	16.8	71.0	121.7	1,071.1	47.3	817.6
180.0	60	296	242	0.360	15.2	66.4	121.7	1,028.3	43.1	800.8
150.0	50	253	207	0.376	13.6	61.1	121.7	988.0	38.7	784.5
120.0	40	212	173	0.390	11.8	52.8	121.7	944.9	32.8	768.7
90.0	30	170	139	0.403	9.8	42.5	121.6	899.1	25.9	752.9
75.0	25	149	122	0.411	8.7	36.9	121.6	875.4	22.3	745.0
60.0	20	127	104	0.419	7.6	30.8	121.6	850.8	18.7	737.0
30.0	10	82.9	68	0.441	5.2	17.9	121.5	723.0	11.7	650.3

GENSET POWER WITH FAN	PERCENT LOAD	ENGINE POWER	COMPRESSOR OUTLET PRES	COMPRESSOR OUTLET TEMP	WET INLET AIR VOL FLOW RATE	ENGINE OUTLET WET EXH GAS VOL FLOW RATE	WET INLET AIR MASS FLOW RATE	WET EXH GAS MASS FLOW RATE	WET EXH VOL FLOW RATE (32 DEG F AND 29.98 IN HG)	DRY EXH VOL FLOW RATE (32 DEG F AND 29.98 IN HG)
EKW	%	BHP	IN-HG	DEG F	CFM	CFM	LB/HR	LB/HR	FT3/MIN	FT3/MIN
300.0	100	480	83	450.8	916.6	2,460.9	3,985.8	4,144.9	872.5	798.0
270.0	90	430	80	428.0	893.4	2,308.9	3,884.5	4,028.0	848.2	780.6
240.0	80	383	76	406.4	870.9	2,173.0	3,772.3	3,902.1	821.8	760.2
225.0	75	361	74	396.1	859.8	2,109.4	3,711.7	3,835.1	806.5	747.8
210.0	70	339	72	386.3	846.8	2,047.1	3,649.5	3,766.9	788.0	732.2
180.0	60	296	67	367.7	814.1	1,926.8	3,499.4	3,605.2	751.6	701.1
150.0	50	253	62	350.2	772.8	1,810.5	3,315.8	3,410.8	715.5	669.7
120.0	40	212	54	321.8	707.1	1,643.7	3,018.0	3,100.6	657.9	617.9
90.0	30	170	43	282.8	623.3	1,424.8	2,642.8	2,711.5	577.7	544.3
75.0	25	149	38	260.3	576.0	1,299.8	2,434.3	2,495.5	530.5	500.6
60.0	20	127	31	235.4	524.5	1,162.9	2,209.5	2,262.9	477.8	451.6
30.0	10	82.9	18	178.8	412.8	851.2	1,728.1	1,764.7	377.1	358.8

Heat Rejection Data

GENSET POWER WITH FAN	PERCENT LOAD	ENGINE POWER	REJECTION TO JACKET WATER	REJECTION TO ATMOSPHERE	REJECTION TO EXH	EXHUAST RECOVERY TO 350F	FROM OIL COOLER	FROM AFTERCOOLER	WORK ENERGY	LOW HEAT VALUE ENERGY	HIGH HEAT VALUE ENERGY
EKW	%	BHP	BTU/MIN	BTU/MIN	BTU/MIN	BTU/MIN	BTU/MIN	BTU/MIN	BTU/MIN	BTU/MIN	BTU/MIN
300.0	100	480	6,838	1,312	18,223	10,196	2,598	5,239	20,357	48,785	51,968
270.0	90	430	6,227	1,100	16,530	8,999	2,344	4,774	18,249	44,009	46,881
240.0	80	383	5,718	954	15,163	8,062	2,120	4,304	16,263	39,804	42,402
225.0	75	361	5,492	885	14,576	7,680	2,017	4,080	15,306	37,868	40,339
210.0	70	339	5,288	827	14,082	7,393	1,922	3,868	14,366	36,078	38,432
180.0	60	296	4,912	823	13,054	6,800	1,739	3,448	12,536	32,644	34,774
150.0	50	253	4,565	786	11,966	6,184	1,555	3,034	10,749	29,195	31,100
120.0	40	212	4,219	770	10,567	5,402	1,348	2,419	8,983	25,307	26,959
90.0	30	170	3,811	699	8,973	4,534	1,120	1,706	7,210	21,028	22,400
75.0	25	149	3,554	623	8,129	4,085	999	1,352	6,312	18,747	19,970
60.0	20	127	3,271	492	7,247	3,625	871	1,008	5,399	16,350	17,417
30.0	10	82.9	2,624	519	4,878	2,172	597	397	3,514	11,200	11,931

Emissions Data

RATED SPEED POTENTIAL SITE VARIATION: 1800 RPM

GENSET POWER WITH FAN		EKW	300.0	225.0	150.0	75.0	30.0
PERCENT LOAD		%	100	75	50	25	10
ENGINE POWER		BHP	480	361	253	149	82.9
TOTAL NOX (AS NO2)		G/HR	2,032	1,047	539	288	217
TOTAL CO		G/HR	214	166	242	203	191
TOTAL HC		G/HR	50	54	81	76	65
PART MATTER		G/HR	30.2	29.7	66.7	43.9	28.4
TOTAL NOX (AS NO2)	(CORR 5% O2)	MG/NM3	2,371.7	1,572.5	1,056.2	887.0	1,244.7
TOTAL CO	(CORR 5% O2)	MG/NM3	216.0	218.7	414.7	579.4	974.9
TOTAL HC	(CORR 5% O2)	MG/NM3	43.7	62.4	119.7	182.7	276.3
PART MATTER	(CORR 5% O2)	MG/NM3	24.8	34.3	101.8	98.2	126.1
TOTAL NOX (AS NO2)	(CORR 5% O2)	PPM	1,155	766	514	432	606
TOTAL CO	(CORR 5% O2)	PPM	173	175	332	464	780
TOTAL HC	(CORR 5% O2)	PPM	82	116	223	341	516
TOTAL NOX (AS NO2)		G/HP-HR	4.27	2.92	2.13	1.94	2.61
TOTAL CO		G/HP-HR	0.45	0.46	0.96	1.36	2.30
TOTAL HC		G/HP-HR	0.11	0.15	0.32	0.51	0.79
PART MATTER		G/HP-HR	0.06	0.08	0.26	0.29	0.34
TOTAL NOX (AS NO2)		LB/HR	4.48	2.31	1.19	0.64	0.48
TOTAL CO		LB/HR	0.47	0.37	0.53	0.45	0.42
TOTAL HC		LB/HR	0.11	0.12	0.18	0.17	0.14
PART MATTER		LB/HR	0.07	0.07	0.15	0.10	0.06

RATED SPEED NOMINAL DATA: 1800 RPM

GENSET POWER WITH FAN		EKW	300.0	225.0	150.0	75.0	30.0
PERCENT LOAD		%	100	75	50	25	10
ENGINE POWER		BHP	480	361	253	149	82.9
TOTAL NOX (AS NO2)		G/HR	1,881	970	499	267	201
TOTAL CO		G/HR	115	89	129	109	102
TOTAL HC		G/HR	26	29	43	40	35
TOTAL CO2		KG/HR	225	175	135	86	51
PART MATTER		G/HR	15.5	15.2	34.2	22.5	14.6
TOTAL NOX (AS NO2)	(CORR 5% O2)	MG/NM3	2,196.0	1,456.1	978.0	821.3	1,152.5
TOTAL CO	(CORR 5% O2)	MG/NM3	115.5	117.0	221.7	309.8	521.3
TOTAL HC	(CORR 5% O2)	MG/NM3	23.1	33.0	63.3	96.7	146.2
PART MATTER	(CORR 5% O2)	MG/NM3	12.7	17.6	52.2	50.4	64.7
TOTAL NOX (AS NO2)	(CORR 5% O2)	PPM	1,070	709	476	400	561
TOTAL CO	(CORR 5% O2)	PPM	92	94	177	248	417
TOTAL HC	(CORR 5% O2)	PPM	43	62	118	180	273
TOTAL NOX (AS NO2)		G/HP-HR	3.95	2.70	1.98	1.79	2.42
TOTAL CO		G/HP-HR	0.24	0.25	0.51	0.73	1.23
TOTAL HC		G/HP-HR	0.06	0.08	0.17	0.27	0.42

PERFORMANCE DATA[DM8168]

June 8, 2016

PART MATTER	G/HP-HR	0.03	0.04	0.14	0.15	0.18
TOTAL NOX (AS NO2)	LB/HR	4.15	2.14	1.10	0.59	0.44
TOTAL CO	LB/HR	0.25	0.20	0.29	0.24	0.22
TOTAL HC	LB/HR	0.06	0.06	0.09	0.09	0.08
TOTAL CO2	LB/HR	496	387	297	189	112
PART MATTER	LB/HR	0.03	0.03	0.08	0.05	0.03
OXYGEN IN EXH	%	9.2	11.2	12.6	13.6	15.0
DRY SMOKE OPACITY	%	0.3	0.4	1.0	0.8	0.8
BOSCH SMOKE NUMBER		0.07	0.20	0.90	0.76	0.68

Regulatory Information

EPA TIER 3		2006 - 2010		
GASEOUS EMISSIONS DATA MEASUREMENTS PROVIDED TO THE EPA ARE CONSISTENT WITH THOSE DESCRIBED IN EPA 40 CFR PART 89 SUBPART D AND ISO 8178 FOR MEASURING HC, CO, PM, AND NOX. THE "MAX LIMITS" SHOWN BELOW ARE WEIGHTED CYCLE AVERAGES AND ARE IN COMPLIANCE WITH THE NON-ROAD REGULATIONS.				
Locality	**Agency**	**Regulation**	**Tier/Stage**	**Max Limits - G/BKW - HR**
U.S. (INCL CALIF)	EPA	NON-ROAD	TIER 3	CO: 3.5 NOx + HC: 4.0 PM: 0.20

EPA EMERGENCY STATIONARY		2011 -		
GASEOUS EMISSIONS DATA MEASUREMENTS PROVIDED TO THE EPA ARE CONSISTENT WITH THOSE DESCRIBED IN EPA 40 CFR PART 60 SUBPART IIII AND ISO 8178 FOR MEASURING HC, CO, PM, AND NOX. THE "MAX LIMITS" SHOWN BELOW ARE WEIGHTED CYCLE AVERAGES AND ARE IN COMPLIANCE WITH THE EMERGENCY STATIONARY REGULATIONS.				
Locality	**Agency**	**Regulation**	**Tier/Stage**	**Max Limits - G/BKW - HR**
U.S. (INCL CALIF)	EPA	STATIONARY	EMERGENCY STATIONARY	CO: 3.5 NOx + HC: 4.0 PM: 0.20

Altitude Derate Data

ALTITUDE CORRECTED POWER CAPABILITY (BHP)

AMBIENT OPERATING TEMP (F)	30	40	50	60	70	80	90	100	110	120	130	140	NORMAL
ALTITUDE (FT)													
0	480	480	480	480	480	477	474	465	452	433	412	395	478
1,000	480	480	480	480	477	475	470	457	441	422	402	386	476
2,000	480	480	479	477	474	470	463	446	427	410	392	376	473
3,000	480	478	475	470	463	457	449	434	418	403	386	370	464
4,000	475	469	463	456	450	444	436	422	407	391	374	358	453
5,000	462	456	449	442	436	430	422	408	393	377	360	343	442
6,000	449	442	435	428	422	416	408	394	379	362	346	329	430
7,000	434	428	421	414	408	402	394	379	364	348	332	315	418
8,000	420	413	406	400	394	387	380	365	350	334	318	302	406
9,000	405	398	392	385	379	373	365	350	335	320	305	289	394
10,000	390	384	377	371	365	359	352	337	322	307	293	278	382
11,000	376	369	363	357	351	345	339	334	320	305	291	277	370
12,000	361	355	348	342	337	331	326	320	315	303	288	270	357
13,000	347	340	334	329	323	318	312	307	302	290	274	257	345
14,000	332	326	321	315	310	304	299	294	289	276	261	246	333
15,000	319	313	307	302	297	291	286	282	278	263	249	235	322

Cross Reference

Engine Arrangement			
Arrangement Number	**Effective Serial Number**	**Engineering Model**	**Engineering Model Version**
2531644	S9L00001	GS279	-
3950369	S9P00001	GS279	-
4529865	S9P00001	GS857	LS

Test Specification Data						
Test Spec	**Setting**	**Effective Serial Number**	**Engine Arrangement**	**Governor Type**	**Default Low Idle Speed**	**Default High Idle Speed**
0K6616		S9L00001	2531644			
4150068	PP5547	S9P00001	3950369			
4150068	PP5547	S9P00001	4529865			

Performance Parameter Reference

Parameters Reference:DM9600-08
PERFORMANCE DEFINITIONS

PERFORMANCE DEFINITIONS DM9600

APPLICATION:
Engine performance tolerance values below are representative of a typical production engine tested in a calibrated dynamometer test

PERFORMANCE DATA[DM8168]

cell at SAE J1995 standard reference conditions. Caterpillar maintains ISO9001:2000 certified quality management systems for engine test Facilities to assure accurate calibration of test equipment. Engine test data is corrected in accordance with SAE J1995. Additional reference material SAE J1228, J1349, ISO 8665, 3046-1:2002E, 3046-3:1989, 1585, 2534, 2288, and 9249 may apply in part or are similar to SAE J1995. Special engine rating request (SERR) test data shall be noted.

PERFORMANCE PARAMETER TOLERANCE FACTORS:

Power	+/- 3%
Torque	+/- 3%
Exhaust stack temperature	+/- 8%
Inlet airflow	+/- 5%
Intake manifold pressure-gage	+/- 10%
Exhaust flow	+/- 6%
Specific fuel consumption	+/- 3%
Fuel rate	+/- 5%
Specific DEF consumption	+/- 3%
DEF rate	+/- 5%
Heat rejection	+/- 5%
Heat rejection exhaust only	+/- 10%
Heat rejection CEM only	+/- 10%

Heat Rejection values based on using treated water.

Torque is included for truck and Industrial applications, do not use for Gen Set or steady state applications.

On C7 - C18 engines, at speeds of 1100 RPM and under these values are provided for reference only, and may not meet the tolerance listed.

These values do not apply to C280/3600. For these models, see the tolerances listed below.

C280/3600 HEAT REJECTION TOLERANCE FACTORS:

Heat rejection	+/- 10%
Heat rejection to Atmosphere	+/- 50%
Heat rejection to Lube Oil	+/- 20%
Heat rejection to Aftercooler	+/- 5%

TEST CELL TRANSDUCER TOLERANCE FACTORS:

Torque	+/- 0.5%
Speed	+/- 0.2%
Fuel flow	+/- 1.0%
Temperature	+/- 2.0 C degrees
Intake manifold pressure	+/- 0.1 kPa

OBSERVED ENGINE PERFORMANCE IS CORRECTED TO SAE J1995 REFERENCE AIR AND FUEL CONDITIONS.

REFERENCE ATMOSPHERIC INLET AIR
FOR 3500 ENGINES AND SMALLER
SAE J1228 AUG2002 for marine engines, and J1995 JAN2014 for other engines, reference atmospheric pressure is 100 KPA (29.61 in hg), and standard temperature is 25deg C (77 deg F) at 30% relative humidity at the stated aftercooler water temp, or inlet manifold temp.

FOR 3600 ENGINES
Engine rating obtained and presented in accordance with ISO 3046/1 and SAE J1995 JANJAN2014 reference atmospheric pressure is 100 KPA (29.61 in hg), and standard temperature is 25deg C (77 deg F) at 30% relative humidity and 150M altitude at the stated aftercooler water temperature.

MEASUREMENT LOCATION FOR INLET AIR TEMPERATURE
Location for air temperature measurement air cleaner inlet at stabilized operating conditions.

PERFORMANCE DATA[DM8168]

REFERENCE EXHAUST STACK DIAMETER
The Reference Exhaust Stack Diameter published with this dataset is only used for the calculation of Smoke Opacity values displayed in this dataset. This value does not necessarily represent the actual stack diameter of the engine due to the variety of exhaust stack adapter options available. Consult the price list, engine order or general dimension drawings for the actual stack diameter size ordered or options available.

REFERENCE FUEL
DIESEL
Reference fuel is #2 distillate diesel with a 35API gravity;
A lower heating value is 42,780 KJ/KG (18,390 BTU/LB) when used at 29 (84.2), where the density is 836.9 G/Liter (7.001 Lbs/Gal).

GAS
Reference natural gas fuel has a lower heating value of 33.74 KJ/L (905 BTU/CU Ft). Low BTU ratings are based on 18.64 KJ/L (500 BTU/CU FT) lower heating value gas. Propane ratings are based on 87.56 KJ/L (2350 BTU/CU Ft) lower heating value gas.

ENGINE POWER (NET) IS THE CORRECTED FLYWHEEL POWER (GROSS) LESS EXTERNAL AUXILIARY LOAD
Engine corrected gross output includes the power required to drive standard equipment; lube oil, scavenge lube oil, fuel transfer, common rail fuel, separate circuit aftercooler and jacket water pumps. Engine net power available for the external (flywheel) load is calculated by subtracting the sum of auxiliary load from the corrected gross flywheel out put power. Typical auxiliary loads are radiator cooling fans, hydraulic pumps, air compressors and battery charging alternators. For Tier 4 ratings additional Parasitic losses would also include Intake, and Exhaust Restrictions.

ALTITUDE CAPABILITY
Altitude capability is the maximum altitude above sea level at standard temperature and standard pressure at which the engine could develop full rated output power on the current performance data set.

Standard temperature values versus altitude could be seen on TM2001.

When viewing the altitude capability chart the ambient temperature is the inlet air temp at the compressor inlet.

Engines with ADEM MEUI and HEUI fuel systems operating at conditions above the defined altitude capability derate for atmospheric pressure and temperature conditions outside the values defined, see TM2001.

Mechanical governor controlled unit injector engines require a setting change for operation at conditions above the altitude defined on the engine performance sheet. See your Caterpillar technical representative for non standard ratings.

REGULATIONS AND PRODUCT COMPLIANCE
TMI Emissions information is presented at 'nominal' and 'Potential Site Variation' values for standard ratings. No tolerances are applied to the emissions data. These values are subject to change at any time. The controlling federal and local emission requirements need to be verified by your Caterpillar technical representative.

Customer's may have special emission site requirements that need to be verified by the Caterpillar Product Group engineer.

EMISSIONS DEFINITIONS:
Emissions : DM1176

HEAT REJECTION DEFINITIONS:

PERFORMANCE DATA[DM8168]

Diesel Circuit Type and HHV Balance : DM9500

HIGH DISPLACEMENT (HD) DEFINITIONS:
3500: EM1500

RATING DEFINITIONS:
Agriculture : TM6008

Fire Pump : TM6009

Generator Set : TM6035

Generator (Gas) : TM6041

Industrial Diesel : TM6010

Industrial (Gas) : TM6040

Irrigation : TM5749

Locomotive : TM6037

Marine Auxiliary : TM6036

Marine Prop (Except 3600) : TM5747

Marine Prop (3600 only) : TM5748

MSHA : TM6042

Oil Field (Petroleum) : TM6011

Off-Highway Truck : TM6039

On-Highway Truck : TM6038

SOUND DEFINITIONS:
Sound Power : DM8702

Sound Pressure : TM7080

Date Released : 7/7/15

THOMPSON

Thompson Power

8

GENERATOR DATA

JUNE 08, 2016

For Help Desk Phone Numbers Click here

Selected Model

Engine: C9	**Generator Frame:** LC6114B	**Genset Rating (kW):** 300.0	**Line Voltage:** 480
Fuel: Diesel	**Generator Arrangement:** 4183863	**Genset Rating (kVA):** 375.0	**Phase Voltage:** 277
Frequency: 60	**Excitation Type:** Self Excited	**Pwr. Factor:** 0.8	**Rated Current:** 451.1
Duty: STANDBY	**Connection:** SERIES STAR	**Application:** EPG	**Status:** Current

Version: 41764 /40476 /41800 /10592

Spec Information

Generator Specification

Frame: LC6114B	**Type:** LC	**No. of Bearings:** 1
Winding Type: RANDOM WOUND		**Flywheel:** 14.0
Connection: SERIES STAR		**Housing:** 1
Phases: 3		**No. of Leads:** 12
Poles: 4		**Wires per Lead:** 2
Sync Speed: 1800		**Generator Pitch:** 0.6667

Generator Efficiency

Per Unit Load	kW	Efficiency %
0.25	75.0	89.5
0.5	150.0	92.7
0.75	225.0	93.7
1.0	300.0	93.7

Reactances	Per Unit	Ohms
SUBTRANSIENT - DIRECT AXIS X''_d	0.1156	0.0710
SUBTRANSIENT - QUADRATURE AXIS X''_q	0.1567	0.0963
TRANSIENT - SATURATED X'_d	0.1652	0.1015
SYNCHRONOUS - DIRECT AXIS X_d	2.8711	1.7640
SYNCHRONOUS - QUADRATURE AXIS X_q	1.7227	1.0584
NEGATIVE SEQUENCE X_2	0.1357	0.0834
ZERO SEQUENCE X_0	0.0081	0.0050

Time Constants	Seconds
OPEN CIRCUIT TRANSIENT - DIRECT AXIS T'_{d0}	1.7380
SHORT CIRCUIT TRANSIENT - DIRECT AXIS T'_d	0.1000
OPEN CIRCUIT SUBSTRANSIENT - DIRECT AXIS T''_{d0}	0.0130
SHORT CIRCUIT SUBSTRANSIENT - DIRECT AXIS T''_d	0.0100
OPEN CIRCUIT SUBSTRANSIENT - QUADRATURE AXIS T''_{q0}	0.1100
SHORT CIRCUIT SUBSTRANSIENT - QUADRATURE AXIS T''_q	0.0100
EXCITER TIME CONSTANT T_e	0.0300
ARMATURE SHORT CIRCUIT T_a	0.0150

Short Circuit Ratio: 0.44	Stator Resistance = 0.0163 Ohms	Field Resistance = 0.768 Ohms

Voltage Regulation

Voltage level adustment: +/-	5.0%
Voltage regulation, steady state: +/-	0.5%
Voltage regulation with 3% speed change: +/-	0.5%
Waveform deviation line - line, no load: less than	2.0%
Telephone influence factor: less than	50

Generator Excitation

	No Load	Full Load, (rated) pf	
		Series	**Parallel**
Excitation voltage:	10.2 Volts	41.75 Volts	Volts
Excitation current	1.0 Amps	3.37 Amps	Amps

Selected Model

Engine: C9	**Generator Frame:** LC6114B	**Genset Rating (kW):** 300.0	**Line Voltage:** 480
Fuel: Diesel	**Generator Arrangement:** 4183863	**Genset Rating (kVA):** 375.0	**Phase Voltage:** 277
Frequency: 60	**Excitation Type:** Self Excited	**Pwr. Factor:** 0.8	**Rated Current:** 451.1
Duty: STANDBY	**Connection:** SERIES STAR	**Application:** EPG	**Status:** Current

Version: 41764 /40476 /41800 /10592

Generator Mechanical Information

Center of Gravity

Dimension X	-431.0 mm	-17.0 IN.
Dimension Y	0.0 mm	0.0 IN.
Dimension Z	0.0 mm	0.0 IN.

- "X" is measured from driven end of generator and parallel to rotor. Towards engine fan is positive. See General Information for details
- "Y" is measured vertically from rotor center line. Up is positive.
- "Z" is measured to left and right of rotor center line. To the right is positive.

Generator WT = 996 kg * Rotor WT = 387 kg * Stator WT = 609 kg
2,196 LB 853 LB 1,343 LB

Rotor Balance = 0.0508 mm deflection PTP
Overspeed Capacity = 125% of synchronous speed

Generator Torsional Data

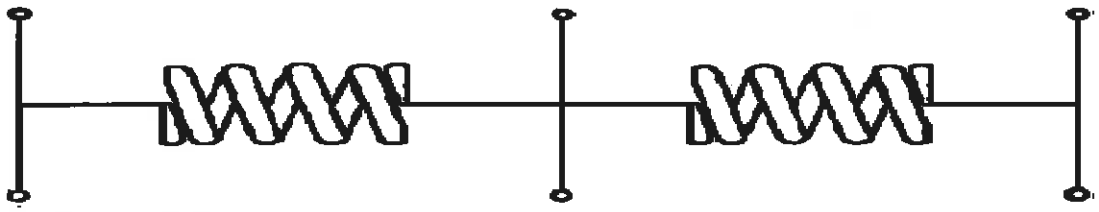

J1 = Coupling and Fan | **J2 = Rotor** | **J3 = Exciter End**

TOTAL J = J1 + J2 + J3

K1 = Shaft Stiffness between J1 + J2 (Diameter 1) | **K2 = Shaft Stiffness between J2 + J3 (Diameter 2)**

J1	K1	Min Shaft Dia 1	J2	K2	Min Shaft Dia 2	J3
17.1 LB IN. s^2	55.5 MLB IN./rad	4.5 IN.	35.4 LB IN. s^2	40.8 MLB IN./rad	4.3 IN.	1.5 LB IN. s^2
1.93 N m s^2	6.27 MN m/rad	115.0 mm	4.0 N m s^2	4.61 MN m/rad	110.0 mm	0.17 N m s^2

Total J
54.0 LB IN. s^2
6.1 N m s^2

Selected Model

Engine: C9	**Generator Frame:** LC6114B	**Genset Rating (kW):** 300.0	**Line Voltage:** 480
Fuel: Diesel	**Generator Arrangement:** 4183863	**Genset Rating (kVA):** 375.0	**Phase Voltage:** 277
Frequency: 60	**Excitation Type:** Self Excited	**Pwr. Factor:** 0.8	**Rated Current:** 451.1
Duty: STANDBY	**Connection:** SERIES STAR	**Application:** EPG	**Status:** Current

Version: 41764 /40476 /41800 /10592

Generator Cooling Requirements - Temperature - Insulation Data

Cooling Requirements:		**Temperature Data: (Ambient 40 ^{0}C)**	
Heat Dissipated:	20.2 kW	**Stator Rise:**	105.0 ^{0}C
Air Flow:	66.0 m^3/min	**Rotor Rise:**	105.0 ^{0}C

Insulation Class: H

Insulation Reg. as shipped: 100.0 MΩ minimum at 40 ^{0}C

Thermal Limits of Generator

Frequency:	60 Hz
Line to Line Voltage:	480 Volts
B BR 80/40	384.0 kVA
F BR -105/40	436.8 kVA
H BR - 125/40	480.0 kVA
F PR - 130/40	480.0 kVA
H PR - 150/40	508.8 kVA
H PR27 - 163/27	528.0 kVA

Selected Model

Engine: C9	**Generator Frame:** LC6114B	**Genset Rating (kW):** 300.0	**Line Voltage:** 480
Fuel: Diesel	**Generator Arrangement:** 4183863	**Genset Rating (kVA):** 375.0	**Phase Voltage:** 277
Frequency: 60	**Excitation Type:** Self Excited	**Pwr. Factor:** 0.8	**Rated Current:** 451.1
Duty: STANDBY	**Connection:** SERIES STAR	**Application:** EPG	**Status:** Current

Version: 41764 /40476 /41800 /10592

Starting Capability & Current Decrement

Motor Starting Capability (0.6 pf)

SKVA	Percent Volt Dip
53	2.5
108	5.0
166	7.5
228	10.0
293	12.5
362	15.0
435	17.5
513	20.0
596	22.5
684	25.0
779	27.5
880	30.0
988	32.5
1,105	35.0
1,232	37.5
1,369	40.0

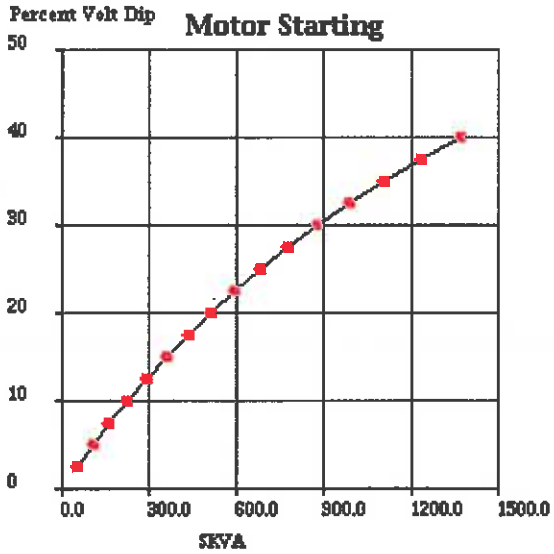

Current Decrement Data

E Time Cycle	AMP
0.0	3,877
1.0	2,556
2.0	2,035
3.0	1,705
4.0	1,444
5.0	1,223
7.5	803
10.0	520
12.5	329
15.0	217
20.0	121
25.0	88
30.0	75
35.0	70
40.0	68
45.0	67

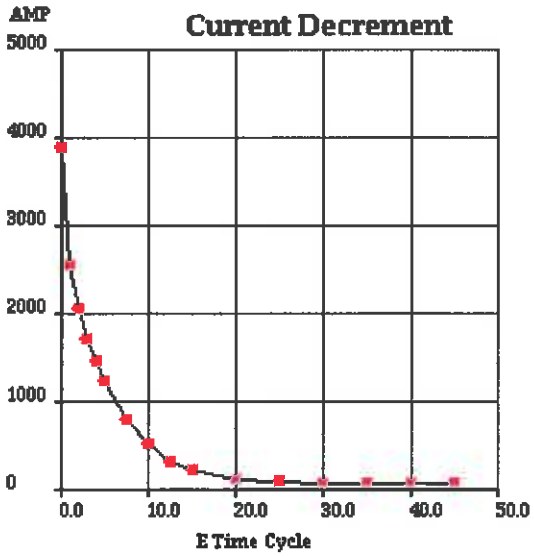

Instantaneous 3 Phase Fault Current: 3877 Amps **Instantaneous Line - Line Fault Current:** 3089 Amps

Instantaneous Line - Neutral Fault Current: 5181 Amps

Selected Model

Engine: C9	**Generator Frame:** LC6114B	**Genset Rating (kW):** 300.0	**Line Voltage:** 480
Fuel: Diesel	**Generator Arrangement:** 4183863	**Genset Rating (kVA):** 375.0	**Phase Voltage:** 277
Frequency: 60	**Excitation Type:** Self Excited	**Pwr. Factor:** 0.8	**Rated Current:** 451.1
Duty: STANDBY	**Connection:** SERIES STAR	**Application:** EPG	**Status:** Current

Version: 41764 /40476 /41800 /10592

Generator Output Characteristic Curves

Open Circuit Curve

Field Current	Line - Line Volt
0.0	0
9.4	288
11.1	336
13.0	384
15.5	432
19.6	480
27.3	528
44.2	576
84.2	624
181.6	672

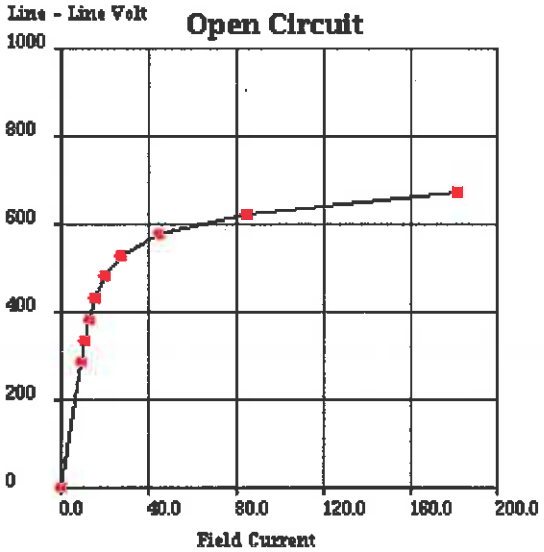

Short Circuit Curve

Field Current	Armature Current
0.0	0
26.6	271
31.0	316
35.5	361
39.9	406
44.3	451
48.8	496
53.2	541
57.6	586
62.1	631

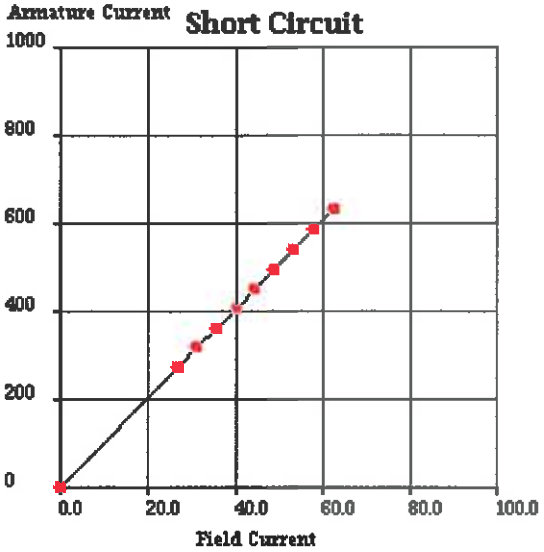

Selected Model

Engine: C9	**Generator Frame:** LC6114B	**Genset Rating (kW):** 300.0	**Line Voltage:** 480
Fuel: Diesel	**Generator Arrangement:** 4183863	**Genset Rating (kVA):** 375.0	**Phase Voltage:** 277
Frequency: 60	**Excitation Type:** Self Excited	**Pwr. Factor:** 0.8	**Rated Current:** 451.1
Duty: STANDBY	**Connection:** SERIES STAR	**Application:** EPG	**Status:** Current

Version: 41764 /40476 /41800 /10592

Generator Output Characteristic Curves

Zero Power Factor Curve

Field Current	Line - Line Volt
44.3	0
53.7	240
55.4	288
57.3	336
59.9	384
64.0	432
71.9	480
89.4	528
130.6	576
231.2	624

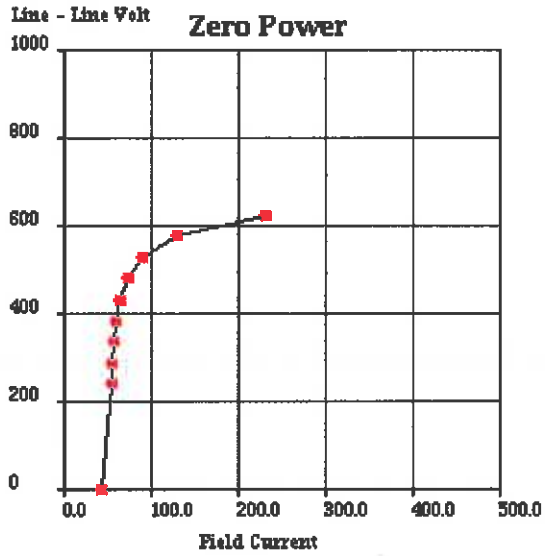

Air Gap Curve

Field Current	Line - Line Volt
0.0	0
9.3	288
10.8	336
12.3	384
13.9	432
15.4	480
17.0	528
18.5	576
20.1	624
21.6	672

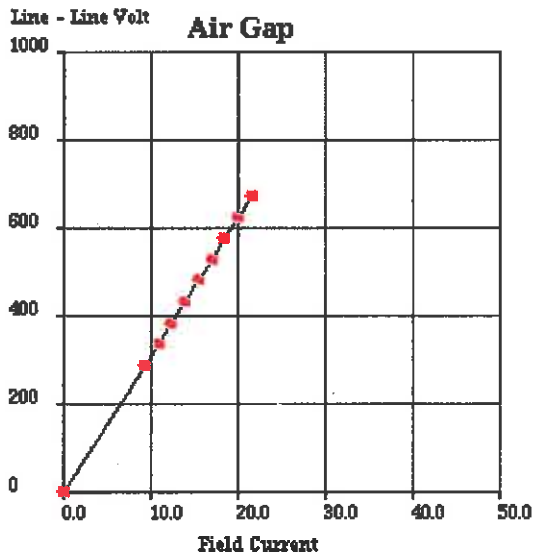

Selected Model

Engine: C9	**Generator Frame:** LC6114B	**Genset Rating (kW):** 300.0	**Line Voltage:** 480
Fuel: Diesel	**Generator Arrangement:** 4183863	**Genset Rating (kVA):** 375.0	**Phase Voltage:** 277
Frequency: 60	**Excitation Type:** Self Excited	**Pwr. Factor:** 0.8	**Rated Current:** 451.1
Duty: STANDBY	**Connection:** SERIES STAR	**Application:** EPG	**Status:** Current

Version: 41764 /40476 /41800 /10592

Reactive Capability Curve

Click to view Chart

Selected Model

Engine: C9	**Generator Frame:** LC6114B	**Genset Rating (kW):** 300.0	**Line Voltage:** 480
Fuel: Diesel	**Generator Arrangement:** 4183863	**Genset Rating (kVA):** 375.0	**Phase Voltage:** 277
Frequency: 60	**Excitation Type:** Self Excited	**Pwr. Factor:** 0.8	**Rated Current:** 451.1
Duty: STANDBY	**Connection:** SERIES STAR	**Application:** EPG	**Status:** Current

Version: 41764 /40476 /41800 /10592

General Information

GENERATOR INFORMATION (DM7900)

---

1. Motor Starting
Motor starting curves are obtained in accordance with IEC60034, and are displayed at 0.6 power factor.

2. Voltage Dip
Prediction of the generator synchronous voltage dip can be made by consulting the plot for the voltage dip value that corresponds to the desired motor starting kVA value.

3. Definitions
A) Generator Keys
Frame: abbreviation of generator frame size
Freq: frequency in hertz.
PP/SB: prime/standby duty respectively
Volts: line - line terminal voltage
kW: rating in electrical kilo watts
Model: engine sales model

B) Generator Temperature Rise
The indicated temperature rises are the IEC/NEMA limits for standby or prime power applications. The quoted rise figures are maximum limits only and are not necessarily indicative of the actual temperature rise of a given machine winding.

C) Centre of Gravity
The specified centre of gravity is for the generator only. For single bearing, and two bearing close coupled generators, the center of gravity is measured from the generator/engine flywheel-housing interface and from the centreline of the rotor Shaft.

For two bearing, standalone generators, the center of gravity is measured from the end of the rotor shaft and from the centerline of the rotor shaft.

D) Generator Current Decrement Curves
The generator current decrement curve indicates the generator armature current arising from a symmetrical three-phase fault at the generator terminals. Generators equipped with AREP or PMG excitation systems will sustain 300% of rated armature current for 10 seconds.

E) Generator Efficiency Curves
The efficiency curve is displayed for the generator only under the given conditions of rating, voltage, frequency and power factor. This is not the overall generating set efficiency curve.

Caterpillar Confidential: **Green**
Content Owner: Commercial Processes Division
Web Master(s): PSG Web Based Systems Support
Current Date: Wednesday, June 08, 2016 8:36:09 AM
© Caterpillar Inc. 2016 All Rights Reserved.
Data Privacy Statement.

THOMPSON

Thompson Power

9

EMCP 4

Image shown may not reflect actual package

EMCP 4.2 GENERATOR SET CONTROLLER

Caterpillar is leading the power generation market place with power solutions engineered to deliver unmatched performance, reliability, durability and cost-effectiveness.

FEATURES

GENERAL DESCRIPTION

The Cat® EMCP 4.2 offers fully featured power metering, protective relaying and engine and generator control and monitoring. Engine and generator controls, diagnostics, and operating information are accessible via the control panel keypads; diagnostics from the EMCP 4 optional modules can be viewed and reset through the EMCP 4.2.

FULL RANGE OF ATTACHMENTS

- Wide range of system expansion attachments, designed specifically to work with the EMCP 4.
- Flexible packaging options for easy and cost effective installation.

WORLD WIDE PRODUCT SUPPORT

- Cat dealers provide extensive pre and post sale support.
- Cat dealers have over 1,600 dealer branch stores operating in 200 countries.

FEATURES

- A 33 x 132 pixel, 3.8 inch, graphical display denotes text alarm/event descriptions, set points, engine and generator monitoring, and is visible in all lighting conditions.
- Textual display with support for 28 languages, including character languages such as Arabic, Chinese, and Japanese.
- Advanced engine monitoring is available on systems with an electronic engine control module.
- Integration with the Cat Digital Voltage Regulator (CDVR) provides enhanced system performance.
- Fully featured power metering, protective relaying, engine and generator parameter viewing, and expanded AC metering are all integrated into this controller.
- Real-time clock allows for date and time stamping of diagnostics and events in the control's logs as well as service maintenance reminders based on engine operating hours or calendar days.
- Up to 40 diagnostic events are stored in the non-volatile memory.
- Ability to view and reset diagnostics on EMCP 4 optional modules via the control panel removes the need for a separate service tool for troubleshooting.
- Set points and software stored in non-volatile memory, preventing loss during a power outage.
- Reduced power mode offers a low power state to minimize battery power requirements.
- Three levels of security allow for configurable operator privileges.
- Selectable units
  - Temperature: °C or °F
  - Pressure: psi, kPa, bar
  - Fuel Consumption: Gal/hr or Liter/hr

STANDARDS

- UL Recognized
- CSA C22.2 No.100,14, 94
- Complies with all necessary standards for CE Certification
  98/37/EC Machinery Directive
  – BS EN 60204-1 Safety of Machinery
  89/336/EEC EMC Directive
  – BS EN 50081-1 Emissions Standard
  – BS EN 50082-2 Immunity Standard
  73/23/EEC Low Voltage Directive
  – EN 50178 LVD Standard
- IEC529, IEC60034-5, IEC61131-3
- MIL STND 461

STANDARD FEATURES

Generator Monitoring	• Voltage (L-L, L-N) • Current (Phase) • Average Volt, Amp, Frequency • kW, kVAr, kVA (Average, Phase, %) • Power Factor (Average, Phase) • kW-hr, kVAr-hr (total) • Excitation voltage and current (with CDVR) • Generator stator and bearing temp (with optional module)
Generator Protection	• Generator phase sequence • Over/Under voltage (27/59) • Over/Under frequency (81 O/U) • Reverse Power (kW) (32) • Reverse Reactive Power (kVAr) (32RV) • Overcurrent (50/51)
Engine Monitoring	• Coolant temperature • Oil pressure • Engine speed (RPM) • Battery voltage • Run hours • Crank attempt and successful start counter • Enhanced engine monitoring (with electronic engines)
Engine Protection	• Control switch not in auto (alarm) • High coolant temp (alarm and shutdown) • Low coolant temp (alarm) • Low coolant level (alarm) • High engine oil temp (alarm and shutdown) • Low, high, and weak battery voltage • Overspeed • Overcrank • Low Oil Pressure
Control	• Run / Auto / Stop control • Speed and voltage adjust • Local and remote emergency stop • Remote start/stop • Cycle crank
Inputs & Outputs	• Two dedicated digital inputs • Six programmable digital inputs • Six programmable form A dry contacts • Two programmable form C dry contacts • Two digital outputs
Communications	• Primary and accessory CAN data links • RS-485 annunciator data link • Modbus RTU (RS-485 Half duplex)
Language Support	Arabic, Bulgarian, Chinese, Czech, Danish, Dutch, English, Estonian, Finnish, French, German, Greek, Hungarian, Icelandic, Italian, Latvian, Lithuanian, Japanese, Norwegian, Polish, Portuguese, Romanian, Russian, Slovak, Slovene, Spanish, Swedish, Turkish
Environmental	• Control module operating temperature: -40°C to 70°C • Display operating temperature: -20°C to 70°C • Humidity: 100% condensing 30°C to 60°C • Storage temperature: -40°C to 85°C • Vibration: Random profile, 24-1000 Hz, 4.3G rms

OPTIONAL MODULES

CAN ANNUNCIATOR

The EMCP 4 CAN Annunciator serves to display genset system alarm conditions and status indications. The annunciator has been designed for use on the accessory communication network and may be used in either local (package mounted) or remote (up to 800 feet) application. A maximum of three annunciators may be used with a single EMCP 4.2.

RS-485 ANNUNCIATOR

The EMCP 4 RS-485 Annunciator serves to display genset system alarm conditions and status indications. The annunciator has been designed for use on the long distance annunciator datalink and is used for remote (up to 4000 feet) application.

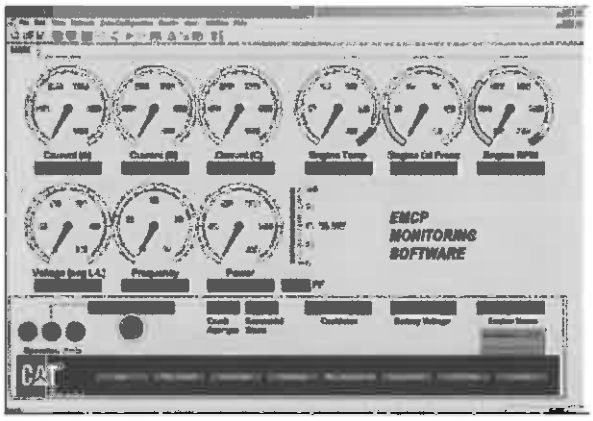

REMOTE MONITORING SOFTWARE

The EMCP 4 remote monitoring software package is a PC based program which allows the user to monitor and control a generator set, and is capable of running on a Windows based operating system. The remote monitoring software allows the user to configure data monitoring and data acquisition processes for monitoring, graphing, and logging of genset data.

THOMPSON

Thompson Power

10

Picture shown may not reflect actual configuration.
Shown with Optional Equipment.

EMCP 4

RS-485 Annunciator

The EMCP 4 RS-485 annunciator serves to display generator set system alarm conditions and status indications. The annunciator has been designed for use on the EMCP 4 RS-485 annunciator data link for remote applications, providing customers with enhanced site flexibility.

The EMCP 4 annunciator is configurable to the standards of NFPA 99/110 for emergency standby generator systems.

Features

- The EMCP 4 annunciator provides sixteen (16) individual points of annunciation, with two (2) LED's included for each point.
- An additional pair of LED's provides status indication of the RS-485 communication network.
- Includes alarm horn with lamp test and alarm acknowledge pushbuttons.
- Configurable to NFPA 99/110 requirements for local and remote annunciation on emergency standby generator systems.
- Provides custom label kit including software for customer's specific alarms and arrangement
- Designed and tested to meet stringent impulse shock and operating vibration requirements
- Uses high quality shielded twisted-triad cable for robust remote communications
- Graphic symbols are provided next to each pair to indicate various alarms and events
- The annunciator can be mounted remotely up to 1200 m (4,000 ft).
- Provides superior visibility of the LED's in direct sunlight.

Specifications

Technical Data

Electrical
- Battery Voltage Functional Range: 9 to 32 VDC
- Power Consumption
  - Maximum: _ 12 watt at 24 VDC
  - Standby: _ 5 watt at 24 VDC
  - Control Power: 12-24 VDC
- Communication: RS-485
- Single, 8-pin Connector
- Alarm
  - Sound Level 80 db

Physical

Weight	2.5 lb or _ 1.13 kg

Environmental

Operating Temperature	–40° C to 70° C –40° F to 158° F
Storage Temperature	–50° C to 70° C –58° F to 158° F
Relative Humidity	90%

Certifications

UL Recognized

LED Color Scheme

Each pair of LED's on the annunciator consists of two of three colors: green, yellow and red, which allows for custom configuration of status, warning and shutdown conditions.

The available colors and combinations are:

Row	LED 1	LED 2
1	Red	Yellow
2	Red	Yellow
3	Red	Yellow
4	Red	Yellow
5	Red	Yellow
6	Red	Green
7	Red	Yellow
8	Red	Yellow
9	Red	Yellow
10	Red	Yellow
11	Red	Yellow
12	Red	Yellow
13	Green	Yellow
14	Green	Yellow
15	Red	Green
16	Red	Yellow

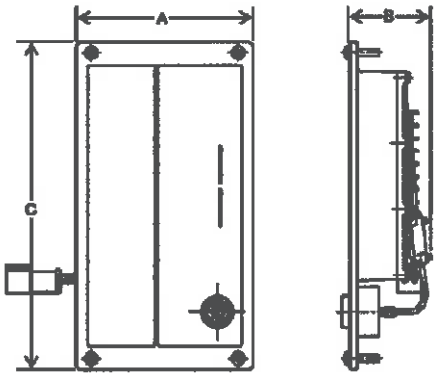

LED Color Scheme

- Emergency stop shutdown
- Overcrank shutdown
- Low coolant temperature warning
- High coolant temperature warning/shutdown
- Low oil pressure warning/shutdown
- Overspeed warning/shutdown
- Low coolant level warning/shutdown
- Low fuel level warning/shutdown
- EPS supplying load status
- Control switch not in auto warning
- High battery voltage warning/shutdown
- Low battery voltage warning/shutdown
- BATT charger AC failure warning/shutdown
- Low cranking voltage
- Engine running
- Tier 4 SCR

Annunciator Dimensions		
A	158 mm	6.22 in
B	60 mm	2.37 in
C	288 mm	11.34 in

Materials and specifications are subject to change without notice.
CAT, CATERPILLAR, their respective logos, "Caterpillar Yellow," the "Power Edge" trade dress as well as corporate and product identity used herein, are trademarks of Caterpillar and may not be used without permission.

©2016 Caterpillar
All rights reserved.

METRIC 471-1721

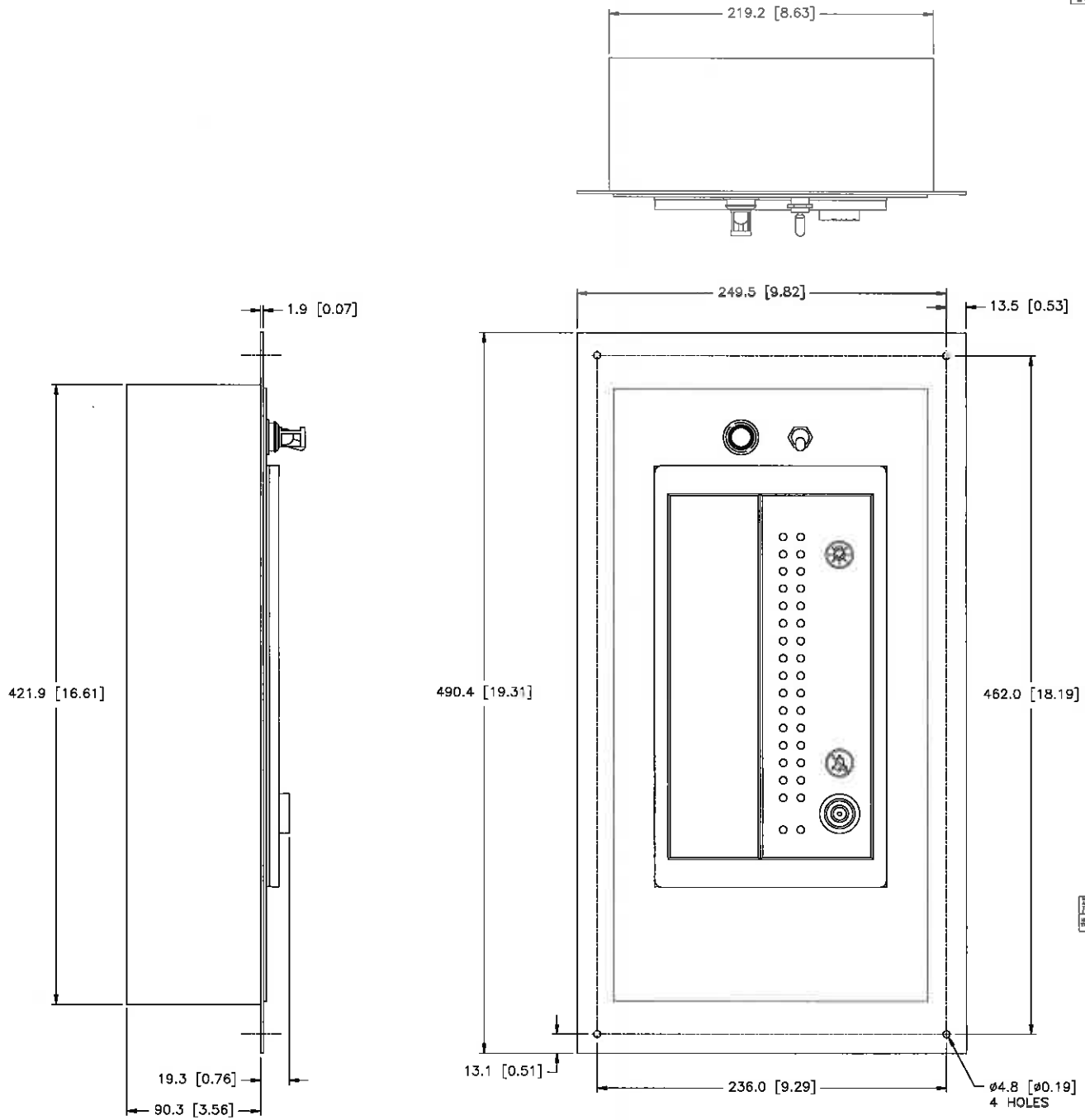

MODEL	TYPE	PRICING AR
C9	Y	373-9473 CHG 01
C15		
C18		
C27	6	
C32		

REV		
7		
6		
5		
4	1E2733	DRAWING - AUTOCAD
3	1E0011	INTPR & TOL
2		
1		
DRN	M.J. SWIFT	
CHK	M.J. SWIFT	
APPD	N.E. MOUNTJOY	
SCALE 1 = 1		
SHEET 1 OF 1		

CO 19SEP14

CATERPILLAR INC.

INSTALLATION-ATTACHMENT
REMOTE ANNUNCIATORS

471-1721 - E

THOMPSON

Thompson Power

11

ENGINE CONTROLLER

ADEM™ A4 Engine Controller

The ADEM™ A4 is the main Electronic Control Module (ECM) used on select diesel engines. The ADEM A4 provides a higher degree of control over a large number of combustion variables. The ADEM A4 is designed to control/interface Electronic Unit Injector (EUI) equipped engines. The ADEM A4 engine system is composed of the ADEM A4 ECM, control software, sensors, actuators, fuel injectors, and interface to the generator system. The prime benefit of an ADEM A4 engine system is to better control and maintain the particulate emissions, both steady state and transient, while improving engine performance

FEATURES

RELIABLE, DURABLE

All ADEM A4 controllers are designed to survive the harshest environments.

- Environmentally sealed, die-cast aluminum housing isolates and protects electronic components from moisture and dirt contamination.
- Rigorous vibration testing ensures product reliability and durability.
- Accuracy maintained from −40° C to 85° C
- Electrical noise immunity to 100 volts/meter
- Internal circuits are designed to withstand shorts to +battery and −battery.

SIMPLE SERVICING

Each ADEM A4 system works in combination with the Cat® ET service tool software to keep the engine operating at peak performance.

- Displays measured parameters
- Retrieves active and logged event code documenting abnormal system operation
- Performs calibrations and diagnostic tests
- Supports flash programming of new software into the ADEM A4 ECM

SELF DIAGNOSTICS

Each ADEM A4 ECM has a full compliment of diagnostics. The ECM can detect faults in the electrical system and report those faults to the service technician for quick repair.

- Self-diagnostic capability pinpoints operational problems in need of attention.

ADVANCED FEATURES

- Enhanced performance from fuel injection timing and limiting
- Adjustable monitoring of vital engine parameters
- Programmable speed acceleration ramp rate
- Data link interfaces

ENGINE CONTROLLER

DESCRIPTION

The ECM is housed in an environmentally sealed casting. All wiring connections to the ECM are made using two sealed connectors: a single seventy-pin connector and a single one hundred twenty-pin connector.

ENGINE SPEED GOVERNING

Desired engine speed is calculated by the ECM and held within ±0.2 Hz for isochronous and droop mode. The ECM accounts for droop that is requested. The proper amount of fuel is sent to the injectors due to these calculations. The ECM also employs cooldown/shutdown strategies, acceleration delays on startup, acceleration ramp times and speed reference.

FUEL LIMITING

Warm and cold fuel-air ratio control limits are controlled by the ECM. Electronic monitoring system derates, torque limit, and cranking limit, programmable torque scaling, and cold cylinder cutout mode are standard features.

FUEL INJECTION TIMING

Master timing for injection is controlled by the ECM control. Temperature dependencies are accounted for in the fuel injection calculations.

ELECTRONIC MONITORING

Electronic monitoring of vital engine parameters can be programmed. Warning, derate, and shutdown event conditions may be customized by the user.

INFORMATION MANAGEMENT

The ECM stores information to assist with electronic troubleshooting. Active and logged diagnostic codes, active events, logged events, fuel consumption, engine hours, and instantaneous totals aid service technicians when diagnosing electronic faults and scheduling preventive maintenance.

CALIBRATIONS

Engine performance is optimized through injection timing. Auto/manual sensor calibrations are standard features.

ON-BOARD SYSTEM TESTS

System tests are available to assist in electronic troubleshooting. These tests include: injector activation, injector cutout, and override of control outputs.

DATA LINK INTERFACES

The ADEM A4 communicates with the EMCP via a dedicated communication network.

ELECTRONIC SENSING

The following sensing is available on the ADEM A4: oil pressure, fuel pressure, fuel temperature, atmospheric pressure, air inlet temperature, turbo outlet pressure, engine coolant temperature, engine speed, throttle, position, exhaust temperature, oil filter pressure differential, fuel filter pressure differential, air filter pressure differential and crankcase pressure.

ENGINE CONTROLLER

SPECIFICATIONS

Impervious to:
salt spray, fuel, oil and oil additives, coolant, spray cleaners, chlorinated solvents, hydrogen sulfide and methane gas, and dust

Input and output protection
all inputs and outputs are protected against short circuits to +battery and −battery

Input voltage range (24 VDC nominal)
18 to 32 VDC

Mounting
engine mounted

Reverse polarity protected

Shock, withstands 20 g

Temperature range
Operating: −40° C to 85° C (−40° F to 185° F)
Storage: −50° C to 120° C (−58° F to 248° F)

Vibration
withstands 8.0 g @ 24 to 2 kHz

This page is intentionally left blank

Materials and specifications are subject to change without notice.
CAT, CATERPILLAR, their respective logos, "Caterpillar Yellow," the "Power Edge" trade dress as well as corporate and product identity used herein, are trademarks of Caterpillar and may not be used without permission.

LEHE5347-01 (08/13)

© 2013 Caterpillar
All Rights Reserved.
Printed in U.S.A.

THOMPSON

Thompson Power

12

INTEGRATED VOLTAGE REGULATOR

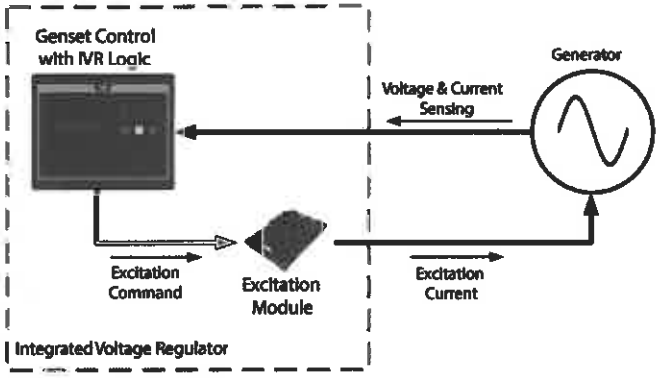

INTEGRATED VOLTAGE REGULATOR

The Integrated Voltage Regulator (IVR) is designed to provide robust, precise closed-loop control of the generator voltage, optimized transient performance and industry leading feature specification.

Caterpillar is leading the power generation marketplace with power solutions engineered to deliver unmatched flexibility, expandability, reliability and cost-effectiveness.

FEATURES

When used with an Excitation Module, EMCP 4.3/4.4 and IVR-compatible EMCP 4.1/4.2 controllers offer:

- Automatic Voltage Regulation (AVR)
- Programmable stability settings
- Soft start control with an adjustable time setting in AVR control mode
- **Dual Slope, Configurable Under Frequency (Volts/Hz)** regulation
- Three-phase or single-phase generator voltage (RMS) sensing/regulation in AVR mode
- Setpoint adjustment from the EMCP display or Cat® ET ServiceTool
- IVR Operating Status and Voltage Bias Overview screens to provide an enhanced level of user interface
- Integrated Voltage Regulator event monitoring

EMCP 4.3/4.4 and IVR-compatible EMCP 4.2 controllers also offer:

- Power Factor Regulation (PF)
- Reactive Droop compensation
- Line drop compensation

WORLDWIDE PRODUCT SUPPORT

- Worldwide parts availability through the Cat dealer network
- Over 1,800 dealer branch stores operating in 200 countries
- The best product support record in the industry
- Cat dealers provide extensive post sale support including maintenance and repair agreements

COMPLETE SYSTEM INTEGRATION

Fully designed and factory tested to work seamlessly with Cat generators using Self Excitation (SE), Internal Excitation (IE) or Permanent Magnet (PMG) excitation systems and EMCP controls.

INTEGRATED VOLTAGE REGULATOR

INTEGRATED VOLTAGE REGULATOR FEATURE SPECIFICATION

	EMCP 4.1	EMCP 4.2	EMCP 4.3	EMCP 4.4
SPECIFICATIONS				
No Load to Full Load Regulation	±0.5%	±0.25%	±0.25%	±0.25%
Configurable Volts / Hz Characteristic	•	•	•	•
Configurable Knee Frequency	•	•	•	•
Regulator ResponseTime	10 ms	10 ms	5 ms	5 ms
Single andThree Phase Sensing	•	•	•	•
Voltage Adjustment Range **(Configurable up to)**	± 30%	± 30%	± 30%	± 30%
CONTROL				
Dual Slope Configurable Volts / Hz Characteristic	•	•	•	•
Excitation Enable / Disable Selection	•	•	•	•
Line Loss (I^2R) Compensation	–	•	•	•
Reactive Droop Compensation	–	•	•	•
Power Factor Control Mode	–	•	•	•
PROTECTION / ALARMS				
Generator Overvoltage	•	•	•	•
Generator Undervoltage	•	•	•	•
Over Excitation	•	•	•	•
Loss of Sensing	•	•	•	•
Generator Reverse VARs	–	•	•	•
Event Log	•	•	•	•
METERING				
EMCP AC Metering	•	•	•	•
EMCP Power Metering	–	•	•	•
Excitation Command Percentage	•	•	•	•
Operating Mode Status Indication	•	•	•	•

INTEGRATED VOLTAGE REGULATOR

INTEGRATED VOLTAGE REGULATOR FEATURE SPECIFICATION (continued)

	EMCP 4.1	EMCP 4.2	EMCP 4.3	EMCP 4.4
VOLTAGE ADJUSTMENT				
EMCP 4 Display Voltage Bias	•	•	•	•
Digital Input (Raise / Lower) Voltage Bias[1]	•	•	•	•
Potentiometer Voltage Bias[1]	•	•	•	•
Analog Voltage Bias – Voltage Range[1]	0V to 5V	0V to 5V	-10V to +10V	-10V to +10V
Analog Voltage Bias – Current Range[1]	–	–	0mA to 20mA	0mA to 20mA
Analog Voltage Bias – PWM Range[1]	–	–	0% to 100%	0% to 100%
SCADA (Modbus) Voltage Bias	–	•	•	•

[1]Requires an available input on the EMCP 4.

INTEGRATED VOLTAGE REGULATOR

EXCITATION MODULE SPECIFICATION

The Integrated Voltage Regulator consists of an EMCP 4 interfacing with an Excitation Module. There are a range of Excitation Modules available to match Cat generator sets.

Figure 1:
EM10 Excitation Module

Figure 2:
EM15 Excitation Module

EXCITATION MODULE TECHNICAL SPECIFICATION

	EM10	EM15
Compatible Generator Excitation Types	Self Excitation (SE) Internal Excitation (IE) Permanent Magnet (PMG)	
Nominal Field Current Output	6 Amps	7 Amps
Maximum (forcing) Field Current Output	10 Amps	15 Amps
Maximum AC Voltage Input	180 Vrms	240 Vrms

For more information on the Excitation Module refer to the component spec sheet.

INTEGRATED VOLTAGE REGULATOR

EMCP 4 DISPLAY

EXAMPLE SCREENS – EMCP 4.1/4.2

Figure 3: IVR Overview Screen

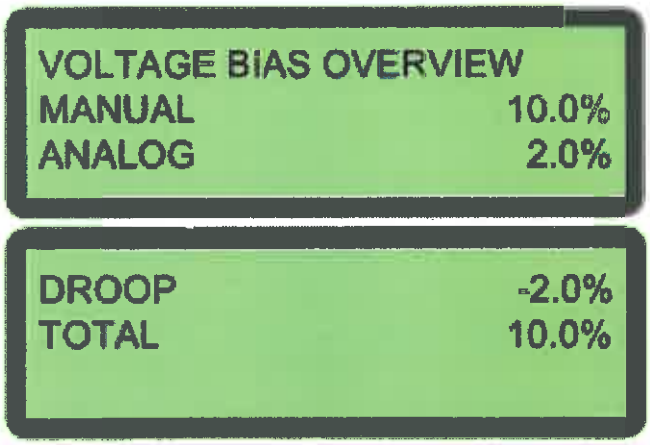

Figure 4: Voltage Bias Overview Screens

EXAMPLE SCREENS – EMCP 4.3/4.4

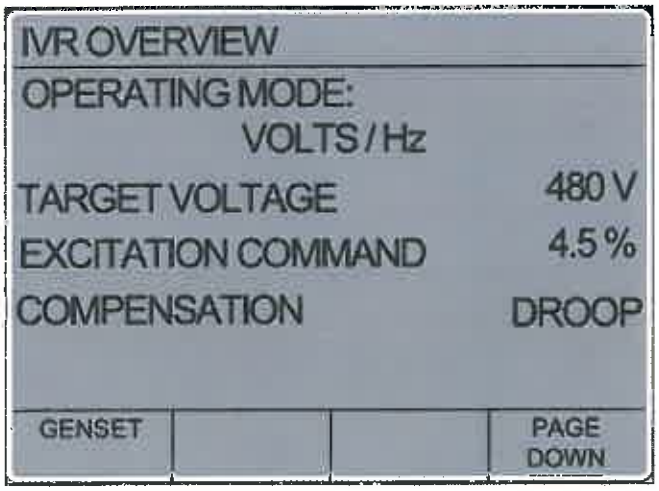

Figure 5: IVR Overview Screen

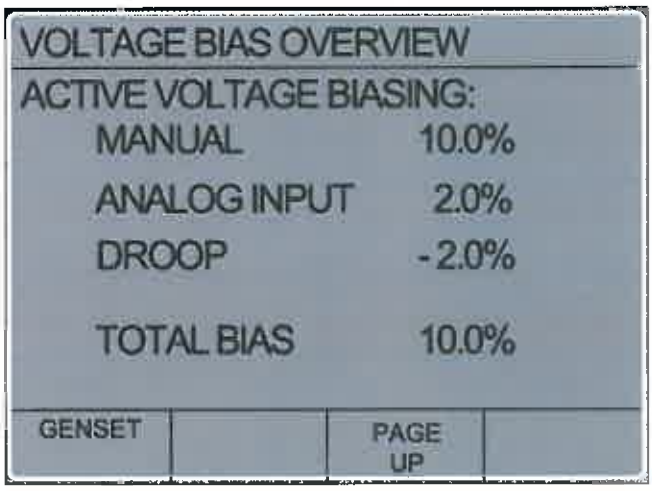

Figure 6: Voltage Bias Overview Screen

www.Cat-Electric Power.com
©2013 Caterpillar
All rights reserved

Materials and specifications are subject to change without notice.
The International System of Units (SI) is used in this publication.

CAT, CATERPILLAR, their respective logos, "Caterpillar Yellow", the "Power Edge" trade dress, as well as corporate and product identity used herein, are trademarks of Caterpillar and may not be used without permission.

LEHE0448-00 (08/13)

THOMPSON

Thompson Power

13

C9 ACERT™, C13 ACERT, C15 ACERT, C18 ACERT Circuit Breakers

Manually Operated Circuit Breakers

Current (A)	Frame	Number of Poles	Interrupting Ratings (kA rms)			Trip Units	(Lugs) Cable Size Range / Phase	Auxiliary Options
			240V	480V	600V			
250	T4N	3	65	25	18	Electronic LS/I (S or I) or LSI	(1) 6 AWG – 350 kcmil	1 Form C + 1 Bell Alarm 250VAC/VDC Shunt Trip 24VDC
400	T5N	3	65	25	18		(2) 3/0 – 250 kcmil	
600	T6N	3	65	35	20		(3) 2/0 – 400 kcmil	
800	T6N	3	65	35	20		(3) 2/0 – 400 kcmil	1 Form C + 1 Bell Alarm 400VAC / 250VDC Shunt Trip 24VDC
1200	T7S	3	65	50	25		(4) 4/0 – 500 kcmil	
1600	R	3	65	35	18	Electronic LSI	BUS BAR	Form C (1NO + 1NC) Shunt Trip 24VDC
2000	R	3	65	35	18		BUS BAR	
2500	R	3	65	35	18		BUS BAR	

Electrically Operated Circuit Breakers

Current (A)	Frame	Number of Poles	Interrupting Ratings (kA rms)			Trip Units	(Lugs) Cable Size Range / Phase	Auxiliary Options
			240V	480V	600V			
800	T7M-S	3	65	50	25	Electronic LSI	(4) 4/0 – 500 kcmil	2 Form C + 1 Bell Alarm 24VDC
1200	T7M-S	3	65	50	25		(4) 4/0 – 500 kcmil	2 Form C + 1 Bell Alarm 24VDC

Single Breaker Options (250 – 2500A)

Model	Current (A)	Operation
C9 ACERT™	250	Manually Operated
C9 ACERT	400	Manually Operated
C9 ACERT, C13 ACERT, C15 ACERT, C18 ACERT	600	Manually Operated
C9 ACERT, C13 ACERT, C15 ACERT, C18 ACERT	800	Manually Operated or Electrically Operated
C9 ACERT, C13 ACERT, C15 ACERT, C18 ACERT	1200	Manually Operated or Electrically Operated
C13 ACERT, C15 ACERT, C18 ACERT	1600	Manually Operated
C15 ACERT, C18 ACERT	2000	Manually Operated
C18 ACERT	2500	Manually Operated

Multiple Breaker Options

	Main Breaker Box		Auxiliary Box
	1st Breaker (Amps)	2nd Breaker (Amps)	Breaker (Amps)
Model	Manually Operated	Manually Operated	Manually Operated
C9 ACERT, C13 ACERT, C15 ACERT, C18 ACERT	250 ✓	✓ 250, 400, 600, 800, or 1200	3rd Breaker: 250 or 400 (Not available if 1st & 2nd Breaker = 1200A)
C9 ACERT, C13 ACERT, C15 ACERT, C18 ACERT	400		
C9 ACERT, C13 ACERT, C15 ACERT, C18 ACERT	600		
C9 ACERT, C13 ACERT, C15 ACERT, C18 ACERT	800		
C9 ACERT, C13 ACERT, C15 ACERT, C18 ACERT	1200		
C13 ACERT, C15 ACERT, C18 ACERT	1600	Not Available	2nd Breaker: 250 or 400
C15 ACERT, C18 ACERT	2000		
C18 ACERT	2500		

www.Cat-ElectricPower.com
©2016 Caterpillar
All rights reserved.

Materials and specifications are subject to change without notice. CAT, CATERPILLAR, their respective logos, "Caterpillar Yellow", the "Power Edge" trade dress as well as corporate and product identity used herein, are trademarks of Caterpillar and may not be used without permission.

THOMPSON

Thompson Power

14

Circuit Breakers

Picture shown may not represent actual package

Molded Case Circuit Breakers: 30A – 1200A

40kW – 600kW Gensets

Features

- 100% UL Listing
- Thermal Magnetic Trip Units (Frames T1N and T3N)
- Electronic Trip Units (Frames T4N, T5N, T6N & T7S/T7M-S)
- Double insulation
- Clear indication of breaker status
- Can be used in normal operation in an ambient of −25° C and +70° C
- Auxiliary contacts available
- Insulating case constructed from fiberglass reinforced synthetic resin
- Anti-corrosion treatment on all metal parts
- Optional Dual Circuit Breakers

Conformity with International Standards

The T1N through T6N and T7S/T7M-S Frame Circuit Breakers have been designed to comply with these major standards:

- UL 489
- CSA22.2 No.5
- IEC 60947-2

Circuit Breakers

Manually Operated Circuit Breakers

Current (A)	Frame	Number of Poles	Interrupting Ratings (kA rms)			Trip Units
			240V	480V	600V	
30	T1N	3	50	22	10	Thermal Magnetic
40	T1N	3	50	22	10	
50	T1N	3	50	22	10	
60	T1N	3	50	22	10	
70	T1N	3	50	22	10	
80	T1N	3	50	22	10	
90	T1N	3	50	22	10	
100	T1N	3	50	22	10	
125	T3N	3	50	25	10	
150	T3N	3	50	25	10	
175	T3N	3	50	25	10	
200	T3N	3	50	25	10	
225	T3N	3	50	25	10	
250	T4N	3	65	25	18	Electronic LS/I (S or I)
400	T5N	3	65	25	18	
600	T6N	3	65	35	20	
800	T6N	3	65	35	20	
1200	T7S	3	65	50	25	

Electrically Operated Circuit Breakers

Current (A)	Frame	Number of Poles	Interrupting Ratings (kA rms)			Trip Units
			240V	480V	600V	
800	T6N	3	65	35	20	Electronic LSI
1200	T7M-S	3	65	50	25	

Electronic LS/I Trip Units offer LS or LI Protection

L-I Mode

- Long Time / Overload Protection, "L" has an adjustable trip threshold and adjustable time delay
- Instantaneous Short Circuit Protection, "I" has an adjustable short circuit trip threshold and once exceeded will cause the circuit breaker to trip instantaneously

L-S Mode

- Long Time / Overload Protection, "L" has an adjustable trip threshold and adjustable time delay
- Short Circuit Protection, "S" has an adjustable short circuit trip threshold and adjustable time delay if necessary for coordinating with downstream loads
- Instantaneous Short Circuit Protection, "I" is still included, but the threshold level is not adjustable and exists at a predetermined level

T1 100 - TMF

In = 15 ÷ 70 A

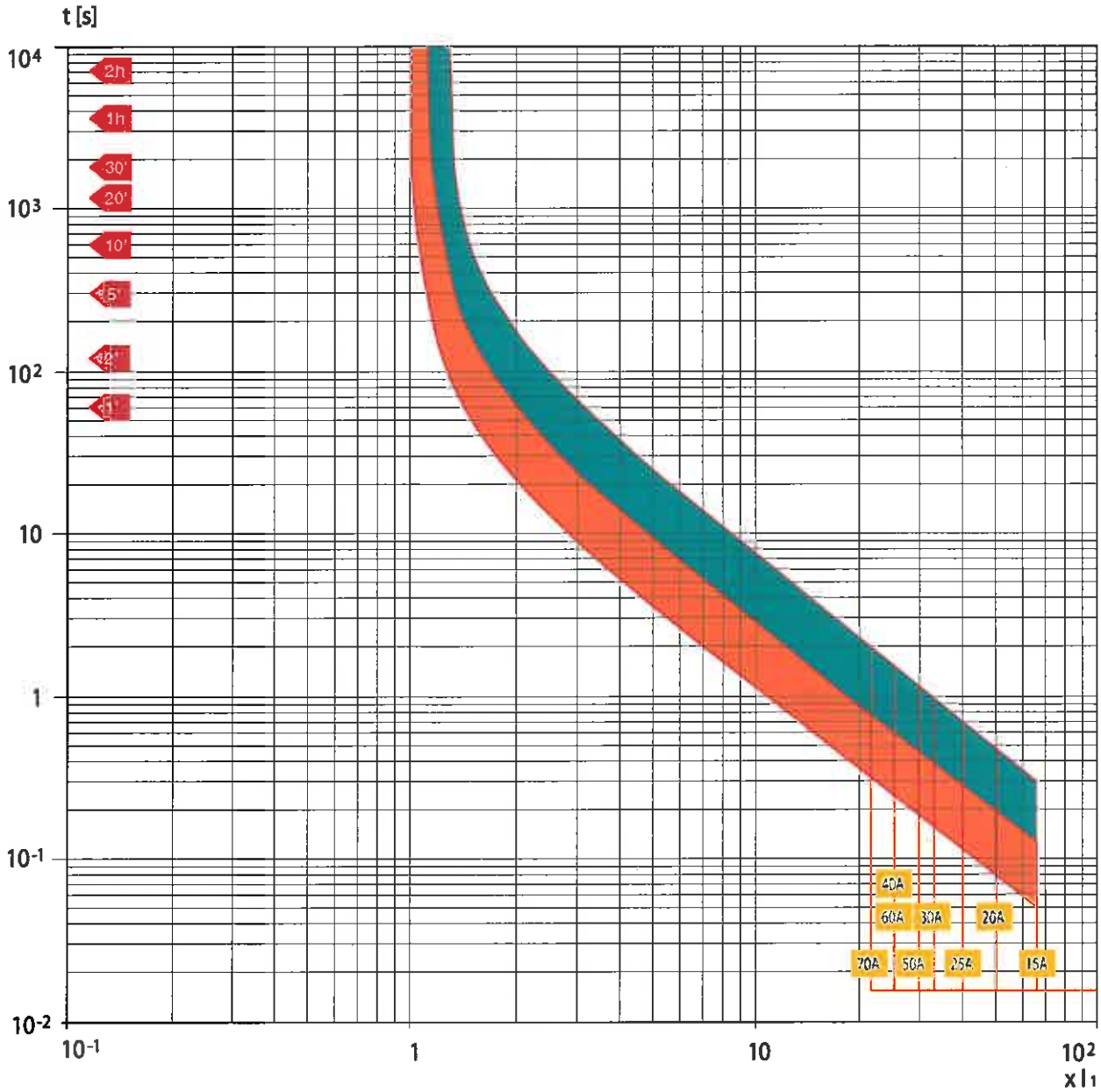

T1 100 - TMF

In = 80 ÷ 100 A

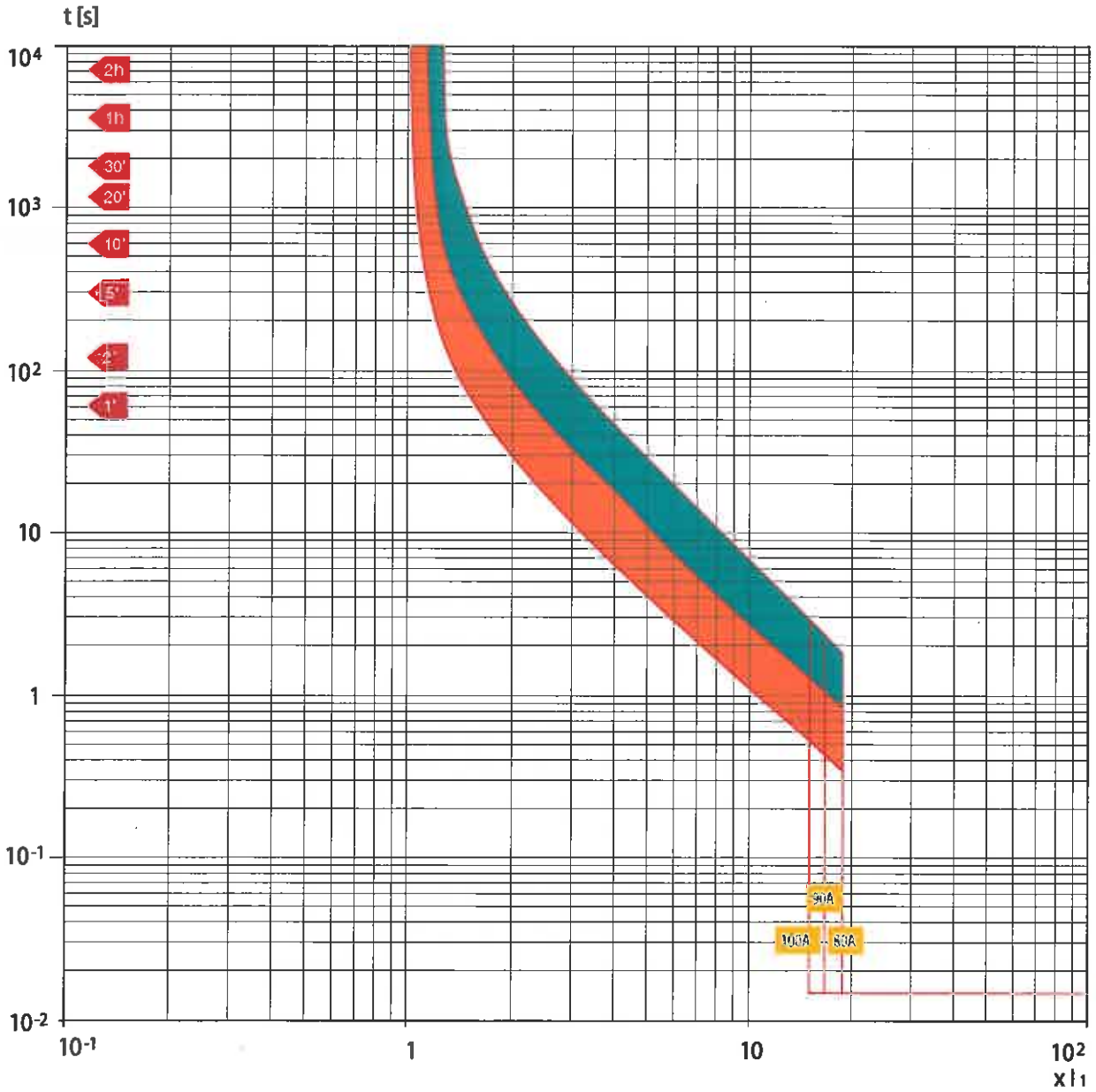

T3 225 – TMF

In = 125 ÷ 225 A

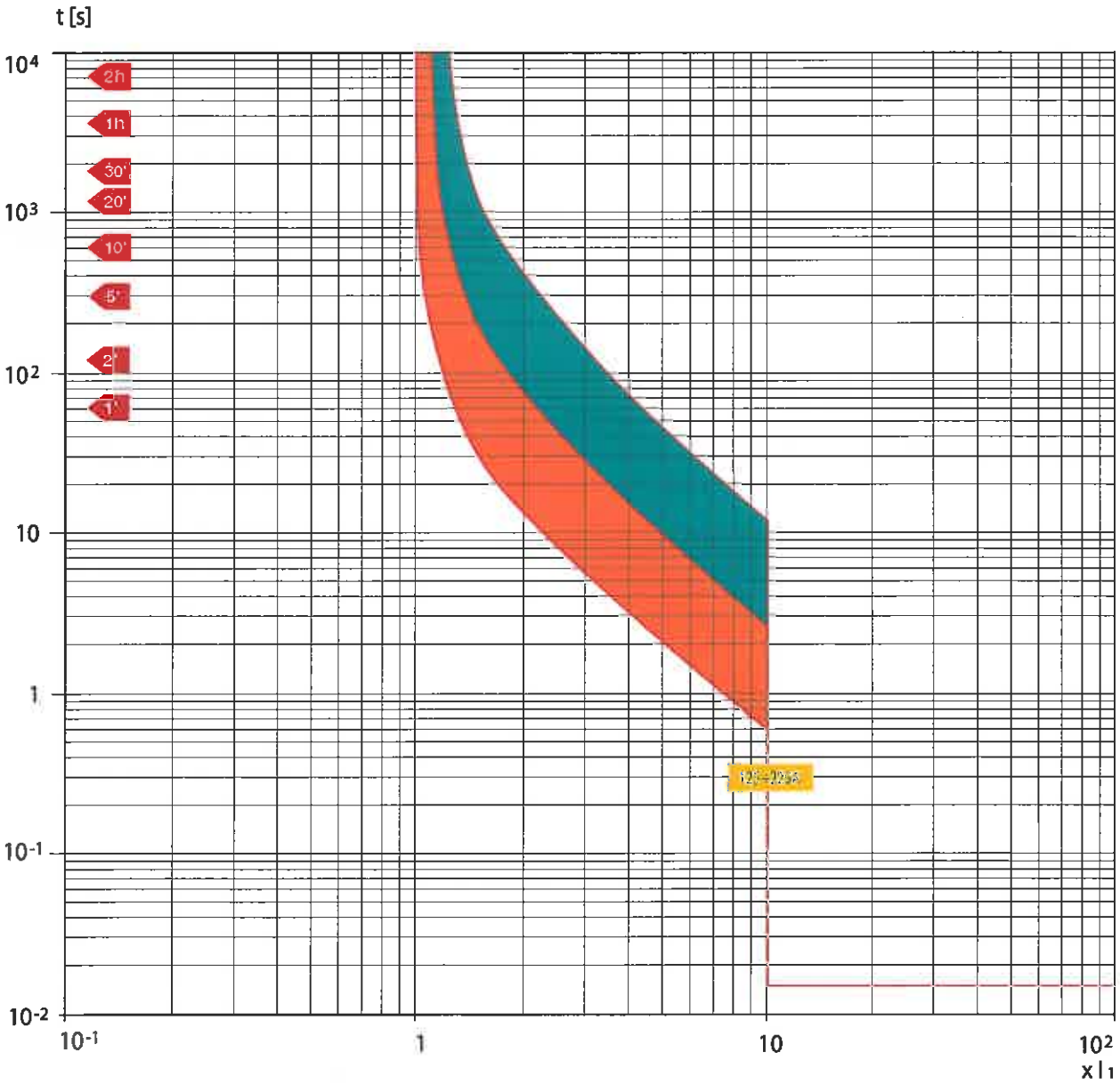

T4 250 / T5 400 - PR221DS

L-I Functions

Note: For T5 In = 600 A ☒ I_3max = 9.5 x In

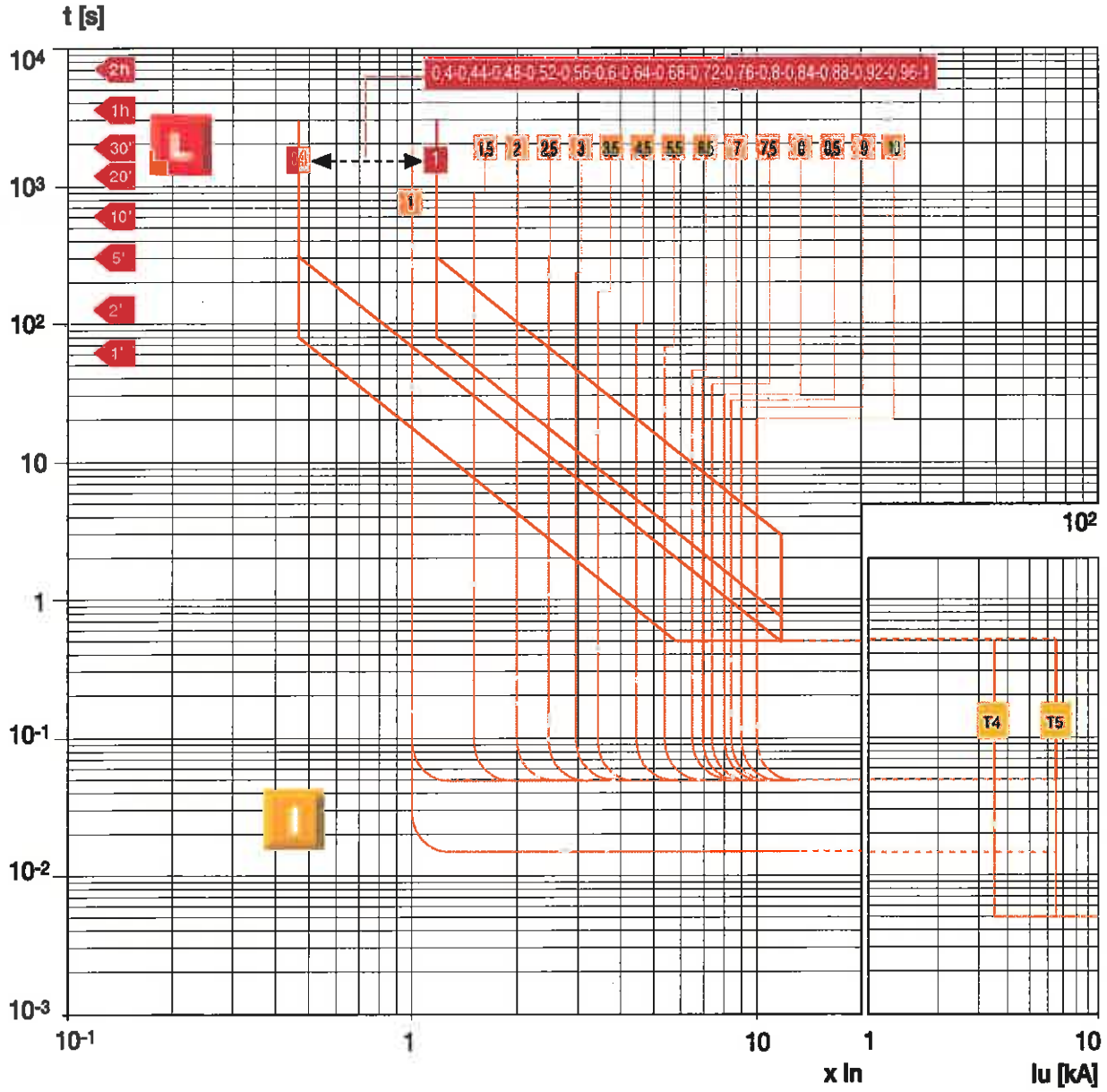

T4 250 / T5 400 - PR221DS

L-S Functions

Note: For T5 In = 600 A ☒ I_2max = 9.5 x In

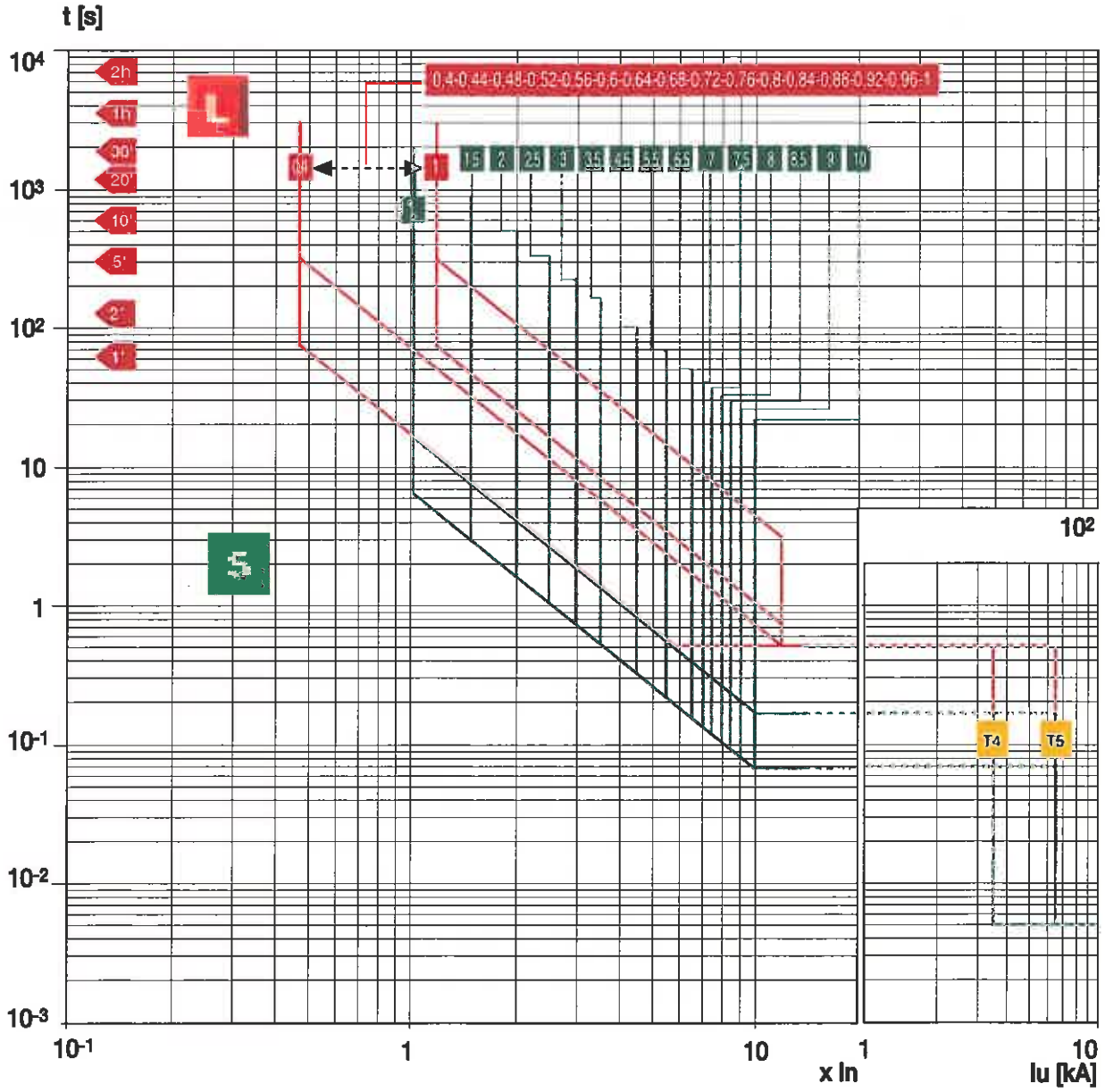

T6 600 / 800 – PR221DS

L-I Functions

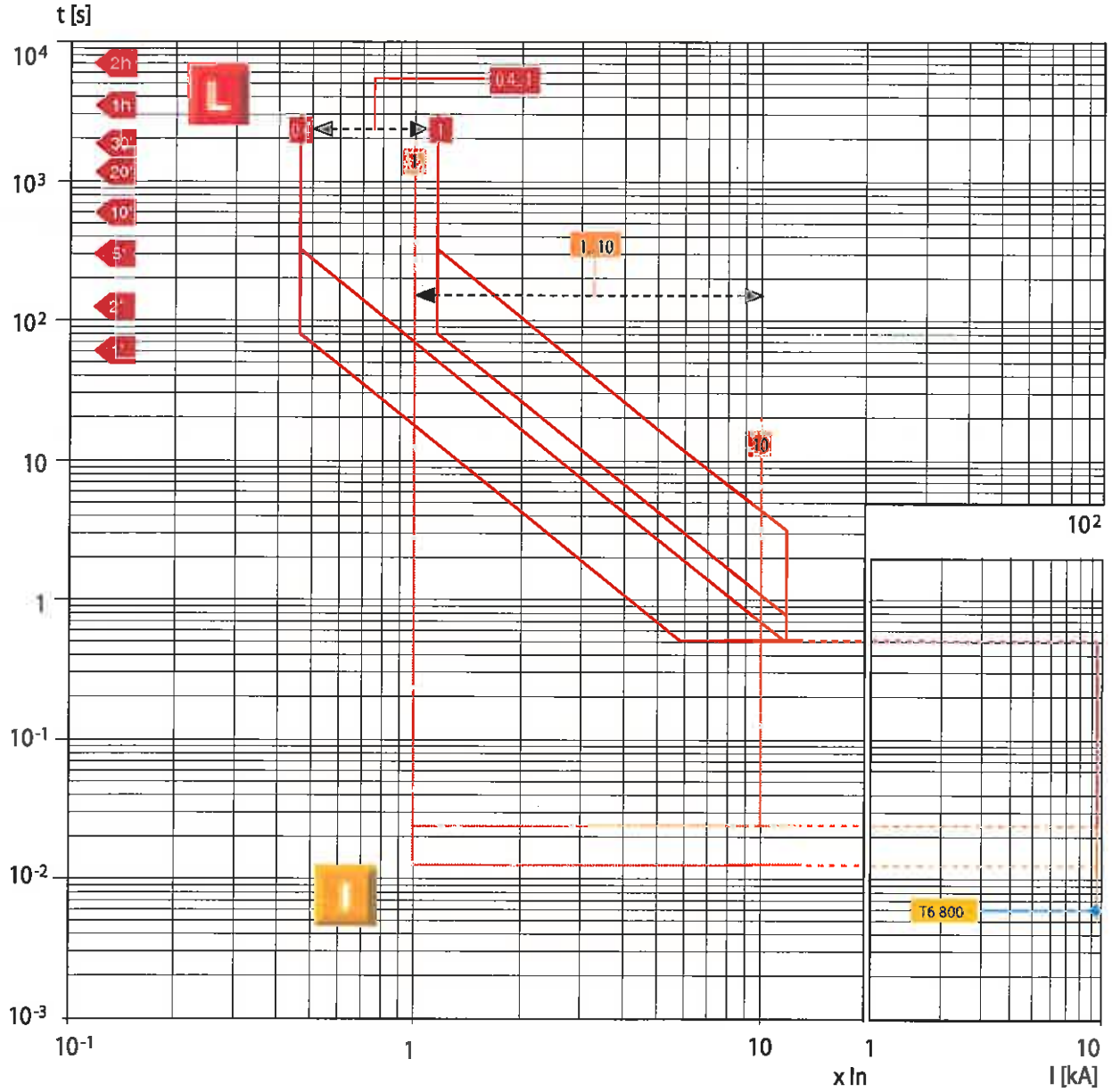

T6 600 / 800 – PR221DS

L-S Functions

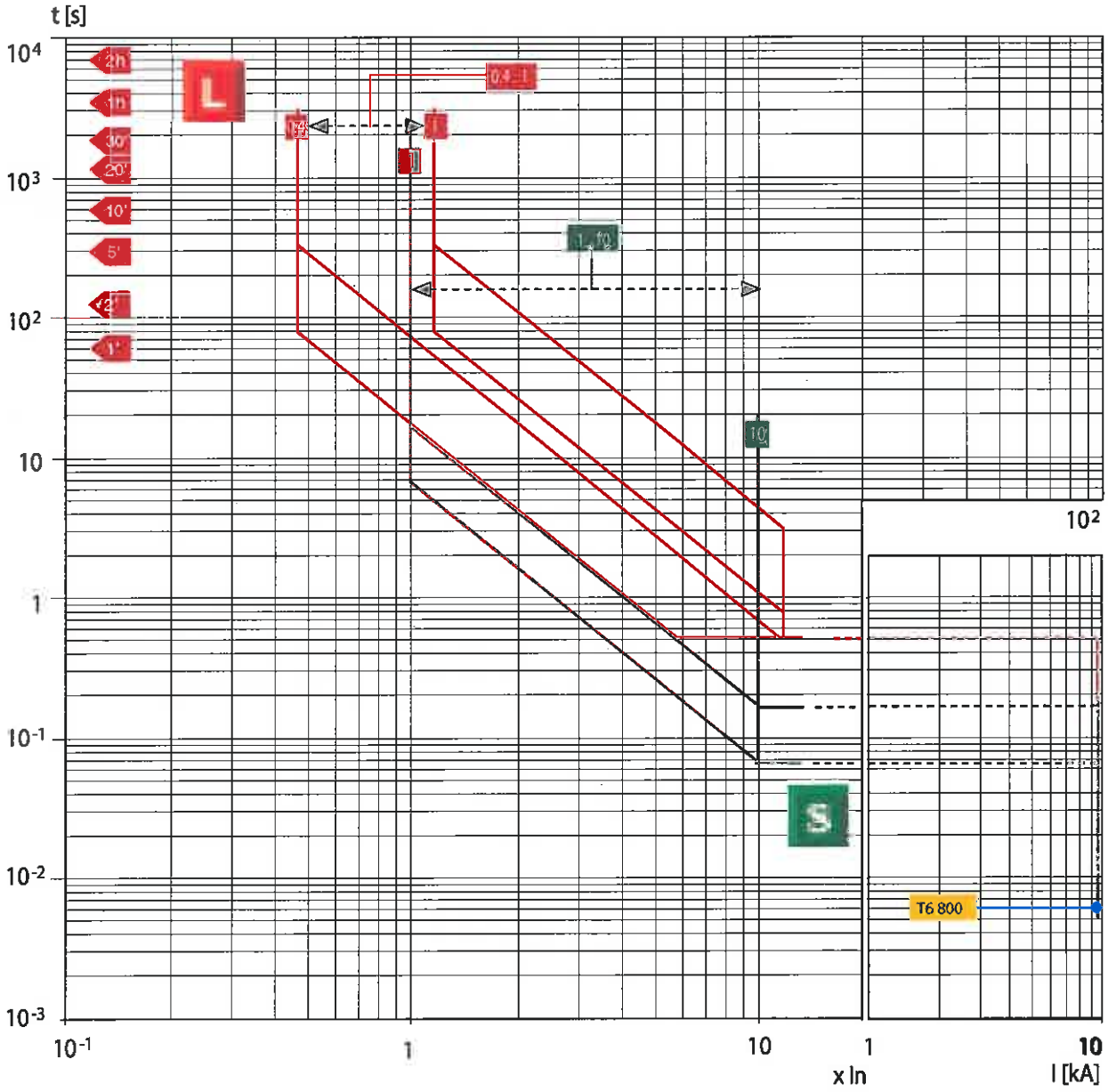

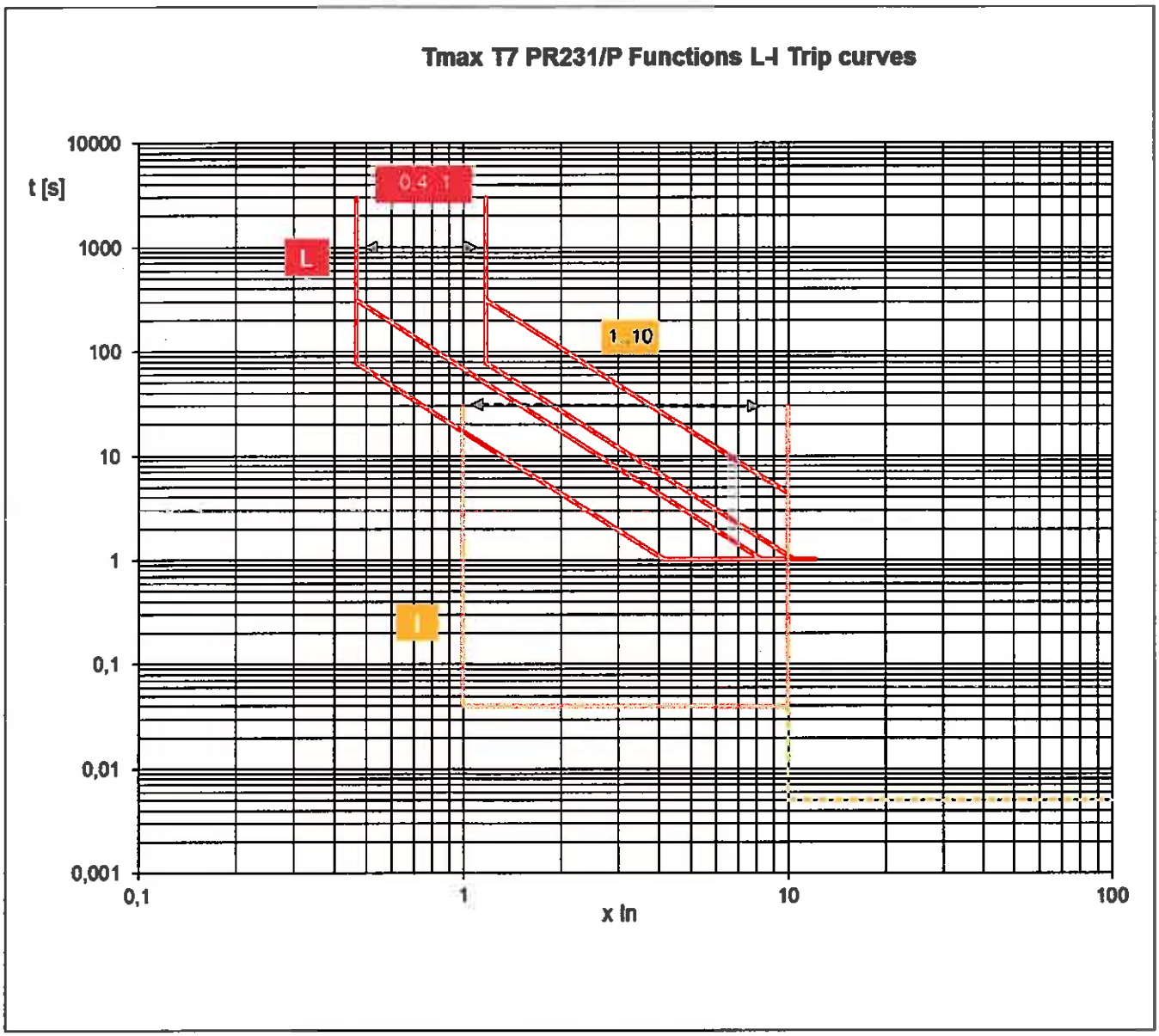
Tmax T7 PR231/P Functions L-I Trip curves
t [s]
10000
1000
100
10
1
0,1
0,01
0,001
0,1
1
10
100
x In
0.4 1
L
1 10
I

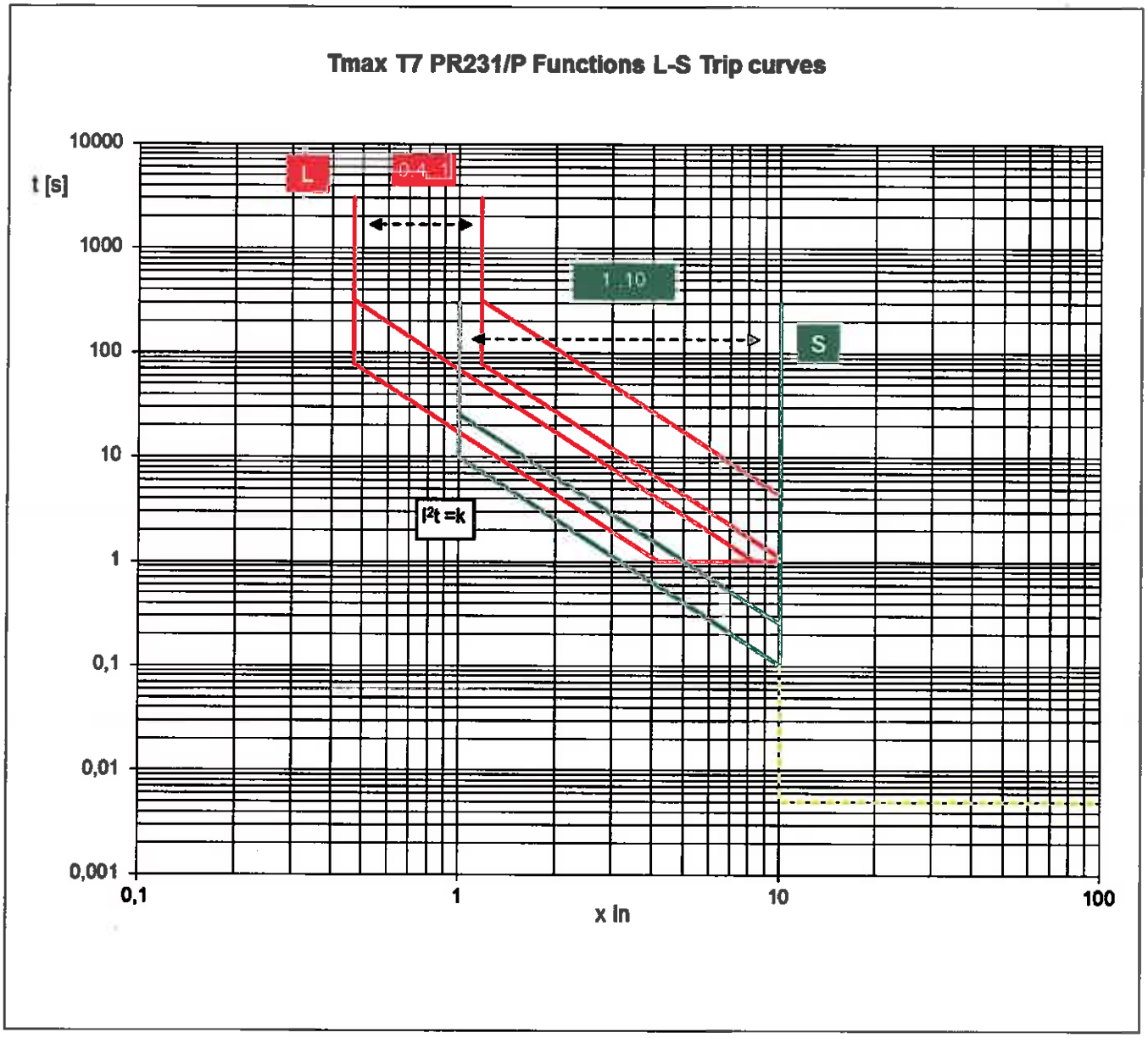

Information contained in this publication may be considered confidential.
Discretion is recommended when distributing.
Materials and specifications are subject to change without notice.
CAT, CATERPILLAR, their respective logos, "Caterpillar Yellow," the "Power Edge" trade dress, as well as corporate and product identity used herein, are trademarks of Caterpillar and may not be used without permission.

© 2013 Caterpillar
All Rights Reserved.

LEHE0470-00 (10/13)

METRIC 455-7841

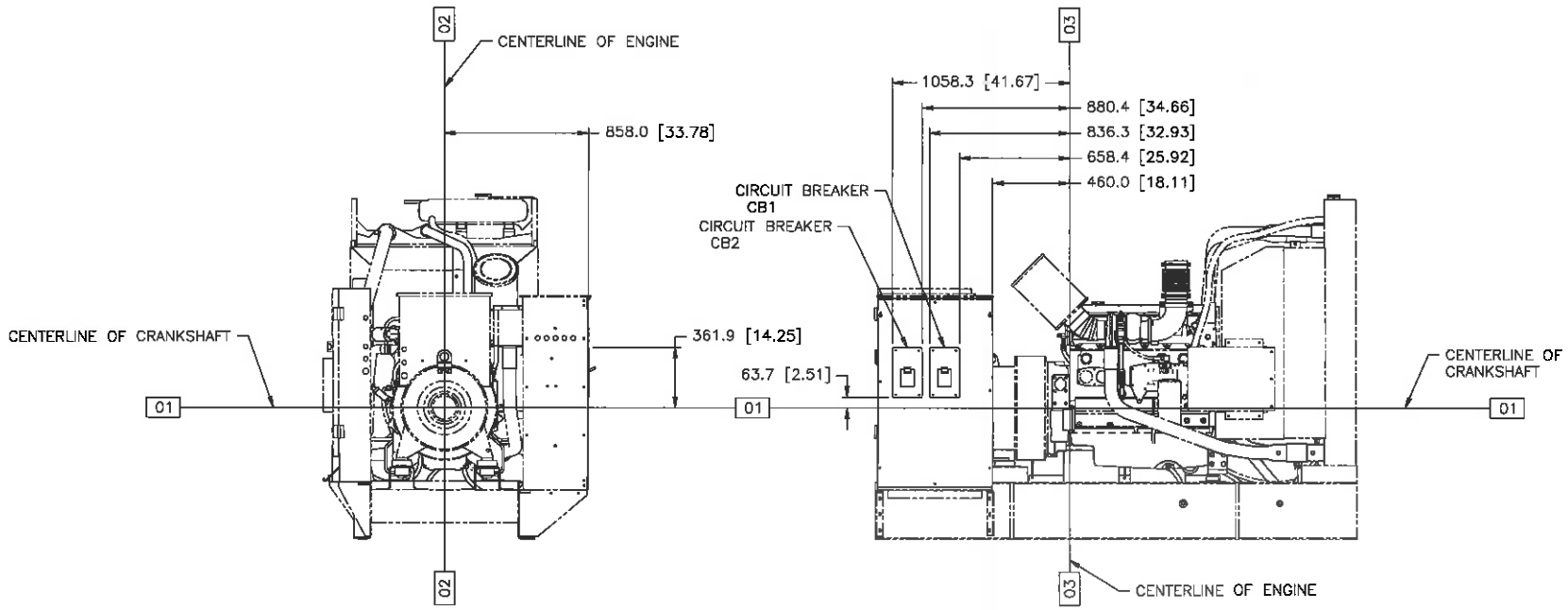

FRONT VIEW

RIGHT SIDE VIEW

CB1 (MULTIPLE MANUAL)		
MODEL	PRICING AR	AMPS
C9	LS1357 CHG 00	250
	LS1343 CHG 00	400
	LS1344 CHG 00	600
	LS1345 CHG 00	800
	LS1346 CHG 00	1200

CB2 (MULTIPLE MANUAL)		
MODEL	PRICING AR	AMPS
C9	LS1358 CHG 00	250
	LS1359 CHG 00	
	LS1347 CHG 00	400
	LS1348 CHG 00	
	LS1349 CHG 00	600
	LS1350 CHG 00	800
	LS1351 CHG 00	1200

1E2733 DRAWING-AUTOCAD
FD011 INTPR & TOL
SPEC NO. NAME
DRN I.V.U. JORDAN
CHK E.A. SOTO
APPR N.P. MOUNTJOY
SCALE 1 = 10
SHEET 2 OF 1
DD 05JAN14
CATERPILLAR INC.
INSTALLATION-ATTACHMENT
C9 CIRCUIT BREAKERS
455-7841
E

THOMPSON

CAT

Thompson Power

15

C9
JACKET WATER HEATER

This is a factory-installed tank-styled jacket water heater for increased cold-starting capability.
The system includes a thermostatically controlled heater, hoses and heater disconnect relay.
The compact design is ideal for location that require minimal mounting space.

FEATURES

- Complete with durable silicone hoses
- Vibration and shock tested to extreme limits to guarantee durability
- Automatically disconnected when engine is running via the generator space heater relay
- Supplied with UL recognized components
- Thermostat OFF TEMPERATURE is factory pre-set to 49°C (120°F)
- Molded from Polyphenylene Sulfide (PPS)
- Rust-free, resists corrosion, exceptional tensile strength
- Compatible with all chemicals
- Thermostatically controlled
- All parts are field replaceable
- Incoloy element for longer service life
- Compact design requires minimal mounting space

SPECIFICATIONS

Unit Specifications			
Design Voltage			
	208	220	240
Rating	1.5 kW	1.68 kW	2 kW
Frequency	50/60	50/60	50/60
Phase	1	1	1
Amps	7.22	7.64	8.3
Thermostat Range	37.8° – 48.9°C (100° – 120°F)		
Feature Code	JWH0027		

HEATER OPERATION

The heater uses UL compliant components to (UL1030) and has CSA certification, which is to both CSA and UL standards.

A thermostat controller is included to regulate the output temperature to within safe limits. When the generator set is not running, the heater is automatically connected to the AC supply through a power relay mounted in the control panel. Upon receiving a start signal, the AC supply is automatically disconnected by the power relay and automatically reconnected when the start signal is removed and the engine has stopped.

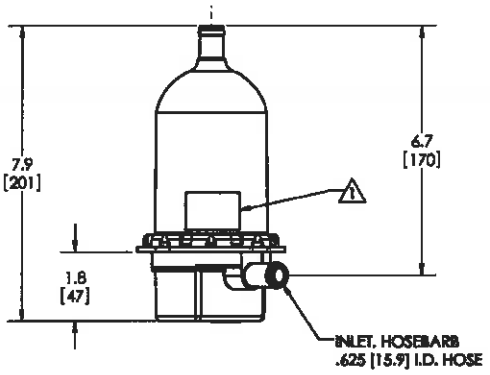

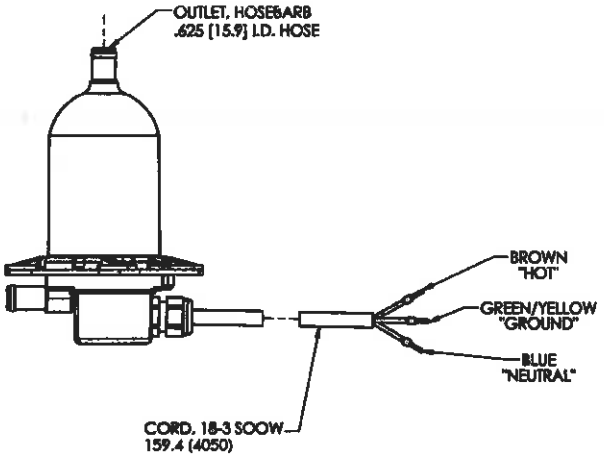

www.Cat-ElectricPower.com

© 2014 Caterpillar
All rights reserved.

Materials and specifications are subject to change without notice.
The International System of Units (SI) is used in this publication.

CAT, CATERPILLAR, their respective logos, "Caterpillar Yellow," the "Power Edge" trade dress, as well as corporate and product identity used herein, are trademarks of Caterpillar and may not be used without permission.

THOMPSON

Thompson Power

16

BATTERY CHARGER

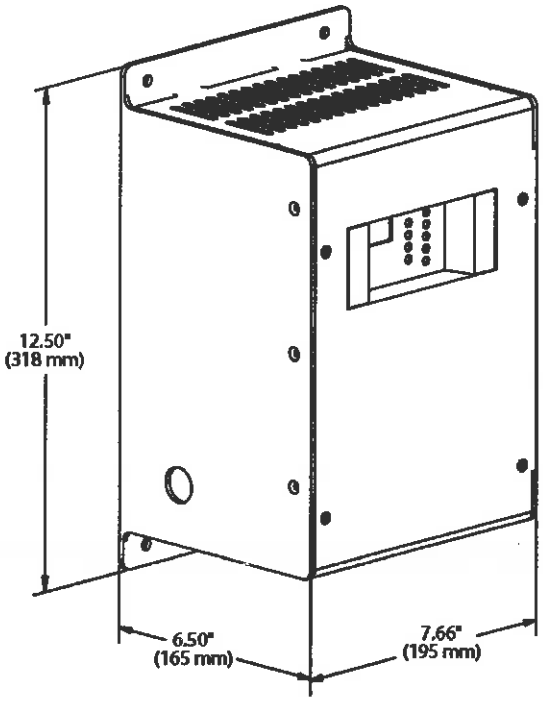

Image Shown may not Reflect Actual Package

UL 10 AMP BATTERY CHARGER

This battery charger offers accurate, automatic charging of lead-acid and nickel cadmium batteries. The output voltage automatically adjusts to changing input, load, battery and ambient conditions. This prevents battery over-charging and consequent loss of battery electrolyte.

Standard features include AC line compensation, precision voltage regulation, current limiting, automatic 2-rate charging, voltmeter and ammeter, temperature compensation and UL Listing.

The user interface is easy to understand with digital metering, NFPA 110 alarms and a battery fault alarm.

SPECIFICATION

Input Supply	110-120 V
	208-240 V
AC and DC Fuses	2 input and 2 output)
Output voltage	24V
Frequency	50/60 Hz
Operating temperature	-20°C (-4°F)
	to +60°C (140°F)

Housing constructed of rustproof anodized aluminum.

STANDARDS

- C-UL listed to UL 1236
- NFPA 70, NFPA 110
- CSA 22.2 No 107 certified
- UL 1564
- CE DOC to EN 60335
- IBC Seismic Certification

FEATURES

- Electronically current limited at 105% of rated output
- Alarm system
- Digital Display
- Lightning and voltage transient protection
- Protection of connected equipment against load dump protection
- Constant voltage, current limited, 4-rate automatic equalization
- IP 20 housing
- AC isolated from DC
- Temperature Compensation
  - On board temperature sensor with remote port
- Auto AC line compensation
- Output regulated by sensed battery voltage

BATTERY CHARGER

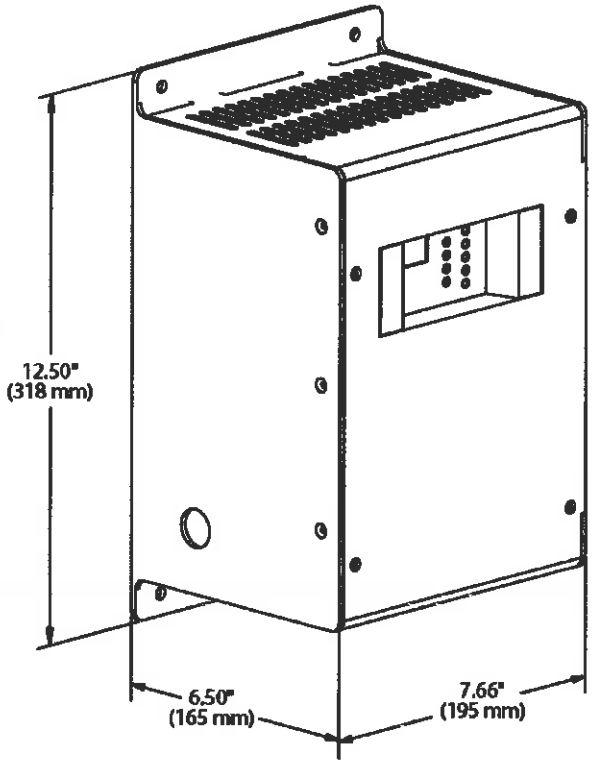

Output		Input	
Amps	Volts	Hz	Volts
10	24	50/60	110-120 208-240
Width	Depth	Height	Weight
195 mm (7.66")	165 mm (6.50")	318 mm (12.50")	10.4 kg (23 lb)
Feature codes			
BTC1024	BTC1028	BTC1035	
BTC1025	BTC1032		

NFPA 110 alarm package as follows:

- AC on — Green led (indication)
- AC fail — Red led and form C contact (2A)
- Float mode — LED
- Fast charge — LED
- Temp comp active — LED
- Low battery volts — Red led and Form C contact
- High Battery Volts — Red led and Form C contact
- Charger fail — Red led and Form C contact
- Battery fault — Red led and Form C contact
  - Battery disconnected
  - Battery polarity reversed
  - Mismatched charger battery voltage
  - Open or high resistance charger to battery connection
  - Open battery cell or excessive internal resistance

Information contained in this publication may be considered confidential. Discretion is recommended when distributing.
Materials and specifications are subject to change without notice.
CAT, CATERPILLAR, their respective logos, "Caterpillar Yellow," the "Power Edge" trade dress as well as corporate and product identity used herein, are trademarks of Caterpillar and may not be used without permission.

www.Cat-ElectricPower.com

LEHE0141-02 (03-12)

©2012 Caterpillar
All Rights Reserved.
Printed in U.S.A.

THOMPSON

Thompson Power

17

PREMIUM HIGH OUTPUT BATTERIES

Cat Premium High Output Batteries are designed to survive the toughest abuse and built to perform in the harshest environments. They offer reliable starting power and long life in all climates. Their high cold cranking amps and reserve capacities have earned them the maximum performance rating in the battery industry.

FEATURES

- Rugged plates, connectors and element anchoring resist the industry's most abusive vibration tests
- Through-partition connectors shorten the electrical path and maximize starting power
- Extra-heavy grids increase life and power in extreme cold and heat
- Extra corrosion resistance and built-in overcharge protection reduce maintenance
- Durable plates with optimum acid/paste combination provide excellent charge acceptance after deep discharge
- Microporous polyethylene separator protects against "shorts" and vibration damage
- 40-degree tilt capacity eliminates damaging spills
- Impact-resistant cases provide extra strength, especially in sub-zero temperatures
- Flame arrestor safety vents reduce the possibility of explosion from external sparks

PREMIUM HIGH OUTPUT PERFORMANCE

BCI Group Size	Part No.	Volts	Cold Cranking Amps[1]	Reserve Capacity Minutes[2]	Amp Hr. Capacity @ 20 Hrs.	Construction	Add Water Maintenance Check/Hrs.	Max. Overall Dimensions			Normal Weight		Nominal Acid to Fill liter (qt)
								Length mm (in)	Width mm (in)	Height mm (in)	Wet kg (lb)	Dry kg (lb)	
4D	9X-9730	12	1300	400	190	LAC/P	1000	528 (20,8)	218 (8,6)	250 (9,8)	54 (119)	37 (81)	14 (14,8)
4D	9X-9720	12	1000	275	140	LAC/P	1000	528 (20,8)	218 (8,6)	250 (9,8)	46 (101)	27 (59)	15 (15,9)

[1] For 30 seconds at –18° C (0° F)
[2] Minimum of 25 amp output at 27° C (80° F)

LA = Low Antimony design
LAC = Low Antimony Calcium design
P = Polypropylene case
R = Hard Rubber case

Batteries have taper post design and are shipped dry.

PGS MODELS

Diesel	PGS 300-900F	PGS 900S-1500 PGS 425SL-600SL	PGS 1750-2250
Gas	PGS 150-450		
Standard Batteries	9X-9720 (qty 2)	9X-9730 (qty 2)	9X-9720 (qty 4)
Optional "Oversize Batteries"	9X-9730 (qty 2)	9X-9730 (qty 4)	9X-9730 (qty 4)

CATERPILLAR

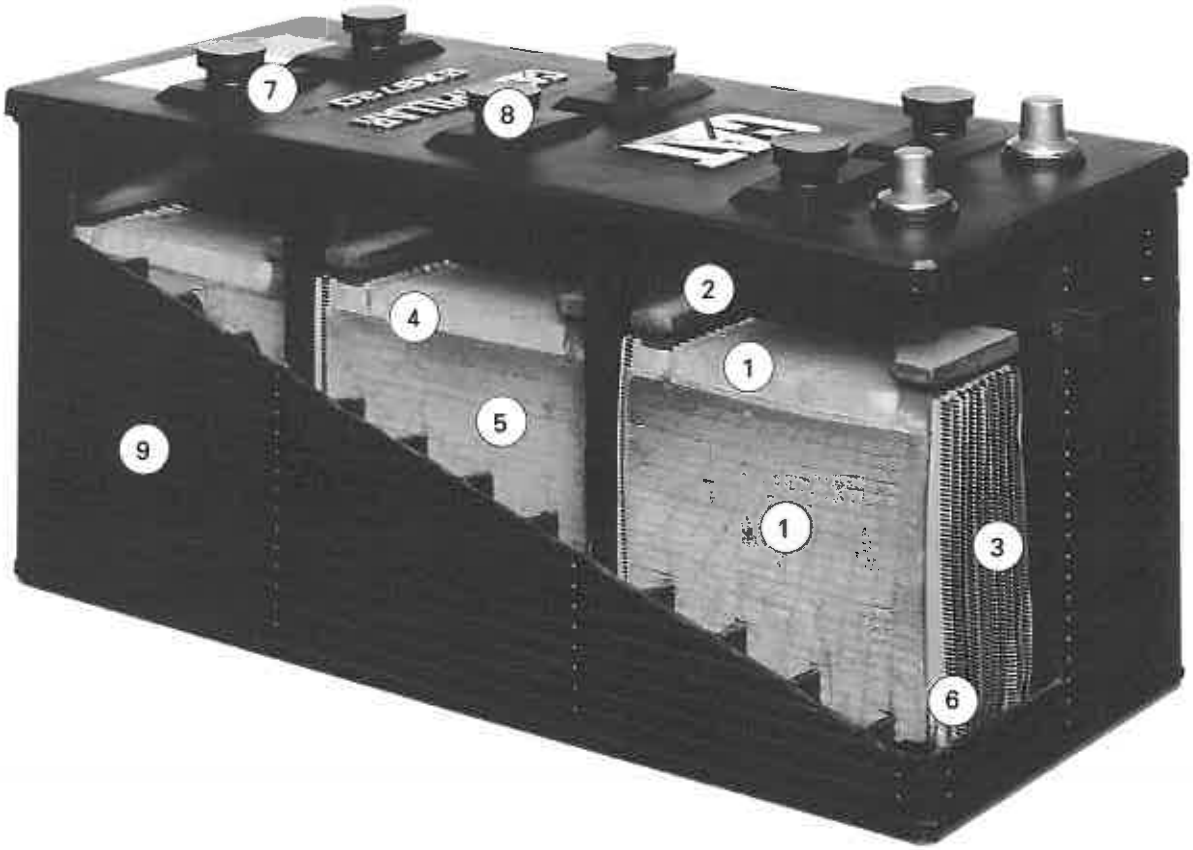

1. Rugged plates, connectors, and element anchoring resist vibration.
2. Through-partition connectors shorten the electrical path and maximize starting power.
3. Extra-heavy grids increase life and power in extreme cold and heat.
4. Extra corrosion resistance and built-in overcharge protection reduce maintenance.
5. Durable plates with optimum acid/paste combination provide excellent charge acceptance after deep discharge.
6. Microporous polyethylene separators protect against "shorts" and vibration damage.
7. 40-degree tilt capacity eliminates damaging spills.
8. Impact-resistant cases provide extra strength, especially in sub-zero temperatures.
9. Flame arrestor safety vents reduce the possibility of explosion from external sparks.

CATERPILLAR FACILITIES ISO 9001 CERTIFIED

www.CAT-ElectricPower.com

© 2001 Caterpillar
All rights reserved.
Printed in U.S.A.

U.S. sourced

LEHX7069-03 (6-01)

Materials and specifications are subject to change without notice.
The International System of Units (SI) is used in this publication.

THOMPSON

Thompson Power

18

WIRE PULL LIST

D.C. CONNECTIONS

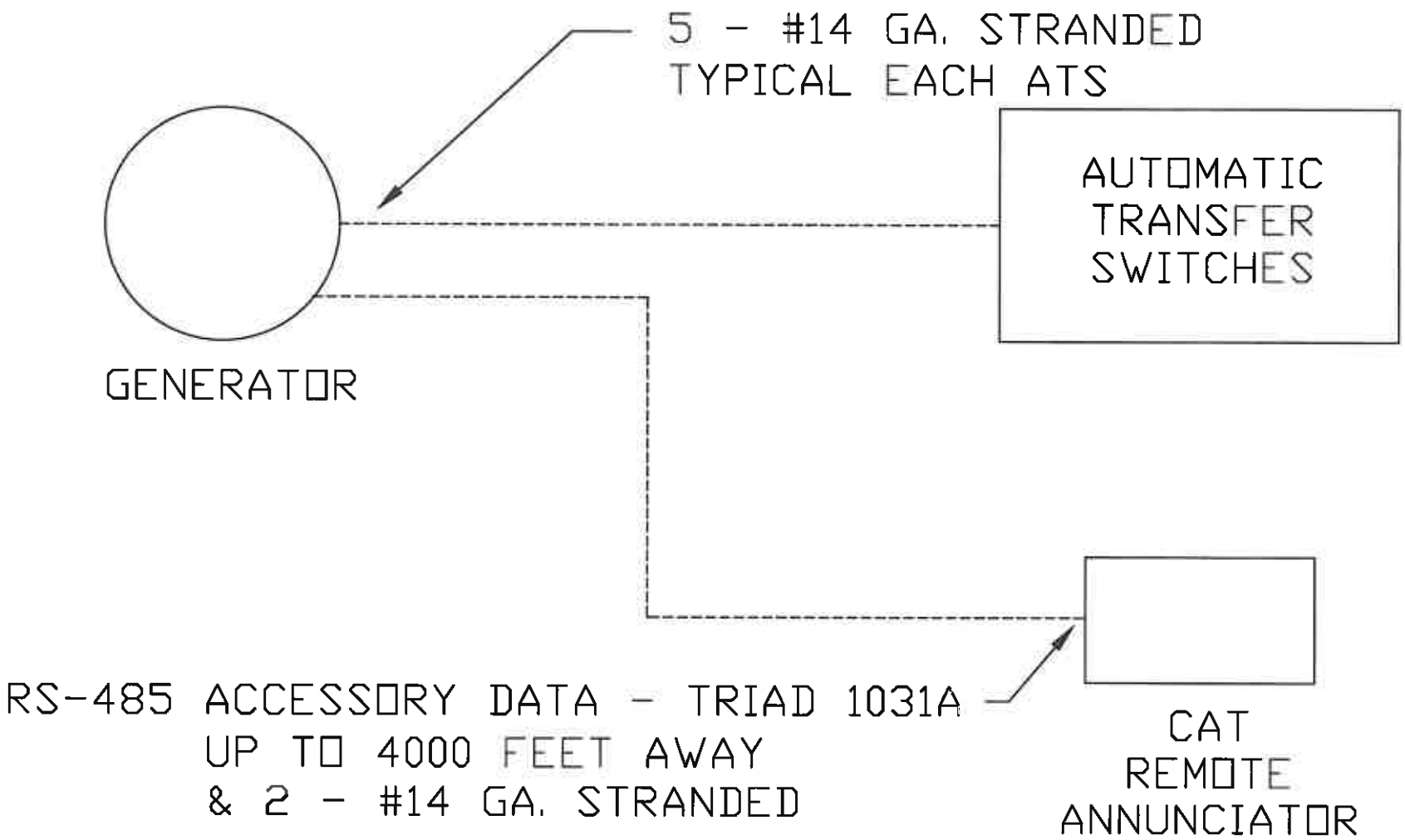

WIRE PULL LIST

A.C. OUTPUT CONNECTIONS

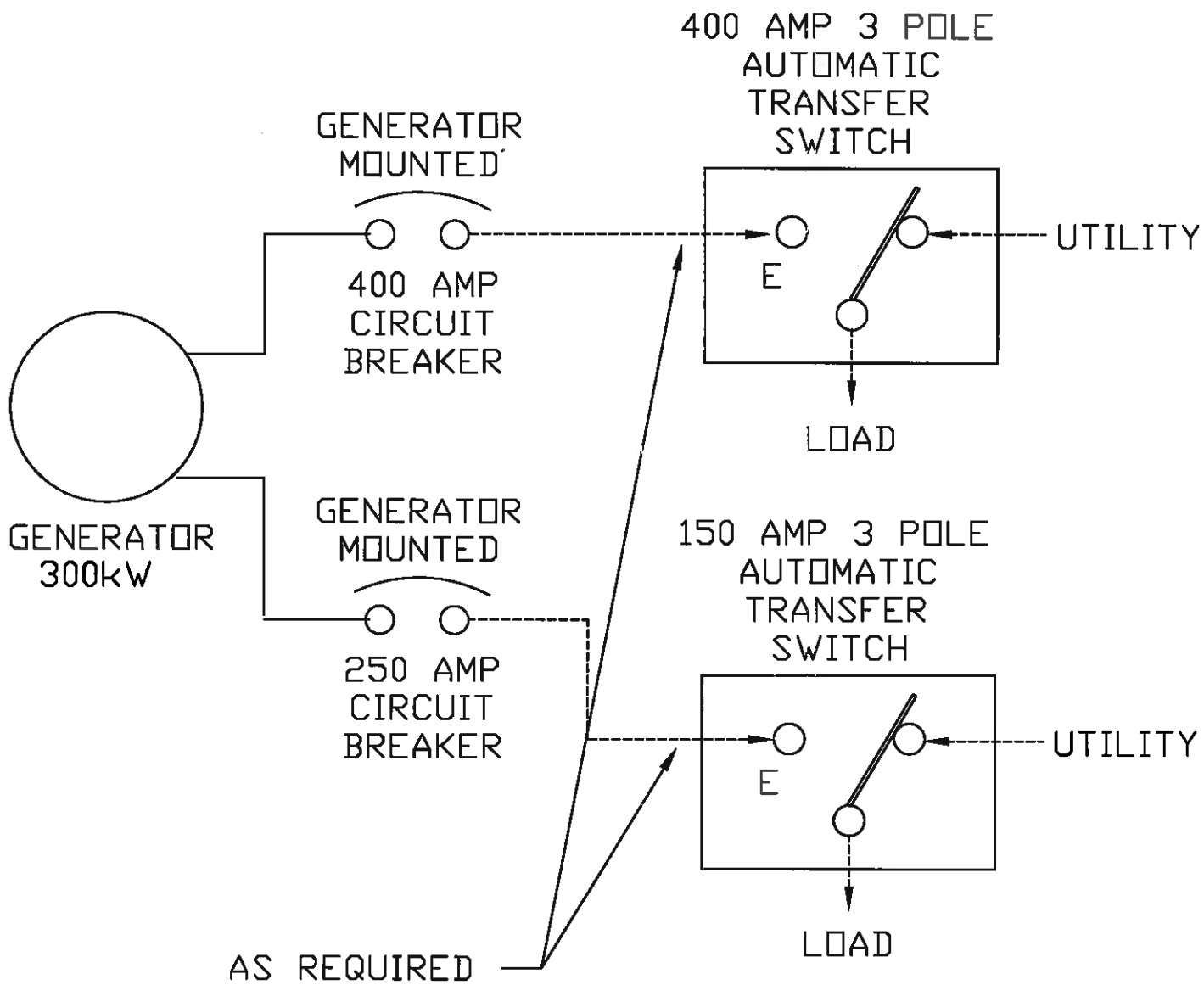

WIRE PULL LIST

A.C. INPUT CONNECTIONS

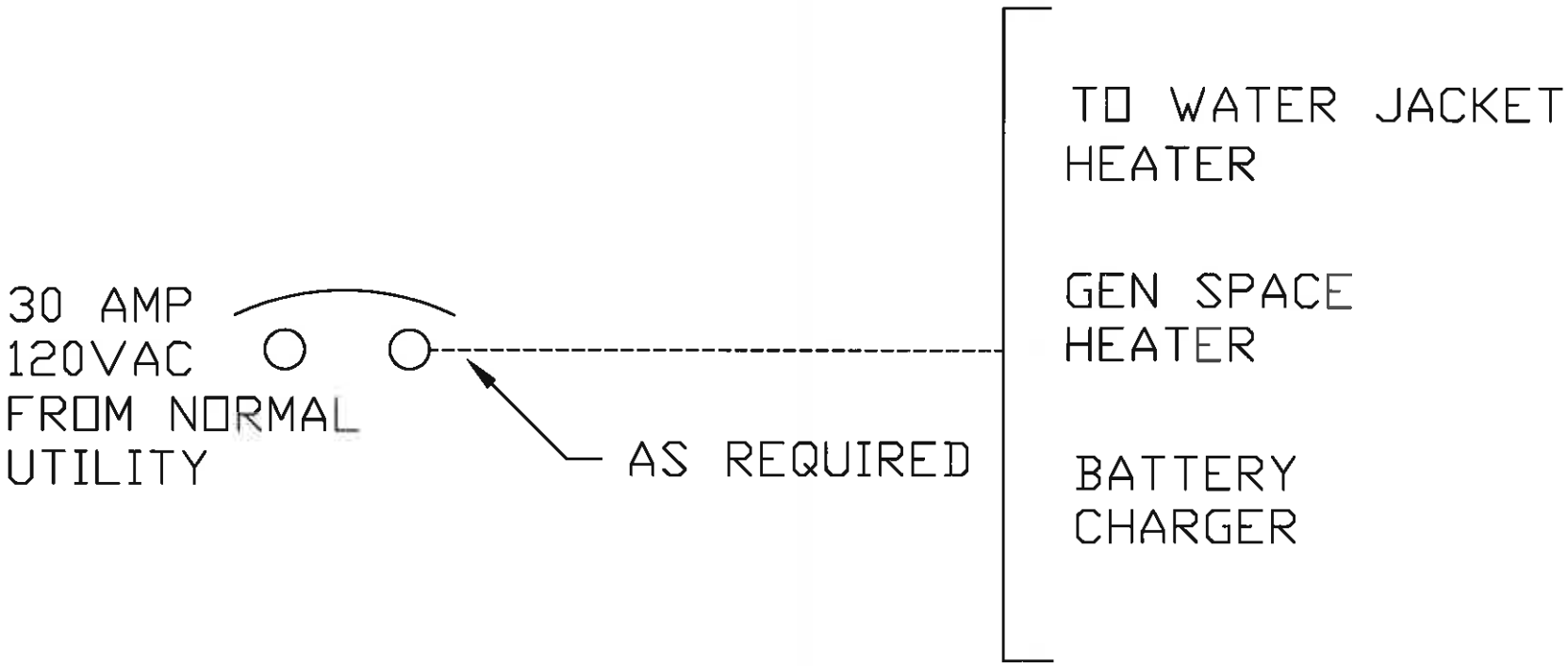

THOMPSON

Thompson Power

19

Effective with sales to the first user on or after August 1, 2014

CATERPILLAR LIMITED WARRANTY

Industrial, Petroleum, Locomotive, and Agriculture Engine Products and Electric Power Generation Products

Worldwide

Caterpillar Inc. or any of its subsidiaries ("Caterpillar") warrants new and remanufactured engines and electric power generation products sold by it (including any products of other manufacturers packaged and sold by Caterpillar), to be free from defects in material and workmanship.

This warranty does not apply engines sold for use in on-highway vehicle or marine applications; engines in machines manufactured by or for Caterpillar; C175, 3500 and 3600 series engines used in locomotive applications; 3000 Family engines, C0.5 through C4.4 and ACERT™ (C6.6, C7, C7.1, C9, C9.3, C11, C13, C15, C18, C27, and C32) engines used in industrial, mobile agriculture and locomotive applications; or Cat® batteries. These products are covered by other Caterpillar warranties.

This warranty is subject to the following:

Warranty Period

- For industrial engines, engines in a petroleum applications or Petroleum Power Systems (excluding petroleum fire pump application), or engines in a Locomotive application, or Uninterruptible Power Supply (UPS) systems, the warranty period is 12 months after date of delivery to the first user.
- For engines used in petroleum fire pump and mobile agriculture applications the warranty period is 24 months after date of delivery to the first user.
- For controls only (EPIC), configurable and custom switchgear products, and automatic transfer switch products, the warranty period is 24 months after date of delivery to the first user.
- For new CG132, CG170 and CG260 series power generation products the warranty period is 24 months/16,000 hours, whichever comes first, after date of delivery to first user.
- For electric power generation products other than CG132, CG170 and CG260 series in prime or continuous applications the warranty period is 12 months. For standby applications the warranty period is 24 months/1000 hours. For emergency standby applications the warranty period is 24 months/400 hours. All terms begin after date of delivery to the first user.
- For all other applications the warranty period is 12 months after date of delivery to the first user.

Caterpillar Responsibilities

If a defect in material or workmanship is found during the warranty period, Caterpillar will, during normal working hours and at a place of business of a Cat dealer or other source approved by Caterpillar:

- Provide (at Caterpillar's choice) new, Remanufactured, or Caterpillar approved repaired parts or assembled components needed to correct the defect.

Note: New, remanufactured, or Caterpillar approved repaired parts or assembled components provided under the terms of this warranty are warranted for the remainder of the warranty period applicable to the product in which installed as if such parts were original components of that product. Items replaced under this warranty become the property of Caterpillar.

- Replace lubricating oil, filters, coolant, and other service items made unusable by the defect.
- Provide reasonable and customary labor needed to correct the defect, including labor to disconnect the product from and reconnect the product to its attached equipment, mounting, and support systems, if required.

For new 3114, 3116, and 3126 engines and electric power generation products (including any new products of other manufacturers packaged and sold by Caterpillar):

- Provide travel labor, up to four hours round trip, if in the opinion of Caterpillar, the product cannot reasonably be transported to a place of business of a Cat dealer or other source approved by Caterpillar (travel labor in excess of four hours round trip, and any meals, mileage, lodging, etc. is the user's responsibility).

For all other products:

- Provide reasonable travel expenses for authorized mechanics, including meals, mileage, and lodging, when Caterpillar chooses to make the repair on-site.

User Responsibilities

The user is responsible for:

- Providing proof of the delivery date to the first user.
- Labor costs, except as stated under "Caterpillar Responsibilities," including costs beyond those required to disconnect the product from and reconnect the product to its attached equipment, mounting, and support systems.
- Travel or transporting costs, except as stated under "Caterpillar Responsibilities."
- Premium or overtime labor costs.
- Parts shipping charges in excess of those that are usual and customary.
- Local taxes, if applicable.
- Costs to investigate complaints, unless the problem is caused by a defect in Caterpillar material or workmanship.
- Giving timely notice of a warrantable failure and promptly making the product available for repair.
- Performance of the required maintenance (including use of proper fuel, oil, lubricants, and coolant) and items replaced due to normal wear and tear.
- Allowing Caterpillar access to all electronically stored data.

Limitations

Caterpillar is not responsible for:

- Failures resulting from any use or installation that Caterpillar judges improper.
- Failures resulting from attachments, accessory items, and parts not sold or approved by Caterpillar.
- Failures resulting from abuse, neglect, and/or improper repair.
- Failures resulting from user's delay in making the product available after being notified of a potential product problem.
- Failures resulting from unauthorized repairs or adjustments, and unauthorized fuel setting changes.
- Damage to parts, fixtures, housings, attachments, and accessory items that are not part of the engine, Cat Selective Catalytic Reduction System or electric power generation product (including any products of other manufacturers packaged and sold by Caterpillar).
- Repair of components sold by Caterpillar that is warranted directly to the user by their respective manufacturer. Depending on type of application, certain exclusions may apply. Consult your Cat dealer for more information.

(Continued on reverse side...)

This warranty covers every major component of the products. Claims under this warranty should be submitted to a place of business of a Cat dealer or other source approved by Caterpillar. For further information concerning either the location to submit claims or Caterpillar as the issuer of this warranty, write Caterpillar Inc., 100 N. E. Adams St., Peoria, IL USA 61629.

Caterpillar's obligations under this Limited Warranty are subject to, and shall not apply in contravention of, the laws, rules, regulations, directives, ordinances, orders, or statutes of the United States, or of any other applicable jurisdiction, without recourse or liability with respect to Caterpillar.

A) For products operating outside of Australia, Fiji, Nauru, New Caledonia, New Zealand, Papua New Guinea, the Solomon Islands and Tahiti, the following is applicable.

NEITHER THE FOREGOING EXPRESS WARRANTY NOR ANY OTHER WARRANTY BY CATERPILLAR, EXPRESS OR IMPLIED, IS APPLICABLE TO ANY ITEM CATERPILLAR SELLS THAT IS WARRANTED DIRECTLY TO THE USER BY ITS MANUFACTURER.

THIS WARRANTY IS EXPRESSLY IN LIEU OF ANY OTHER WARRANTIES, EXPRESS OR IMPLIED, INCLUDING ANY WARRANTY OF MERCHANTABILITY OR FITNESS FOR A PARTICULAR PURPOSE, EXCEPT CATERPILLAR EMISSION-RELATED COMPONENTS WARRANTIES FOR NEW ENGINES, WHERE APPLICABLE. REMEDIES UNDER THIS WARRANTY ARE LIMITED TO THE PROVISION OF MATERIAL AND SERVICES, AS SPECIFIED HEREIN.

CATERPILLAR IS NOT RESPONSIBLE FOR INCIDENTAL OR CONSEQUENTIAL DAMAGES.

CATERPILLAR EXCLUDES ALL LIABILITY FOR OR ARISING FROM ANY NEGLIGENCE ON ITS PART OR ON THE PART OF ANY OF ITS EMPLOYEES, AGENTS OR REPRESENTATIVES IN RESPECT OF THE MANUFACTURE OR SUPPLY OF GOODS OR THE PROVISION OF SERVICES RELATING TO THE GOODS.

IF OTHERWISE APPLICABLE, THE VIENNA CONVENTION ON CONTRACTS FOR THE INTERNATIONAL SALE OF GOODS IS EXCLUDED IN ITS ENTIRETY.

For personal or family use engines or electric power generation products, operating in the USA, its territories and possessions, some states do not allow limitations on how long an implied warranty may last nor allow the exclusion or limitation of incidental or consequential damages. Therefore, the previously expressed exclusion may not apply to you. This warranty gives you specific legal rights and you may also have other rights, which vary by jurisdiction. To find the location of the nearest Cat dealer or other authorized repair facility, call (800) 447-4986. If you have questions concerning this warranty or its applications, call or write:

In USA and Canada: Caterpillar Inc., Engine Division, P. O. Box 610, Mossville, IL 61552-0610. Attention: Customer Service Manager, Telephone (800) 447-4986. Outside the USA and Canada: Contact your Cat dealer.

B) For products operating in Australia, Fiji, Nauru, New Caledonia, New Zealand, Papua New Guinea, the Solomon Islands and Tahiti, the following is applicable:

THIS WARRANTY IS IN ADDITION TO WARRANTIES AND CONDITIONS IMPLIED BY STATUTE AND OTHER STATUTORY RIGHTS AND OBLIGATIONS THAT BY ANY APPLICABLE LAW CANNOT BE EXCLUDED, RESTRICTED OR MODIFIED ("MANDATORY RIGHTS") ALL OTHER WARRANTIES OR CONDITIONS, EXPRESS OR IMPLIED (BY STATUTE OR OTHERWISE), ARE EXCLUDED. WITHOUT LIMITING THE FOREGOING PROVISIONS OF THIS PARAGRAPH, WHERE A PRODUCT IS SUPPLIED FOR BUSINESS PURPOSES, THE CONSUMER GUARANTEES UNDER THE CONSUMER GUARANTEES ACT 1993 (NZ) WILL NOT APPLY.

NEITHER THIS WARRANTY NOR ANY OTHER CONDITION OR WARRANTY BY CATERPILLAR, EXPRESS OR IMPLIED (SUBJECT ONLY TO THE MANDATORY RIGHTS), IS APPLICABLE TO ANY ITEM CATERPILLAR SELLS THAT IS WARRANTED DIRECTLY TO THE USER BY ITS MANUFACTURER.

IF THE MANDATORY RIGHTS MAKE CATERPILLAR LIABLE IN CONNECTION WITH SERVICES OR GOODS, THEN TO THE EXTENT PERMITTED UNDER THE MANDATORY RIGHTS, THAT LIABILITY SHALL BE LIMITED AT CATERPILLAR'S OPTION TO (a) IN THE CASE OF SERVICES, THE SUPPLY OF THE SERVICES AGAIN OR THE PAYMENT OF THE COST OF HAVING THE SERVICES SUPPLIED AGAIN AND (b) IN THE CASE OF GOODS, THE REPAIR OR REPLACEMENT OF THE GOODS, THE SUPPLY OF EQUIVALENT GOODS, THE PAYMENT OF THE COST OF SUCH REPAIR OR REPLACEMENT OR THE ACQUISITION OF EQUIVALENT GOODS.

CATERPILLAR EXCLUDES ALL LIABILITY FOR OR ARISING FROM ANY NEGLIGENCE ON ITS PART OR ON THE PART OF ANY OF ITS EMPLOYEES, AGENTS OR REPRESENTATIVES IN RESPECT OF THE MANUFACTURE OR SUPPLY OF GOODS OR THE PROVISION OF SERVICES RELATING TO THE GOODS.

CATERPILLAR IS NOT LIABLE FOR INCIDENTAL OR CONSEQUENTIAL DAMAGES UNLESS IMPOSED UNDER MANDATORY RIGHTS.

IF OTHERWISE APPLICABLE, THE VIENNA CONVENTION ON CONTRACTS FOR THE INTERNATIONAL SALE OF GOODS IS EXCLUDED IN ITS ENTIRETY.

C) For products supplied in Australia:

IF THE PRODUCTS TO WHICH THIS WARRANTY APPLIES ARE:

- **I PRODUCTS OF A KIND ORDINARILY ACQUIRED FOR PERSONAL, DOMESTIC OR HOUSEHOLD USE OR CONSUMPTION, OR**
- **II PRODUCTS THAT COST AUD 40,000 OR LESS,**

WHERE THOSE PRODUCTS WERE NOT ACQUIRED FOR THE PURPOSE OF RE-SUPPLY OR FOR THE PURPOSE OF USING THEM UP OR TRANSFORMING THEM IN THE COURSE OF PRODUCTION OR MANUFACTURE OR IN THE COURSE OF REPAIRING OTHER GOODS OR FIXTURES, THEN THIS SECTION C APPLIES.

THE FOLLOWING MANDATORY TEXT IS INCLUDED PURSUANT TO THE AUSTRALIAN CONSUMER LAW AND INCLUDES REFERENCES TO RIGHTS THE USER MAY HAVE AGAINST THE DIRECT SUPPLIER OF THE PRODUCTS: OUR GOODS COME WITH GUARANTEES THAT CANNOT BE EXCLUDED UNDER THE AUSTRALIAN CONSUMER LAW. YOU ARE ENTITLED TO A REPLACEMENT OR REFUND FOR A MAJOR FAILURE AND COMPENSATION FOR ANY OTHER REASONABLY FORESEEABLE LOSS OR DAMAGE. YOU ARE ALSO ENTITLED TO HAVE THE GOODS REPAIRED OR REPLACED IF THE GOODS FAIL TO BE OF ACCEPTABLE QUALITY AND THE FAILURE DOES NOT AMOUNT TO A MAJOR FAILURE. THE INCLUSION OF THIS TEXT DOES NOT CONSTITUTE ANY REPRESENTATION OR ACCEPTANCE BY CATERPILLAR OF LIABILITY TO THE USER OR ANY OTHER PERSON IN ADDITION TO THAT WHICH CATERPILLAR MAY HAVE UNDER THE AUSTRALIAN CONSUMER LAW.

TO THE EXTENT THE PRODUCTS FALL WITHIN THIS SECTION C BUT ARE NOT OF A KIND ORDINARILY ACQUIRED FOR PERSONAL, DOMESTIC OR HOUSEHOLD USE OR CONSUMPTION, CATERPILLAR LIMITS ITS LIABILITY TO THE EXTENT IT IS PERMITTED TO DO SO UNDER THE AUSTRALIAN CONSUMER LAW TO, AT ITS OPTION, THE REPAIR OR REPLACEMENT OF THE PRODUCTS, THE SUPPLY OF EQUIVALENT PRODUCTS, OR THE PAYMENT OF THE COST OF SUCH REPAIR OR REPLACEMENT OR THE ACQUISITION OF EQUIVALENT PRODUCTS.

THE WARRANTY SET OUT IN THIS DOCUMENT IS GIVEN BY CATERPILLAR INC. OR ANY OF ITS SUBSIDIARIES, 100 N. E. ADAMS ST, PEORIA, IL USA 61629, TELEPHONE 1 309 675 1000, THE USER IS RESPONSIBLE FOR ALL COSTS ASSOCIATED WITH MAKING A CLAIM UNDER THE WARRANTY SET OUT IN THIS DOCUMENT, EXCEPT AS EXPRESSLY STATED OTHERWISE IN THIS DOCUMENT, AND THE USER IS REFERRED TO THE BALANCE OF THE DOCUMENT TERMS CONCERNING CLAIM PROCEDURES, CATERPILLAR RESPONSIBILITIES AND USER RESPONSIBILITIES.

TO THE EXTENT PERMISSIBLE BY LAW, THE TERMS SET OUT IN THE REMAINDER OF THIS WARRANTY DOCUMENT (INCLUDING SECTION B) CONTINUE TO APPLY TO PRODUCTS TO WHICH THIS SECTION C APPLIES.

©2014 Caterpillar All Rights Reserved
CAT, CATERPILLAR, their respective logos, "Caterpillar Yellow" the "Power Edge" trade dress as well as corporate and product identity used herein, are trademarks of Caterpillar and may not be used without permission.